–LEETOP TECH CO., LTD.–

User Guide

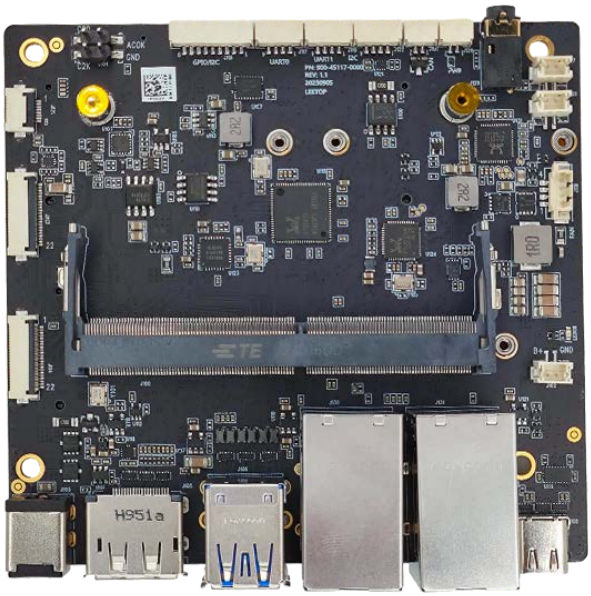

Leetop_A608_Carrier_ Board_ User_Guide_V1.2

NVIDIA ELITE PARTNER

Leetop Technology (Shenzhen) Co., Ltd..
http://www.leetop.top

Notice
Service and Support
Technical Support
Warranties
Warranty content:
DOCUMENT CHANGE HISTORY
Carrier Board specifications
Interface Location
External Interface
Interface details
DC Power Input Jack (W1)
DP Connect （W2 ）
Double layer USB3.0 (W3)
1G network port+USB3.2 (W4/W5)
Type C Connect (W6)
RTC Battary Connector (W7)
LED Indicator(W8)
FAN CON （W9)
Speaker Con (W10)
Speaker Con (W11)
Speaker Signal feedback con (W32)
Analog Microphone con （W33)
Analog Microphone con （W34)
Audio Jack Interface (W12)
Power Key （W13)
CAN （W14)
IIC Interface (W15)
UART Con (W16)
UART Con(W17)
Multifunctional expansion port(W18)
MCU download interface(W19)
Multifunctional expansion port(W20)
Camera Con(W21)
Camera Con(W22)
NVIDIA Orin NX/Orin NANO core module interface(W23)
M.2 KEY E(W24)
Recovery Key(W25)
Reset Key (W26)
5V UART Con(W27)
Multifunctional interface(W28)
SIM card holder(W29)
M.2 KEY_B(W30)
M.2 KEY M(W31)
Module Installation and Removal
Function Introduction
Operating system setup
1.Hardware preparation
2.Environment requirements
3.Recovery mode
4.Install system image
5.Switching working modes
6. Install Jetpack components

Use of xshell
System Configuration
View System Version
Make a backup image
Installation of Jtop tools
Access to Solid State Drives
Developer Tools
JetPack
L4T
DeepStream SDK on Jetson
Isaac SDK
Key features of Jetpack
Sample Applications
Developer Tools
Abbreviations and Definitions

Notice

- Please read manual carefully before install, operate, or transport Leetop device.
- Ensure that the correct power range is being used before powering the device.
- Avoid hot plugging.
- To properly turn off the power, please shut down the Ubuntu system first, and then cut off the power. Due to the particularity of the Ubuntu system, on the Nvidia developer kit, if the power is turned off when the startup is not completed, there will be a 0.03% probability of abnormality, which will cause the device to fail to start. Due to the use of the Ubuntu system, the same problem also exists on the Leetop device.
- Do not use cables or connectors other than described in this manual.
- Do not use Leetop device near strong magnetic fields.
- Backup your data before transportation or Leetop device is idle.
- Recommend to transport Leetop device in its original packaging.
- Warn! This is a Class A product, in a living environment this product may cause radio interference. In this case, the user may be required to take practicable measures against the interference.
- Working in a high temperature environment for a long time, it is not recommended to touch the shell to avoid burns.

ESD Warning

	Electronic components and circuits are sensitive to ElectroStatic Discharge (ESD). When handling any circuit board assemblies including Leetop Tech COM Express carrier assemblies, it is recommended that ESD safety precautions be observed. ESD safe best practices include, but are not limited to : • Leaving circuit boards in their antistatic packaging until they are ready to be installed. **• Using a grounded wrist strap whe handling circuit boards, at a minimum you should touch a grounded metal object to dissipate any static charge that may be present on you.** **• Only handling circuit boards in ESD sa areas, which may include ESD floor and table mats, wrist strap stations and ESD safe lab coats.** **• Avoidin handling circuit boards in carpeted areas.** **• Try t handle the board by the edges, avoiding contact with components.**

Service and Support

Technical Support

Leetop is glad to help you with any questions you may have about our product, or about the use of the technology for your application. The fastest way is sending us an email: service@leetop.top

Warranties

Warranty period: One year from the date of delivery.

Warranty content:

Leetop warrants the product manufactured by us to be free from defects in material and workmanship during warranty period. Please contact service@leetop.top for return material authorization (RMA) prior to returning any items for repair or exchange. The product must be returned in its original packaging to prevent damage during shipping. Before returning any product for repair, it is recommended to back up your data and delete any confidential or personal data.

DOCUMENT CHANGE HISTORY

Document	Version	date	Description of Change
Leetop_A608	V1.0	20230912	Initial release
	V1.1	20231012	USB change
	V1.2	20231214	

Carrier Board specifications

Feature	A608 Carrier for NVIDIA Jetson Orin NX/Orin NANO
Module Compatibility	NVIDIA Jetson Orin NX/Orin NANO
PCB Size / Overall Size	101.5mm x 95mm
Display	1x DP
Ethernet	2x Gigabit Ethernet (10/100/1000)
USB	4x USB 3.2 Type A (Integrated USB 2.0) 1x USB 2.0+3.2 Type C
M.2 KEY M	1x M.2 KEY M(SSD Interface 1X M.2 KEY E(WIFI) Interface 1XM.2 KEY B(4G/5G) Interface
Camera	2X 4 CSI Camera
FAN	1 x FAN(5V PWM)
RTC CON	1X3.0V RTC
CAN	1x CAN (FD)
Audio	1x3.5 Audio Jack 2X MIC 2X SPEAKER 1X SPEAKER FEEDBACK
Function CON	2X IIC; 1X SPI 7X IO 3.3V 2x UART 1X DEBUG 1X POWER 1X RESET 1X RECOVERY
Power Requirements	+9--+20V(MAX 60W) DC Input
Operating Temperature	-25 ℃ to +65 ℃
Weight	0.9970KG
Warranty and Support	1 Year Warranty and Free Support

Interface Location

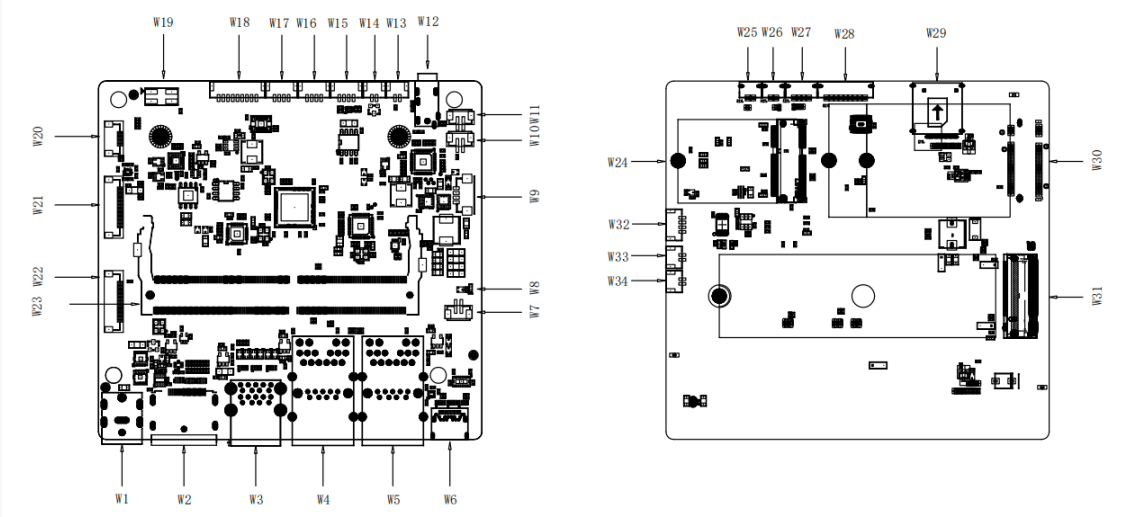

Leetop_A608_Carrier_Board_V1.2

External Interface

Designator	Connector	Description
W1	DC Jack	CON_DCPWR_JACK_006_TH_RA_100X130
W2	DP Connect	CON_6.65mm_DP_020_3VD51207-D7JJ-7H
W3	USB 3.2 Connect	USB3.0 AF double layer 90 degree short body, gold-plated pins 5AU, 19 PIN, HIGH 13.62MM
W4/W5	RJ45 Connect	CONN MAGJACK 1P TD NPOE 10G LED
W6	TYPE C (2.0+3.2)	CON_USB3_TYPEC_30PIN_0.5MM
W7	RTC Connect	CON_1.5MM_2P_SMD battery holder
W8	LED indicator	
W9	5V FAN Connect	1.25MMPITCH_4PIN_SMD_MOLEX
W10/W11	Speaker con	CON_1.5MM_2P_SMD
W12	Audio Jack	3.5 Earphone stand PJ-31060A
W13	POWER KEY	CON, GH1.25_WT_2P
W14	CAN Connect	CON, GH1.25_WT_2P
W15	IIC Connect	CON, GH1.25_WT_4P
W16	UART Connect	CON, GH1.25_WT_4P
W17	UART Connect	CON, GH1.25_WT_4P
W18	Multifunctional expansion port	CON, GH1.25_WT_9P A1253WT09B
W19	MCU download interface	CON_2X2_2.54_SMD
W20	Multifunctional expansion port	ZIF_0.5PITCH_8P_2MM
W21/W22	CAMERA Connect	ZIF_0.5PITCH_22P_2MM
W23	NVIDIA Orin NX/Orin NANO core module interface	TE 2309413-1
W24	M2_KEY_E (WIFI)	CON_067_M2_KEY_E_C
W25	RECOVERY KEY	GH1.25_WT_2P
W26	RESET KEY	GH1.25_WT_2P
W27	UART Connect	GH1.25_WT_4P
W28	Multifunctional interface	GH1.25_WT_9P
W29	SIM card holder	SIM-12707H137
W30	M2_KEY_B(4G/5G)	CON_067_M2_KEY_B_30X42_52

Designator	Connector	Description
W31	M2_KEY_M(SSD)	CON_067_SMT_M2_KEY_M
W32	Speaker signal feedback	GH1.25_WT_4P
W33	Analog Microphone	GH1.25_WT_2P
W34	Analog Microphone	GH1.25_WT_2P

Interface details

DC Power Input Jack (W1)

PIN	Signal Name	PIN	Signal Name
1	Positive power supply	2.3.4.5.6	GND

After the power is plugged in and turned on normally, the power LED lights up (red) Note: Power input range: DC+9V-20V (MAX 60W)

DP Connect (W2)

PIN	Signal Name	PIN	Signal Name
1	DP_CON_LANE0_P	2	GND
3	DP_CON_LANE0_N	4	DP_CON_LANE1_P
5	GND	6	DP_CON_LANE1_N
7	DP_CON_LANE2_P	8	GND
9	DP_CON_LANE2_N	10	DP_CON_LANE3_P
11	GND	12	DP_CON_LANE3_N
13	DP_MODE	14	HDMI_CEC_CON
15	DP_CON_AUX_P	16	GND
17	DP_CON_AUX_N	18	DP_HPD_CON
19	GND	20	VDD_3V3_DP

Double layer USB3.0 (W3)

PIN	Signal Name	PIN	Signal Name
1	VBUS	2	USB 2.0 D-
3	USB 2.0 D+	4	GND
5	SSRX-	6	SSRX+
7	GND	8	SSTX-
9	SSTX+	10	VBUS
11	USB 2.0 D-	12	USB 2.0 D+
13	GND	14	SSRX-
15	SSRX+	16	GND
17	SSTX-	18	SSTX+

1G network port+USB3.2 (W4/W5)

PIN	Signal Name	PIN	Signal Name
1	VDD_5V0_IO_SYS_1	2	USB_DN
3	USB_DP	4	GND
5	USB_SSRX_N	6	USB_SSRX_P
7	GND	8	USB_SSTX_N
9	USB_SSTX_P		
PIN	**Signal Name**	**PIN**	**Signal Name**
1	TP0+	2	TP0-
3	TP1+	4	TP2+
5	TP2-	6	TP1-
7	TP3+	8	TP3-

Type C Connect (W6)

PIN	Signal Name	PIN	Signal Name
A1, A12, B1, B12	GND	A4, A9, B4, B9	5V VBUS
A5	CC1	B5	CC2
A8	NC	B8	NC
B10	SSRX1-	B11	SSRX1+
A3	SSTX1-	A2	SSTX1+
A10	SSRX2-	A11	SSRX2+
B3	SSTX2-	B2	SSTX2+
A7, B7	U.SB D-	A6.B6	USB0_P

RTC Battary Connector (W7)

PIN	Signal Name	PIN	Signal Name
1	B+	2	GND

LED Indicator(W8)

Red represents the power indicator light.

FAN CON (W9)

PIN	Signal Name	PIN	Signal Name
1	GND	2	VDD_5V
3	FAN_TACH	4	FAN_PWM

Speaker Con (W10)

PIN	Signal Name	PIN	Signal Name
1	SPO_RN	2	SPO_RP

Speaker Con (W11)

PIN	Signal Name	PIN	Signal Name
1	SPO_LN	2	SPO_LP

Speaker Signal feedback con (W32)

PIN	Signal Name	PIN	Signal Name
1	SPO_LP	2	SPO_LN
3	SPO_RP	4	SPO_RN

Analog Microphone con (W33)

PIN	Signal Name	PIN	Signal Name
1	GND	2	Micro+(IN2)

Analog Microphone con（W34)

PIN	Signal Name	PIN	Signal Name
1	GND	2	Micro+(IN3)

Audio Jack Interface (W12)

PIN	Signal Name	PIN	Signal Name
1	NC	2	IN1D_P
3	GND	4	HPO_R
5.7	AUD_HP_JD	6	HPO_L

Power Key（W13)

PIN	Signal Name	PIN	Signal Name
1	GND	2	PWR_BTN

CAN（W14)

PIN	Signal Name	PIN	Signal Name
1	CAN_L	2	CAN_H

IIC Interface (W15)

PIN	Signal Name	PIN	Signal Name
1	GND	2	3.3V
4	ID_I2C_SCL	5	ID_I2C_SDA

UART Con (W16)

PIN	Signal Name	PIN	Signal Name
1	GND	2	VDD_3V3_SYS
3	UART1_TXD_3V3	4	UART1_RXD_3V3

UART Con(W17)

PIN	Signal Name	PIN	Signal Name
1	GND	2	VDD_3V3_SYS
3	UART0_TXD_3V3	4	UART0_RXD_3V3

Multifunctional expansion port(W18)

PIN	Signal Name	PIN	Signal Name
1	GND	2	VDD_3V3_SYS
3	VDD_5V_SYS	4	SPI1_MISO_3V3
5	GPIO_12_3V3	6	I2C1_SCL
7	I2C1_SDA	8	GPIO_11_3V3
9	GPIO_09_3V3	10	

MCU download interface(W19)

PIN	Signal Name	PIN	Signal Name
1	C2D	2	C2K
3	GND	4	ACOK

Note: PIN4 (ACOK) and PIN3 (GND) can be turned off and automatically turned on when powered on due to a short circuit.

Multifunctional expansion port(W20)

PIN	Signal Name	PIN	Signal Name
1	PIN112_INT	2	I2C2_SCL
3	I2C2_SDA	4	PIN110_PRO
5	PIN104_RST	6	GND
7	GND	8	VDD_1V8

Camera Con(W21)

PIN	Signal Name	PIN	Signal Name
1	VDD_3V3_SYS	2	CAM0_I2C_SDA
3	CAM0_I2C_SCL	4	GND
5	CAM0_MCLK	6	CAM0_PWDN_LS
7	GND	8	CSI1_D1_P
9	CSI1_D1_N	10	GND
11	CSI1_D0_P	12	CSI1_D0_N
13	GND	14	CSI0_CLK_P
15	CSI0_CLK_N	16	GND
17	CSI0_D1_P	18	CSI0_D1_N
19	GND	20	CSI0_D0_P
21	CSI0_D0_N	22	GND

Camera Con(W22)

PIN	Signal Name	PIN	Signal Name
1	VDD_3V3_SYS	2	CAM1_I2C_SDA
3	CAM1_I2C_SCL	4	GND
5	CAM1_MCLK	6	CAM1_PWDN_LS
7	GND	8	CSI3_D1_P
9	CSI3_D1_N	10	GND
11	CSI2_D0_P	12	CSI2_D0_N
13	GND	14	CSI2_CLK_P
15	CSI2_CLK_N	16	GND
17	CSI2_D1_P	18	CSI2_D1_N
19	GND	20	CSI2_D0_P
21	CSI2_D0_N	22	GND

NVIDIA Orin NX/Orin NANO core module interface(W23)

260PIN connector, mainly used for NVIDIA Jetson Orin NX/NANO core module and Connection between Leetop_ A608 carrier plates

M.2 KEY E(W24)

PIN	Signal Name	PIN	Signal Name
1	GND	2	VDD_3V3_SYS
3	USB_DP	4	VDD_3V3_SYS
5	USB_DN	6	NC
7	GND	8	I2S1_SCLK
9	NC	10	I2S1_LRCK
11	NC	12	I2S1_SDIN
13	NC	14	I2S1_SDOUT
15	NC	16	NC
17	NC	18	GND
19	NC	20	BT_M2_WAKE_AP
21	NC	22	UART0_RXD
23	NC	24	UART0_TXD
25	GND	26	UART0_CTS
27	PCIE1_TX0_P	28	UART0_RTS
29	PCIE1_TX0_N	30	NC
31	GND	32	NC
33	PCIE1_RX0_P	34	NC
35	PCIE1_RX0_N	36	NC
37	GND	38	NC
39	PCIE1_CLK_P	40	NC
41	PCIE1_CLK_N	42	SUSCLK_32KHZ_BUF
43	GND	44	PCIE1_RST
45	PCIE1_CLKREQ	46	W_DISABLE2
47	PCIE_WAKE	48	W_DISABLE1
49	GND	50	I2C2_SDA
51	NC	52	I2C2_SCL
53	NC	54	M2_E_ALERT
55	GND	56	NC
57	NC	58	NC
59	NC	60	NC

PIN	Signal Name	PIN	Signal Name
61	GND	62	NC
63	NC	64	VDD_3V3_SYS
65	NC	66	VDD_3V3_SYS
67	GND	68	GND
69	GND	70	

Recovery Key(W25)

PIN	Signal Name	PIN	Signal Name
1	GND	2	RECOVER

Reset Key (W26)

PIN	Signal Name	PIN	Signal Name
1	GND	2	SYS_RST

5V UART Con(W27)

PIN	Signal Name	PIN	Signal Name
1	GND	2	VDD_5V_SYS
3	UART2_TXD_LS	4	UART2_RXD_LS

Multifunctional interface(W28)

PIN	Signal Name	PIN	Signal Name
1	GND	2	VDD_3V3_SYS
3	SPI0_MOSI_3V3	4	SPI0_SCK_3V3
5	SPI0_MISO_3V3	6	SPI0_CS0_3V3
7	SPI0_CS1_3V3	8	GPIO_13_3V3
9	GPIO_07_3V3		

SIM card holder(W29)

PIN	Signal Name	PIN	Signal Name
1	USIM_VDD	2	USIM_RST
3	USIM_CLK	4	USIM_DET
5	GND	6	USIM_VDD
7	USIM_DATA	8	GND

M.2 KEY_B(W30)

PIN	Signal Name	PIN	Signal Name
1	NC	2	VDD_3V8
3	GND	4	VDD_3V8
5	GND	6	POWER_ON
7	USB_DP	8	W_DISABLE1#
9	USB_DN	10	STATUS
11	GND	20	NC
21	NC	22	NC
23	NC	24	NC
25	NC	26	NC
27	GND	28	NC
29	USB_SSRX_N	30	USIM_RST
31	USB_SSRX_P	32	USIM_CLK
33	GND	34	USIM_DATA
35	USB_SSTX_N	36	USIM_VDD
37	USB_SSTX_P	38	NC
39	GND	40	NC
41	NC	42	NC
43	NC	44	NC
45	GND	46	NC
47	NC	48	NC
49	NC	50	NC
51	GND	52	NC
53	NC	54	NC
55	NC	56	NC
57	GND	58	NC
59	NC	60	NC
61	NC	62	NC
63	NC	64	NC
65	NC	66	USIM_DET
67	RESET	68	NC

PIN	Signal Name	PIN	Signal Name
69	NC	70	VDD_3V8
71	GND	72	VDD_3V8
73	GND	74	VDD_3V8

M.2 KEY M(W31)

PIN	Signal Name	PIN	Signal Name
1	GND	2	VDD_3V3
3	GND	4	VDD_3V3
5	UPHY0_RX4_N	6	NC
7	UPHY0_RX4_P	8	NC
9	GND	10	NC
11	UPHY0_TX4_N	12	VDD_3V3
13	UPHY0_TX4_P	14	VDD_3V3
15	GND	16	VDD_3V3
17	UPHY0_RX5_N	18	VDD_3V3
19	UPHY0_RX5_P	20	NC
21	GND	22	NC
23	UPHY0_TX5_N	24	NC
25	UPHY0_TX5_P	26	NC
27	GND	28	NC
29	UPHY_RX10_N	30	NC
31	UPHY_RX10_P	32	NC
33	GND	34	NC
35	UPHY_TX10_N	36	NC
37	UPHY_TX10_P	38	NC
39	GND	40	I2C_GP2_CLK
41	UPHY_RX11_N	42	I2C_GP2_DAT
43	UPHY_RX11_P	44	GPIO34_M2_KEYM_ALERT
45	GND	46	NC
47	UPHY_TX11_N	48	NC
49	UPHY_TX11_P	50	PCIE4_RST_N
51	GND	52	PCIE4_CLKREQ_N
53	PCIE4_CLK_N	54	PCIE_WAKE_N
55	PCIE4_CLK_P	56	UFS0_REF_CLK
57	GND	58	UFS0_RST_N
59	NC	60	32.768KHZ

PIN	Signal Name	PIN	Signal Name
61	NC	62	VDD_3V3
63	GND	64	VDD_3V3
65	GND	66	VDD_3V3
67	GND	68	GND

Module Installation and Removal

- In order to properly install the Jetson Orin NX/Orin Nano series module, please follow the following sequence and installation hardware instructions。

1. The connectors should be parallel to each other when plugged.
2. Use smooth movements during docking (no mechanical impact, knocking, hammering).
3. e PCB operators.
4. The top and bottom PCBs should be connected with bolts to improve reliability.
5. Secure from the top of the module with M2 screws (4x). Torque the screws to 2.5 lb/in.

- If a clamp is used for mating, the clamp should hold the mated connector within ±2 degrees. Additionally, the clamp should allow the connectors to become parallel as the mating process proceeds.
- In order to properly disassemble the Jetson Orin NX/Orin Nano series module, please follow the following sequence and installation hardware instructions.

1. The PCB design needs to have adequate finger accessibility/space requirements to hold the board for demolition.
2. Remove the mounting screws (2) from the top of the module.
3. Shake the top plate several times, no more than ±3 degrees, to gradually disengage the connector.
4.

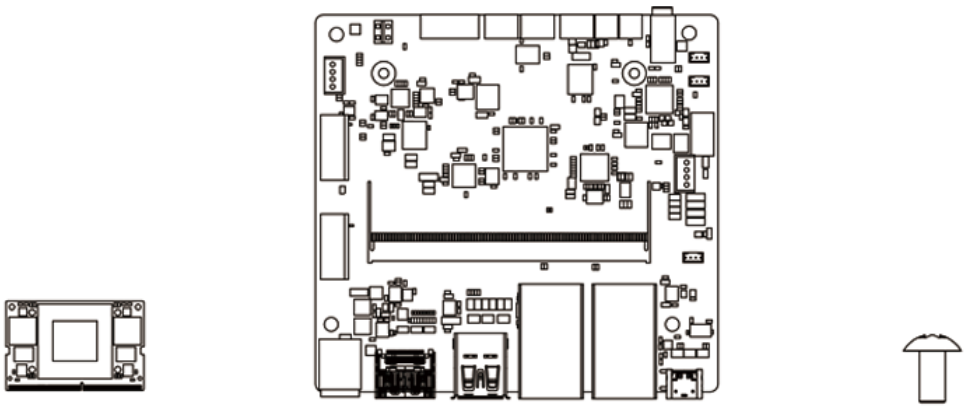

ORIN NX Module*1 **A608 PCBA *1** **M2*4 Flat head screws *2**

Pin direction of the connector

The symbol pins of the 260 pin connector on the carrier board are mirrored, so that when the module and the carrier board connectors are docked, the pin numbers are consistent (see the figure below). The direction shown in the figure matches the upright position and layout file on the carrier board.

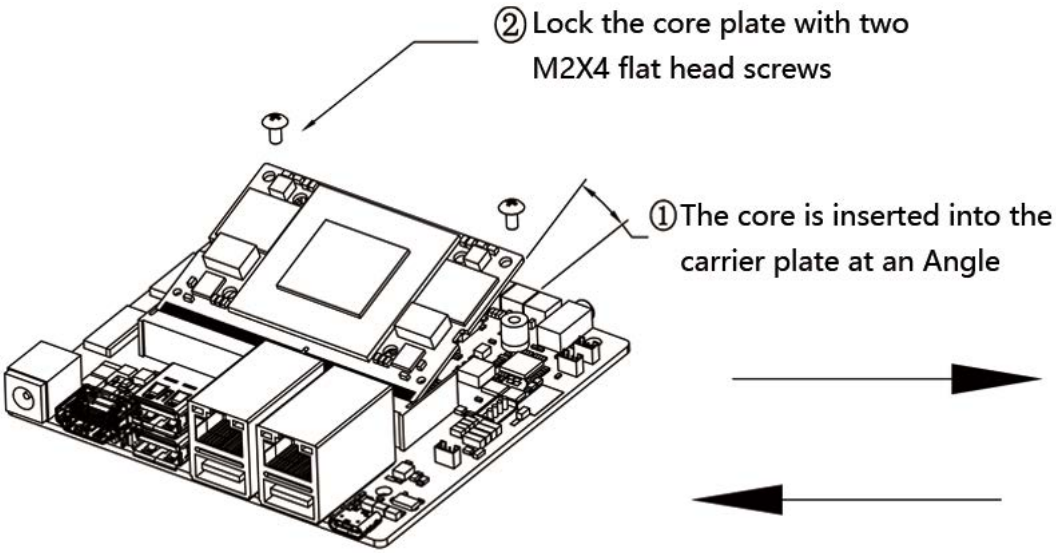

Assembly drawing

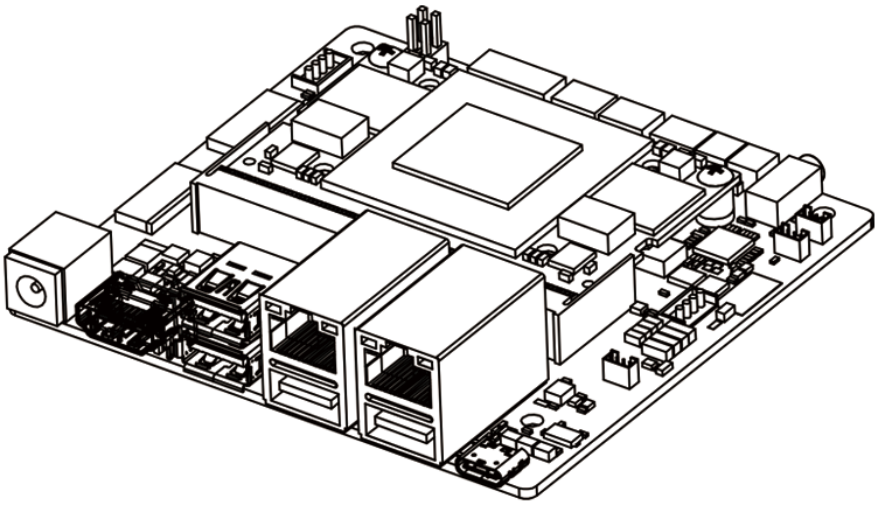

Finished product

Figure

Function Introduction

Operating system setup

1.Hardware preparation

- Ubuntu 18.04/20.04 PC x1
- Type C data cable x1

2.Environment requirements

1.Download the system image package to the PC host of the Ubuntu18.04 system:

Programming steps:

1. Use a USB cable to connect the USB Type-A of the PC of the Ubuntu18.04/20.04 system to the Type C of the Leetop_A608 Development System;
2. Power on the Leetop_A608 Development System and enter Recovery mode;
3. Open the Nvidia-SDK-Manager on the PC, as shown in the figure below, select Jetson Orin NX/Orin Nano in the interface to download the Jetpack5.xx system image package and development tools, or download the latest from https://developer.nvidia.com/embedded/downloads Example filesystems for the Jetson Linux distribution and the Jetson Development Kit. (Jetson Linux Driver Package (L4T)).
4. Download the matching driver:

   Link: https://pan.baidu.com/s/1fXAcDyI7n5g1VKMc4FQSSw

   Extraction code: oz9h

   > (Please download the corresponding driver files according to the actual needs of the device)

Downloads and Links

	Jetson Orin modules and developer kit	Jetson Xavier modules and developer kits
DRIVERS	Driver Package (BSP)	
	Sample Root Filesystem	

```
#When the corresponding version cannot be queried using the latest version of SDK, this command can be used to obtain
sdkmanager --archivedeversions
```

> Please contact us for the rest of the information：service@leetop.top

2. Unzip the downloaded image package and enter the Linux for Tegra(L4T) directory

```
sudo mkdir [$path] #Create a folder and freely name the path
cd [$path] #Enter folder
tar xf Jetson_Linux_R35.3.1_aarch64.tbz2
cd Linux_for_tegra/rootfs/
sudo tar xpf Tegra_Linux_Sample-Root-Filesystem_R35.3.1_aarch64.tbz2
cd ..
sudo ./apply_binaries.sh
sudo ./tools/l4t_flash_prerequisites.sh
#Replace Driver Package
sudo cp -r 608_xxx/Linux_for_tegra/* Linux_for_tegra/
```

3. Enter this command on a Linux host to install (flash) the Jetson version into the Jetson development kit.

   Flash to NVMe:

```
#orin nx/orin nano flash to nvme
sudo ./tools/kernel_flash/l4t_initrd_flash.sh --external-device nvme0n1p1 \
  -c tools/kernel_flash/flash_l4t_external.xml -p "-c bootloader/t186ref/cfg/flash_t234_qspi.xml" \
  --showlogs --network usb0 jetson-orin-nano-devkit internal
```

   Flash to USB:

```
#orin nx/orin nano flash to USB:
cd Linux_for_tegra/
sudo ./tools/kernel_flash/l4t_initrd_flash.sh --external-device sda1 \
  -c tools/kernel_flash/flash_l4t_external.xml -p "-c bootloader/t186ref/cfg/flash_t234_qspi.xml" \
  --showlogs --network usb0 jetson-orin-nano-devkit internal
```

   Flash to SD:

```
#orin nano flash to SD
sudo ./tools/kernel_flash/l4t_initrd_flash.sh --external-device mmcblk1p1 \
  -c tools/kernel_flash/flash_l4t_external.xml -p "-c bootloader/t186ref/cfg/flash_t234_qspi.xml" \
  --showlogs --network usb0 jetson-orin-nano-devkit internal
```

3.Recovery mode

The system can be updated via USB, and the update needs to enter the USB Recovery mode. In USB Recovery mode, you can perform file system update, kernel update, boot loader update, BCT update and other operations.

Please follow the steps in the software update manual to update the system

Steps to enter Recovery Mode:

1. Turn off the system power, please ensure that the power is turned off instead of entering standby mode.
2. Use the Type C to USB Type A cable to connect the carrier and host.
3. Power up the system
4. (Press the power button as needed) While holding down the Recovery button, press and release the Reset button, wait for 2 seconds to release the Recovery button.
5. Open a terminal window on your host computer and enter command `lsusb`. The Jetson module is in Force Recovery Mode if you see the message:

   ```
   Bus <bbb> Device <ddd>: ID 0955: <nnnn> Nvidia Corp.
   ```

   Where

   = `<bbb>` is any three-digit number

   = `<ddd>` is any three-digit number

   - `<nnnn>` is a four-digit number that represents the type of your Jetson module:
     - `7023` for Jetson AGX Orin (P3701-0000 with 32GB)
     - `7023` for Jetson AGX Orin (P3701-0005 with 64GB)
     - `7223` for Jetson AGX Orin (P3701-0004 with 32GB)
     - `7323` for Jetson Orin NX (P3767-0000 with 16GB)
     - `7423` for Jetson Orin NX (P3767-0001 with 8GB)
     - `7523` for Jetson Orin Nano (P3767-0003 and P3767-0005 with 8GB)
     - `7623` for Jetson Orin Nano (P3767-0004 with 4GB)
     - `7019` for Jetson AGX Xavier (P2888-0001 with 16GB)
     - `7019` for Jetson AGX Xavier (P2888-0004 with 32GB)
     - `7019` for Jetson AGX Xavier (P2888-0005 with 64GB)
     - `7019` for Jetson AGX Xavier Industrial (P2888-0008)
     - `7e19` for Jetson Xavier NX (P3668)

> **Note:**
>
> When entering USB Recovery mode, the system will not start and there will be no debugging information output from the serial port.

4.Install system image

a) Connect USB type-A of Ubuntu 18.04/20.04 Host to Type C of Leetop_A608;

b) Power up Leetop_A608 and enter Recovery mode(RCM);

c) The PC Host enters the L4T directory and executes the flashing instruction：(Flash to NVMe)

```
cd Linux_for_tegra/
#orin nx/orin nano flash to nvme
sudo ./tools/kernel_flash/l4t_initrd_flash.sh --external-device nvme0n1p1 \
  -c tools/kernel_flash/flash_l4t_external.xml -p "-c bootloader/t186ref/cfg/flash_t234_qspi.xml" \
  --showlogs --network usb0 jetson-orin-nano-devkit internal
```

d) After flashing, power on Leetop_A608 again and log in to the system.

5.Switching working modes

After logging in to the system, you can click on the operation modification in the upper right corner of the system interface, as shown in the figure：

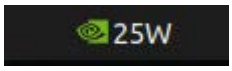

Alternatively, switch by entering the following command in the terminal：

```
#Switch to mode 0, use the -q parameter to view the current mode
sudo nvpmodel -m 0
```

6. Install Jetpack components

```
sudo apt update
sudo reboot
sudo apt install nvidia-jetpack
```

Use of xshell

Xshell is a powerful security terminal emulation software, it supports SSH1, SSH2, and TELNET protocol of Microsoft Windows platform. Xshell's secure connection to remote hosts through the Internet and its innovative design and features help users enjoy their work in complex network environments. Xshell can be used to access servers under different remote systems under the Windows interface, so as to better achieve the purpose of remote control of the terminal. xshell is not necessary, but it can better assist us in using equipment. It can link your Windows system with your Ubuntu system, allowing you to operate your Linux system under Windows system. To install xshell, you can download and install it by searching Baidu on the Internet. (When the product cannot enter the desktop system, you can also use xshell to perform remote control and modify configuration errors).

Open Xshell

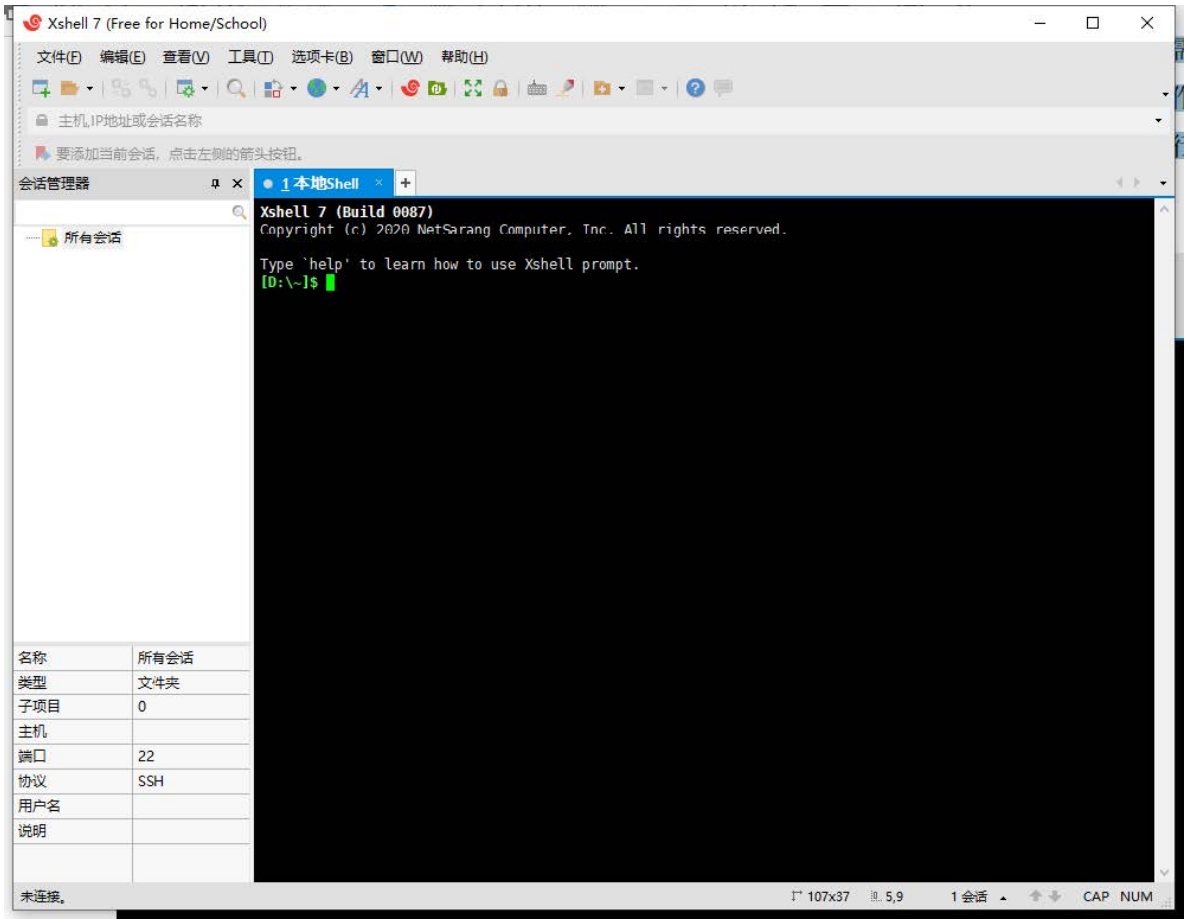

- Newly built

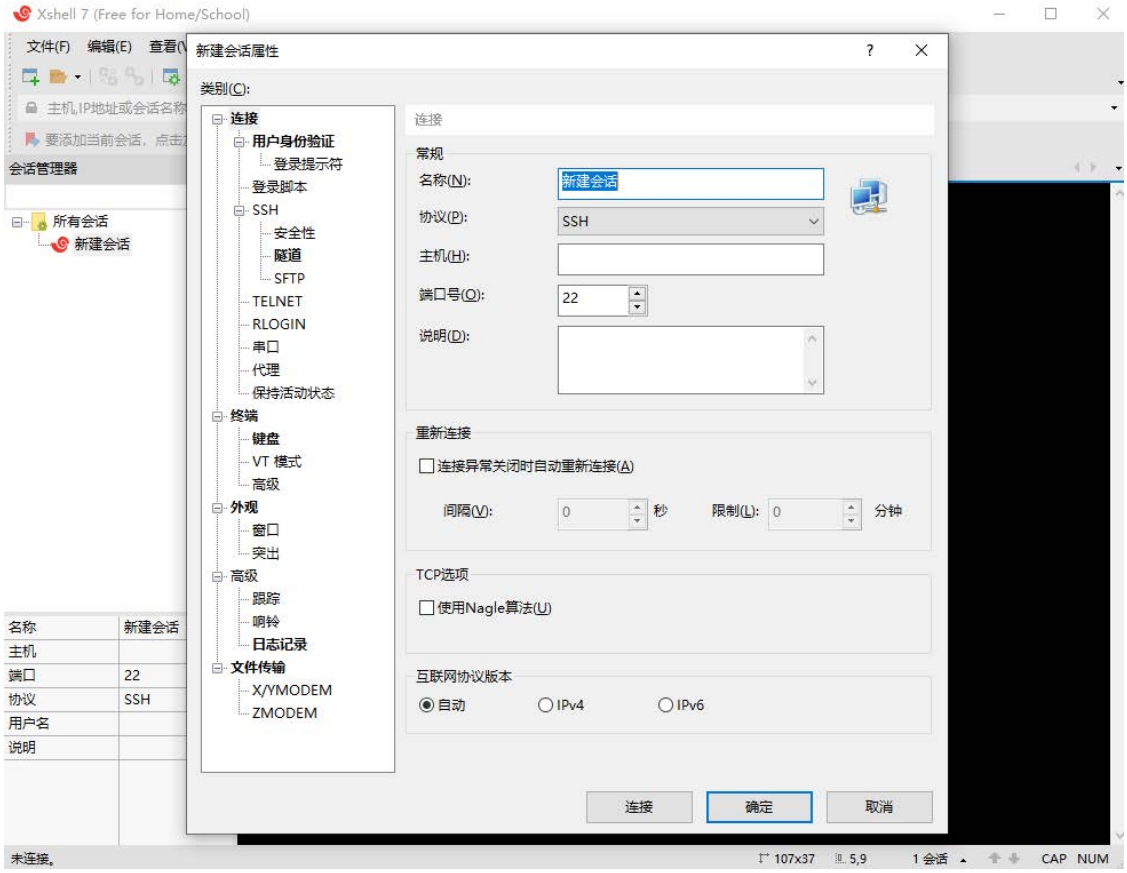

- Fill in the name and host ip (under normal circumstances, you can connect through the network ip, if you don't know the ip, you can connect the computer and the OTG port of the device through the usb data cable, and fill in the fixed ip to connect)

```
192.168.55.1
```

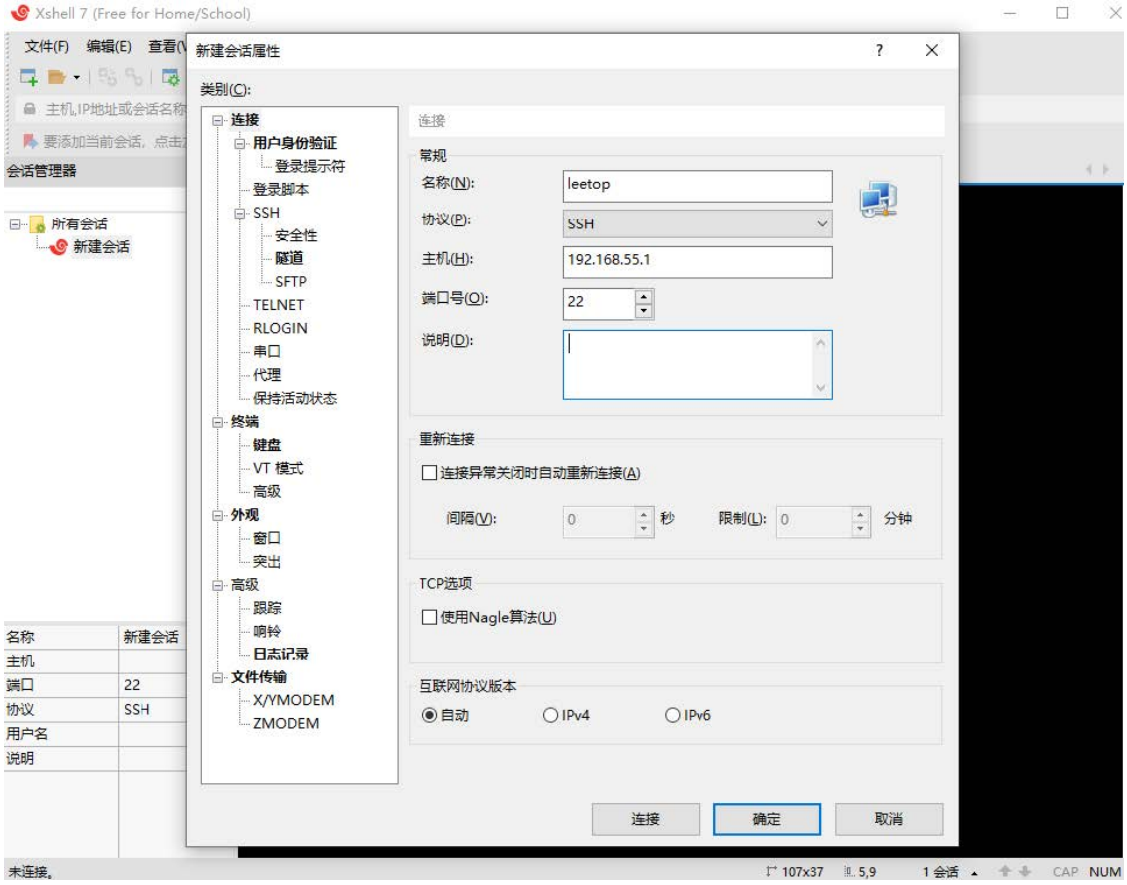

- Enter user and password

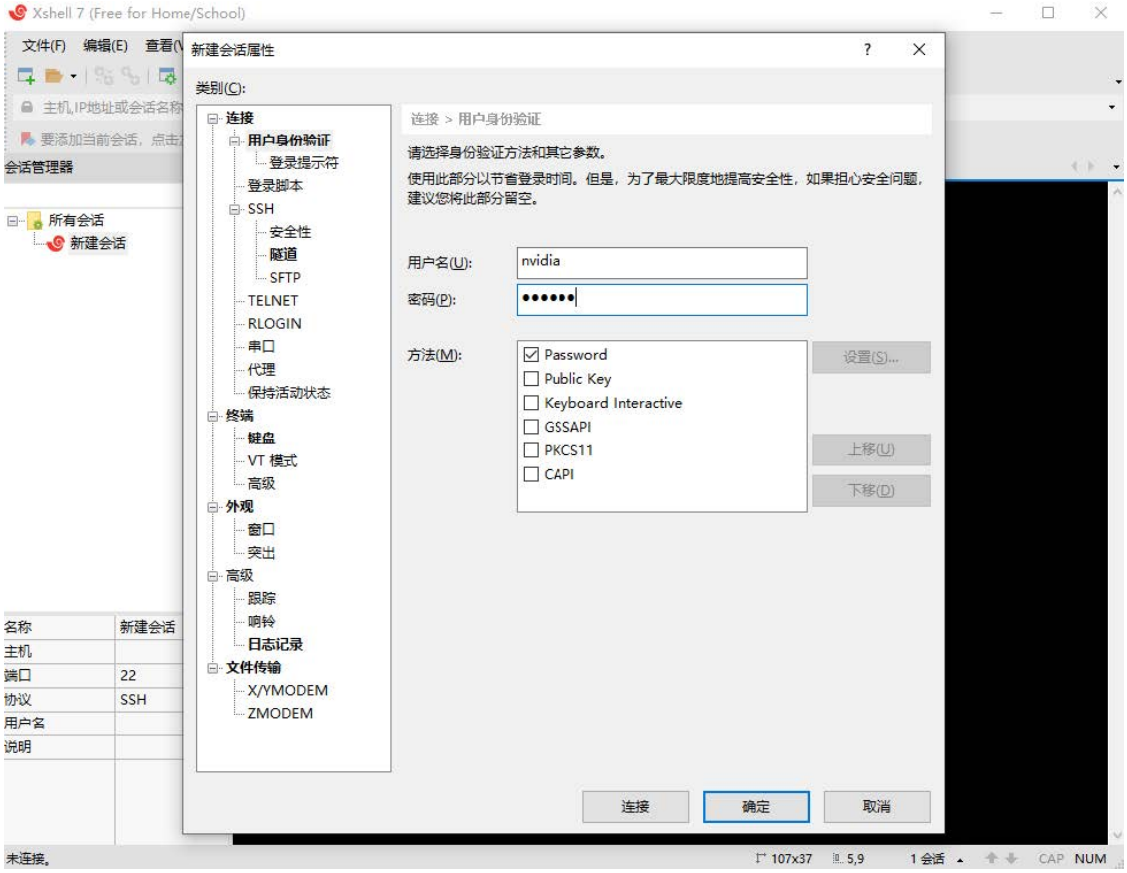

- Click Connect to enter the command line interface

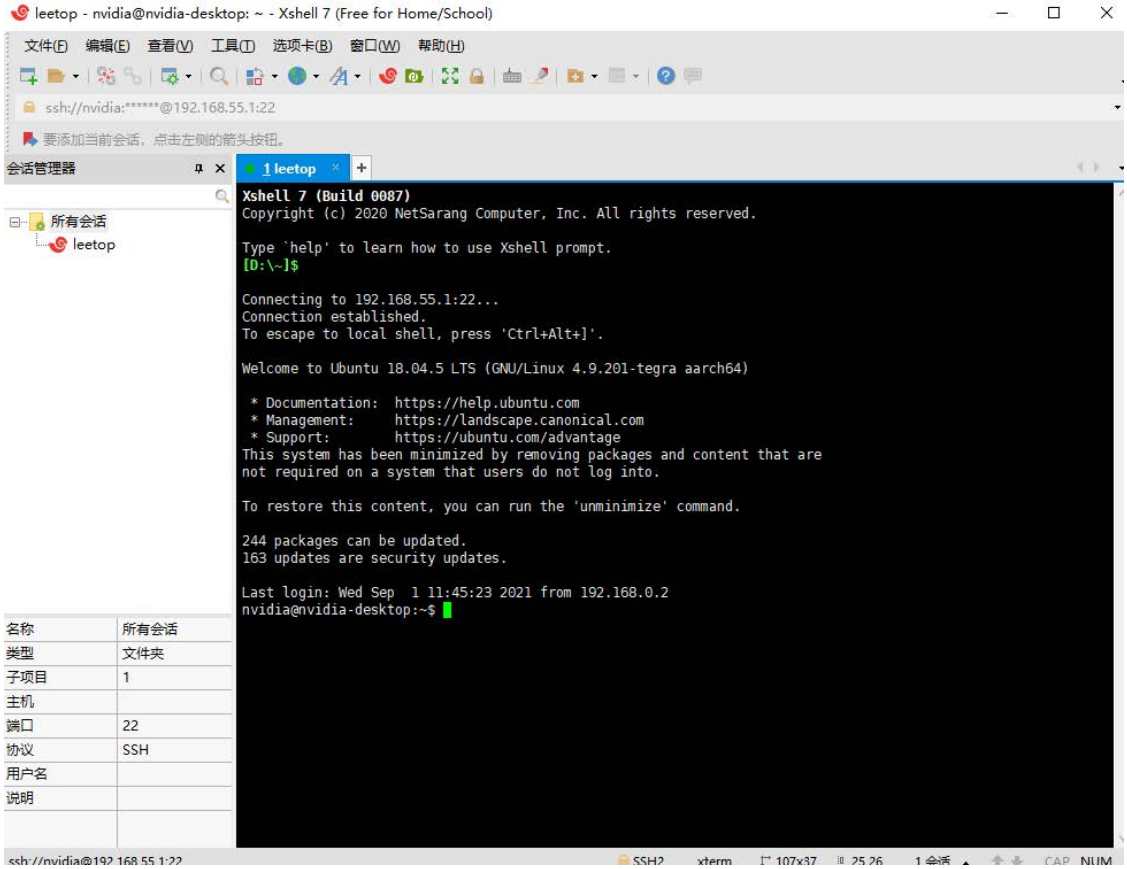

- Operate jetson devices remotely through xshell

leetop - nvidia@nvidia-desktop: ~ - Xshell 7 (Free for Home/School)

文件(F) 编辑(E) 查看(V) 工具(T) 选项卡(B) 窗口(W) 帮助(H)

ssh://nvidia:******@192.168.55.1:22

要添加当前会话，点击左侧的箭头按钮。

会话管理器

所有会话

leetop

名称	所有会话
类型	文件夹
子项目	1
主机	
端口	22
协议	SSH
用户名	
说明	

1 leetop

```
Last login: Wed Sep  1 11:45:23 2021 from 192.168.0.2
nvidia@nvidia-desktop:~$ ll
total 212
drwxr-xr-x 23 nvidia nvidia  4096 9月   1 14:34 ./
drwxr-xr-x  3 root   root    4096 8月  24 09:34 ../
-rw-------  1 nvidia nvidia 19998 9月   1 14:36 .bash_history
-rw-r--r--  1 nvidia nvidia   220 8月  24 09:34 .bash_logout
-rw-r--r--  1 nvidia nvidia  3881 8月  24 15:56 .bashrc
drwx------ 14 nvidia nvidia  4096 8月  31 11:42 .cache/
drwx------ 20 nvidia nvidia  4096 8月  31 11:44 .config/
drwxrwxr-x  3 nvidia nvidia  4096 8月  25 10:50 cuda10.2_trt7.1_jp4.4/
-rw-rw-r--  1 nvidia nvidia 33831 8月  25 10:39 cuda10.2_trt7.1_jp4.4-20210209T001118Z-001.zip
drwxrwxr-x  5 nvidia nvidia  4096 8月  31 11:54 deepstream_pose_estimation/
drwxr-xr-x  2 nvidia nvidia  4096 8月  24 16:01 Desktop/
drwxr-xr-x  2 nvidia nvidia  4096 8月  24 09:36 Documents/
drwxr-xr-x  2 nvidia nvidia  4096 8月  24 13:57 Downloads/
-rw-r--r--  1 nvidia nvidia  8980 8月  24 09:34 examples.desktop
drwx------  2 nvidia nvidia  4096 8月  24 16:01 .gconf/
drwx------  3 nvidia nvidia  4096 8月  24 15:52 .gnupg/
-rw-------  1 nvidia nvidia  5254 9月   1 14:35 .ICEauthority
drwxrwxr-x  6 nvidia nvidia  4096 8月  31 14:36 jetson_benchmarks/
drwx------  3 nvidia nvidia  4096 8月  24 09:36 .local/
drwxr-xr-x  2 nvidia nvidia  4096 8月  24 09:36 Music/
drwx------  4 nvidia nvidia  4096 8月  25 10:10 .nv/
drwxr-xr-x  2 nvidia nvidia  4096 8月  24 09:36 Pictures/
drwx------  3 nvidia nvidia  4096 8月  24 10:02 .pki/
-rw-r--r--  1 nvidia nvidia   807 8月  24 09:34 .profile
drwxr-xr-x  2 nvidia nvidia  4096 8月  24 09:36 Public/
drwxrwxr-x  7 nvidia nvidia  4096 8月  25 10:25 redaction_with_deepstream/
drwx------  2 nvidia nvidia  4096 8月  25 10:21 .ssh/
drwxrwxr-x  2 nvidia nvidia  4096 8月  31 11:50 streams/
-rw-r--r--  1 nvidia nvidia     0 8月  24 09:40 .sudo_as_admin_successful
drwxr-xr-x  2 nvidia nvidia  4096 8月  24 09:36 Templates/
-rwxr-xr-x  1 nvidia nvidia  1046 8月  24 16:24 tmp_NV_L4T_MULTIMEDIA_API_TARGET_POST_INSTALL_T186_COMP.sh*
drwxr-xr-x  2 nvidia nvidia  4096 8月  26 10:13 Videos/
-rw-------  1 nvidia nvidia 12214 8月  26 09:49 .viminfo
-rw-rw-r--  1 nvidia nvidia   950 8月  31 14:40 .wget-hsts
```

ssh://nvidia@192.168.55.1:22 SSH2 xterm 107x37 37,26 1 会话 CAP NUM

System Configuration

Default username: nvidia Password: nvidia

- ***NVIDIA Linux For Tegra (L4T)***

  The motherboard supports native NVIDIA Linux For Tegra (L4T) Builds. DP, Gigabit Ethernet, USB3.0, USB, serial port, GPIO, and I2C bus are all supported and can run directly on A608 without any changes

  Detailed instructions and tools download link：https://developer.nvidia.com/embedded/jetson-linux-r3541

- ***NVIDIA Jetpack for L4T***

  Jetpack is a software package released by NVIDIA that contains all of the software tools needed for Orin NX/Orin Nano development using the A608, including host and target tools, including OS image files, middleware, sample applications, documentation, and more. The newly released JetPack runs on Ubuntu 20.04 Linux 64-bit hosts.

  It can be downloaded from the link below：https://developer.nvidia.com/embedded/jetpack

- ***Default configuration system***

  Leetop_A608 uses Ubuntu 20.04 system, default username: nvidia password: nvidia

- ***Development materials and forum***

  L4T development data：https://developer.nvidia.com/embedded/linux-tegra

  Developer Forum: https://forums.developer.nvidia.com/

View System Version

View the installed system package version

```
cat /etc/nv_tegra_release
```

View information about the installed JetPack

```
sudo apt show nvidia-jetpack
```

Make a backup image

Making a backup image needs to be done in the environment of command line flashing, only the system.img file is backed up

1. Use a USB cable to connect the USB Type-A of the PC computer of the Ubuntu18.04 system to the Type C of the Leetop_A608;
2. Power on the Leetop_A608 and enter Recovery mode;
3. Enter the Linux_for_tegra directory, and refer to README_backup_restore.txt in backup_restore for backup.

   Instructions for backing up the Jetson Orin Nano/Orin NX system:

   ```
   cd Linux_for_Tegra
   systemctl stop udisks2.service #Automount backup restore for new external storage devices must be temporarily disabled.
   sudo tools/l4t_flash_prerequisites.sh #For Debian-based Linux
   sudo service nfs-kernel-server start
   sudo ./tools/backup_restore/l4t_backup_restore.sh -e nvme0n1  -b jetson-orin-nano-devkit #Backup image, after the backup is successful, an image file will be generated under Linux_for_Tegra/tools/backup_restore.
   sudo ./tools/backup_restore/l4t_backup_restore.sh -r jetson-orin-nano-devkit #Backup image restoration.
   ```

4. Use the backup image to flash:

   ```
   sudo ./tools/backup_restore/l4t_backup_restore.sh -r jetson-orin-nano-devkit
   #Backup image restoration
   ```

   If it can be flashed normally, it means that the created backup image is available.

Installation of Jtop tools

Jtop is a system monitoring utility for Jetson that can be run on a terminal to view and control the status of NVIDIA Jetson in real time.

Installation steps:

1. Install pip3-tools

```
sudo apt-get install python3-pip
```

2. Install the jtop package with pip3

```
sudo -H pip3 install -U jetson-stats
```

3. Can run after reboot

```
jtop
```

After running, as shown in the figure below:

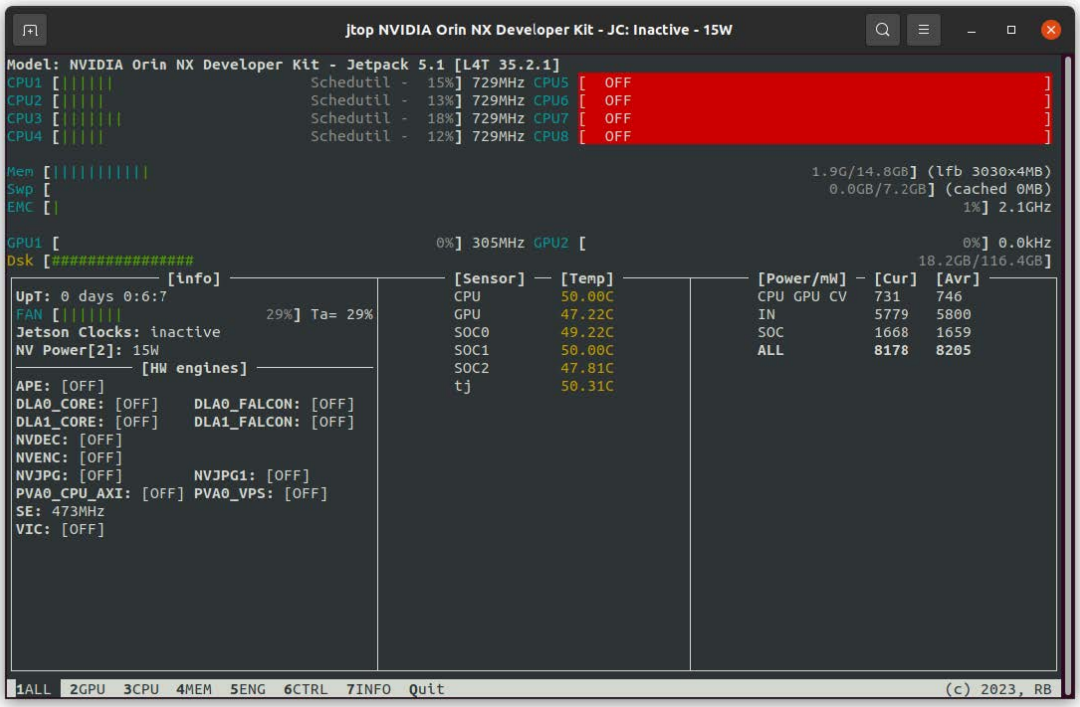

Access to Solid State Drives

Leetop_ A608 carrier board has a standard M.2 KEY M interface, which can connect to standard M.2 KEY M devices such as 2280 size solid-state drives with PCIE interfaces. After connecting a solid-state drive, there are two ways to mount the drive to the system: one is to use tools such as Fdisk, and the other is to use command line mode.

The operation steps of command line mounting are as follows:

1. Use the command lspci to check whether the recognition is successful
2. Create partition

```
sudo su
fdisk /dev/nvme0n1
```

3. Create an ext4 file system

```
mkfs.ext4  /dev/internal
#Mkfs is the file system type
```

4. Mounting hard disk

```
mount -t ext4 /dev/internal  nvme/
```

5. Set automatic mounting

```
echo /dev/internal /mnt ext4 defaults 0 0 >> /etc/fstab
```

Developer Tools

JetPack

NVIDIA JetPack SDK is the most comprehensive solution for building AI applications. It bundles Jetson platform software including TensorRT, cuDNN, CUDA Toolkit, VisionWorks, GStreamer, and OpenCV, all built on top of L4T with LTS Linux kernel.

JetPack includes NVIDIA container runtime, enabling cloud-native technologies and workflows at the edge.

JetPack SDK Cloud-Native on Jetson

L4T

NVIDIA L4T provides the Linux kernel, bootloader, NVIDIA drivers, flashing utilities, sample filesystem, and more for the Jetson platform.

You can customize L4T software to fit the needs of your project. By following the platform adaptation and bring-up guide, you can optimize your use of the complete Jetson product feature set. Follow the links below for details about the latest software libraries, frameworks, and source packages.

DeepStream SDK on Jetson

NVIDIA's DeepStream SDK delivers a complete streaming analytics toolkit for AI-based multi-sensor processing, video and image understanding. DeepStream is an integral part of NVIDIA Metropolis, the platform for building end-to-end services and solutions that transform pixel and sensor data to actionable insights. Learn about the latest 5.1..2 developer preview features in our developer news article.

Isaac SDK

The NVIDIA Isaac SDK makes it easy for developers to create and deploy AI-powered robotics. The SDK includes the Isaac Engine (application framework), Isaac GEMs (packages with high-performance robotics algorithms), Isaac Apps (reference applications) and Isaac Sim for Navigation (a powerful simulation platform). These tools and APIs accelerate robot development by making it easier to add artificial intelligence (AI) for perception and navigation into robots.

Key features of Jetpack

OS	NVIDIA Jetson Linux 35.4.1 provides the Linux Kernel 5.10, UEFI based bootloader, Ubuntu 20.04 based root file system, NVIDIA drivers, necessary firmwares, toolchain and more.**JetPack 5.1.2 includes Jetson Linux 35.4.1 which adds following highlights: (Please refer to release notes for additional details)** Adds support for Jetson AGX Orin Industrial module; Bootloader: Support for Grub as OS Loader in UEFI; Support for PXE boot; Camera: Enhanced error resiliency for improved stability in Argus; Support for multiple camera synchronization (sample argus_syncstereo added) Deskew calibration support for high data rate sensors (> 1.5 Gbps) Support for alternating exposures in Argus (sample argus_userAlternatingAutoexposure added) Multimedia: Deprecated Nvbuf_utils is removed. Refer to migration guide to migrate from Nvbuf_utils to NvUtils. Security: Support for up to 3 signing keys to sign bootloader in secure boot and ability to revoke the keys Ability to add and revoke UEFI signing keys Enhanced secure boot for encrypting kernel, kernel-dtb and initrd Support for delegated authentication with ability to sign UEFI with platform vendor owned keys Support in disk encryption for encrypting only User Data Partition (UDA) and runtime enabling encryption of UDA partitions Over The Air Updates: Support for Jetson Orin NX and Jetson Orin Nano in Image based OTA tools
TensorRT	TensorRT is a high performance deep learning inference runtime for image classification, segmentation, and object detection neural networks. TensorRT is built on CUDA, NVIDIA's parallel programming model, and enables you to optimize inference for all deep learning frameworks. It includes a deep learning inference optimizer and runtime that delivers low latency and high-throughput for deep learning inference applications. **JetPack 5.1.2 includes TensorRT 8.5.2**
DLA	NVIDIA DLA hardware is a fixed-function accelerator engine targeted for deep learning operations. It's designed to do full hardware acceleration of convolutional neural networks, supporting various layers such as convolution, deconvolution, fully connected, activation, pooling, batch normalization, and others DLA software consists of the DLA compiler and the DLA runtime stack. The offline compiler translates the neural network graph into a DLA loadable binary and can be invoked using NVIDIA TensorRT™. The runtime stack consists of the DLA firmware, kernel mode driver, and user mode driver. **JetPack 5.1.2 includes DLA 3.12.1**
cuDNN	CUDA Deep Neural Network library provides high-performance primitives for deep learning frameworks. It provides highly tuned implementations for standard routines such as forward and backward convolution, pooling, normalization, and activation layers. **JetPack 5.1.2 includes cuDNN 8.6.0**

CUDA	CUDA Toolkit provides a comprehensive development environment for C and C++ developers building GPU-accelerated applications. The toolkit includes a compiler for NVIDIA GPUs, math libraries, and tools for debugging and optimizing the performance of your applications. **JetPack 5.1.2 includes CUDA 11.4.19** Starting with JetPack 5.0.2, upgrade to latest and greatest CUDA releases from CUDA 11.8 onwards without the need to update Jetson Linux other JetPack components. Refer to instructions in the CUDA documentation on how to get the latest CUDA on JetPack.
Multimedia API	The Jetson Multimedia API package provides low level APIs for flexible application development. Camera application API: libargus offers a low-level frame-synchronous API for camera applications, with per frame camera parameter control, multiple (including synchronized) camera support, and EGL stream outputs. RAW output CSI cameras needing ISP can be used with either libargus or GStreamer plugin. In either case, the V4L2 media-controller sensor driver API is used. Sensor driver API: V4L2 API enables video decode, encode, format conversion and scaling functionality. V4L2 for encode opens up many features like bit rate control, quality presets, low latency encode, temporal tradeoff, motion vector maps, and more. **JetPack 5.1.2 Camera highlights include:** Enhanced error resiliency for improved stability in Argus; Support for multiple camera synchronization (sample argus_syncstereo added). Deskew calibration support for high data rate sensors (> 1.5 Gbps) .Support for alternating exposures in Argus (sample argus_userAlternatingAutoexposure added)
Computer Vision	VPI (Vision Programing Interface) is a software library that provides Computer Vision / Image Processing algorithms implemented on multiple hardware accelerators found on Jetson such as PVA (Programmable Vision Accelerator), GPU, NVDEC(NVIDIA Decoder), NVENC (NVIDIA Encoder), VIC (Video Image Compositor) and so on. OpenCV is an open source library for computer vision, image processing and machine learning. **JetPack 5.1.2 includes VPI 2.3 with following highlights:** New Brute Force Matcher algorithm supported on CPU and GPU backends ; New Transform Estimator algorithm supported on CPU backend. JetPack 5.1.2 includes OpenCV 4.5.4

Graphics	JetPack 5.1.2 includes the following graphics libraries: Vulkan® 1.3 (including the Roadmap 2022 Profile). Vulkan 1.3 Announcement Vulkan® SC 1.0: Vulkan SC is a low-level, deterministic, robust API that is based on Vulkan 1.2. This API enables state-of-the-art GPU-accelerated graphics and computation that can be deployed in safety-critical systems and that are certified to meet industry functional safety standards. Refer to https://www.khronos.org/vulkansc/ for more information;Vulkan SC can also be invaluable for real-time non safety critical embedded applications. Vulkan SC increases determinism and reduces application size by shifting preparation of the run-time application environment either offline, or into application setup, as much as possible. This includes offline compilation of graphics pipelines that define how the GPU processes data, together with static memory allocation, that together enable detailed GPU control that can be rigorously specified and tested.Vulkan SC 1.0 is evolved from Vulkan 1.2 and includes: the removal of runtime functionality that is not needed in safety-critical markets, an updated design to provide predictable execution times and results, and clarifications to remove potential ambiguity in its operation. For more details see https://www.khronos.org/blog/vulkan-sc-overview **Note**: Jetson support for Vulkan SC is **not** safety certified. OpenWF™ Display 1.0: OpenWF Display is a Khronos API for low overhead interaction with the native display driver on Jetson and allows interaction with Vulkan SC to display images. **Note**: Jetson support for OpenWF Display is **not** safety certified.
Developer Tools	CUDA Toolkit provides a comprehensive development environment for C and C++ developers building high-performance GPU-accelerated applications with CUDA libraries. The toolkit includes Nsight Visual Studio Code Edition, Nsight Eclipse Plugins, debugging and profiling tools including Nsight Compute, and a toolchain for cross-compiling applications NVIDIA Nsight Systems is a low overhead system-wide profiling tool, providing the insights developers need to analyze and optimize software performance. NVIDIA Nsight Graphics is a standalone application for debugging and profiling graphics applications. NVIDIA Nsight Deep Learning Designer is an integrated development environment that helps developers efficiently design and develop deep neural networks for in-app inference. Nsight System, Nsight Graphics, and Nsight Compute are all supported on Jetson Orin modules to assist development for autonomous machines. **JetPack 5.1.2 includes NVIDIA Nsight Systems v2022.5** ;**JetPack 5.1.2 includes NVIDIA Nsight Graphics 2022.6** ;**JetPack 5.1.2 includes NVIDIA Nsight Deep Learning Designer 2022.2**

Supported SDKs and Tools	NVIDIA DeepStream SDK is a complete analytics toolkit for AI-based multi-sensor processing and video and audio understanding. **DeepStream 6.2 release supports JetPack 5.1.2** NVIDIA Triton™ Inference Server simplifies deployment of AI models at scale. Triton Inference Server is open source and supports deployment of trained AI models from NVIDIA TensorRT, TensorFlow and ONNX Runtime on Jetson. On Jetson, Triton Inference Server is provided as a shared library for direct integration with C API. PowerEstimator is a webapp that simplifies creation of custom power mode profiles and estimates Jetson module power consumption. **JetPack 5.1.2 adds supports for Jetson Orin NX and Jetson Orin Nano in PowerEstimator.** NVIDIA Isaac™ ROS is a collection of hardware-accelerated packages that make it easier for ROS developers to build high-performance solutions on NVIDIA hardware including NVIDIA Jetson. **Isaac ROS DP 3.1 supports JetPack 5.1.2**
Cloud Native	Jetson brings Cloud-Native to the edge and enables technologies like containers and container orchestration. NVIDIA JetPack includes NVIDIA Container Runtime with Docker integration, enabling GPU accelerated containerized applications on Jetson platform. NVIDIA hosts several container images for Jetson on NVIDIA NGC. Some are suitable for software development with samples and documentation and others are suitable for production software deployment, containing only runtime components. Find more information and a list of all container images at the Cloud-Native on Jetson page.
Security	NVIDIA Jetson modules include various security features including Hardware Root of Trust, Secure Boot, Hardware Cryptographic Acceleration, Trusted Execution Environment, Disk and Memory Encryption, Physical Attack Protection and more. Learn about the security features by jumping to the security section of the Jetson Linux Developer guide. **JetPack 5.1.2 Security highlights include:** Support for up to 3 signing keys to sign bootloader in secure boot and ability to revoke the keys;Ability to add and revoke UEFI signing keys;Enhanced secure boot for encrypting kernel, kernel-dtb and initrd;Support for signing kernel modules ;Support for delegated authentication with ability to sign UEFI with platform vendor owned keys ;Support in disk encryption for encrypting only User Data Partition (UDA) and runtime enabling encryption of UDA partitions

Sample Applications

JetPack includes several samples which demonstrate the use of JetPack components. These are stored in the reference filesystem and can be compiled on the developer kit.

JetPack component	Sample locations on reference filesystem
TensorRT	/usr/src/tensorrt/samples/
cuDNN	/usr/src/cudnn_samples_/
CUDA	/usr/local/cuda-/samples/
Multimedia API	/usr/src/tegra_multimedia_api/
VisionWorks	/usr/share/visionworks/sources/samples/ /usr/share/visionworks-tracking/sources/samples/ /usr/share/visionworks-sfm/sources/samples/
OpenCV	/usr/share/OpenCV/samples/
VPI	/opt/nvidia/vpi/vpi-/samples

Developer Tools

JetPack includes the following developer tools. Some are used directly on a Jetson system, and others run on a Linux host computer connected to a Jetson system.

- Tools for application development and debugging:
  - NSight Eclipse Edition for development of GPU accelerated applications: Runs on Linux host computer. Supports all Jetson products.
  - CUDA-GDB for application debugging: Runs on the Jetson system or the Linux host computer. Supports all Jetson products.
  - CUDA-MEMCHECK for debugging application memory errors: Runs on the Jetson system. Supports all Jetson products.
- Tools for application profiling and optimization:
  - NSight Systems for application multi-core CPU profiling: Runs on the Linux host computer. Helps you improve application performance by identifying slow parts of code. Supports all Jetson products.
  - NVIDIA® Nsight™ Compute kernel profiler: An interactive profiling tool for CUDA applications. It provides detailed performance metrics and API debugging via a user interface and command line tool.
  - NSight Graphics for graphics application debugging and profiling: A console-grade tool for debugging and optimizing OpenGL and OpenGL ES programs. Runs on the Linux host computer. Supports all Jetson products.

Abbreviations and Definitions

Abbreviation	Definition
CEC	Consumer Electronic Control
CAN	Controller Area Network
DP	VESA® DisplayPort® (output)
eDP	Embedded DisplayPort
eMMC	Embedded MMC
HDMI	High Definition Multimedia Interface
I2C	Inter IC
I2S	Inter IC Sound Interface
LDO	Low Dropout (voltage regulator)
LPDDR4x	Low Power Double Data Rate DRAM, Fourth-generation
PCIe (PEX)	Peripheral Component Interconnect Express interface
PCM	Pulse Code Modulation
PHY	Physical Layer
PMIC	Power Management IC
RTC	Real Time Clock
SDIO	Secure Digital I/O Interface
SLVS	Scalable Low Voltage Signaling
SPI	Serial Peripheral Interface
UART	Universal Asynchronous Receiver-Transmitter
UFS	Universal Flash Storage
USB	Universal Serial Bus

FCC Warnning:

This equipment has been tested and found to comply with the limits for a Class B digital device, pursuant to part 15 of the FCC Rules. These limits are designed to provide reasonable protection againstharmful interference in a residential installation. This equipment generates, uses and can radiateradio frequency energy and, if not installed and used in accordance with the instructions, maycause harmful interference to radio communications. However, there is no guarantee thatinterference will not occur in a particular installation. If this equipment does cause harmfulinterference to radio or television reception, which can be determined by turning the equipmentoff and on, the user is encouraged to try to correct the interference by one or more of thefollowing measures:

- Reorient or relocate the receiving antenna.
- Increase the separation between the equipment and receiver.
- Connect the equipment into an outlet on a circuit different from that to which the receiver is connected.
- Consult the dealer or an experienced radio/TV technician for help.

Caution: Any changes or modifications to this device not explicitly approved by manufacturer could void your authority to operate this equipment.

This device complies with part 15 of the FCC Rules. Operation is subject to the following two conditions:

(1)This device may not cause harmful interference, and (2) this device must accept any interference received, including interference that may cause undesired operation.

This equipment complies with FCC radiation exposure limits set forth for an uncontrolled environment. This equipment should be installed and operated with minimum distance 20cm between the radiator and your body.