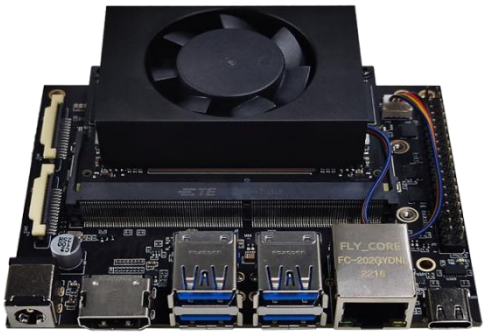

Leetop-SUBKIT-Orin NX(16G) is an embedded artificial intelligence computer capable of giving computing power up to 70/100TOPS to a wide range of terminal devices. Leetop-SUBKIT-Orin NX(16G)provides fast active cooling design to meet industry standards such as earthquake resistance and anti-static. At the same time, Leetop-SUBKIT-Orin NX(16G)is rich in interfaces and cost-effective.

Specification:

	Jetson Orin NX 8GB	Jetson Orin NX 16GB
AI Performance	70 TOPS	100 TOPS
GPU	1024-core NVIDIA Ampere GPU with 32 Tensor Cores	
CPU	6-core NVIDIA Arm® Cortex A78AE v8.2 64-bit CPU 1.5MB L2 + 4MB L3	8-core NVIDIA Arm® Cortex A78AE v8.2 64-bit CPU 2MB L2 + 4MB L3
Video Encode	1x 4K60 | 3x 4K30 | 6x 1080p60 | 12x 1080p30 (H.265) 1x 4K60 | 2x 4K30 | 5x 1080p60 | 11x 1080p30 (H.264)	
Video Decode	1x 8K30 | 2x 4K60 | 4x 4K30 | 9x 1080p60| 18x 1080p30 (H.265) 1x 4K60 | 2x 4K30 | 5x 1080p60 | 11x 1080p30 (H.264)	
Memory	8 GB 128-bit LPDDR5 102.4 GB/s	16 GB 128-bit LPDDR5 102.4 GB/s
Storage	— (Supports external NVMe)	

I/O：

Interface	Specification
Network	1 × Gigabit Ethernet Connector (10/100/1000)
USB	3x USB 3.0 Type A (Integrated USB 2.0) 1x USB 3.2 Type A 1x USB 2.0 +3.2Type C
Video output	1 × HDMI 2.0 (TYPE A)
CAN	1 × CAN
SPI Bus	1 × SPI Bus(+3.3V Level)
M.2 KEY M	1 × M.2 KEY M Interface(Type 2280)
M.2 KEY E	1 × M.2 KEY E Interface
Camera	CSI 2 line

Power Supply:

Power Supply	Spec
Input Voltage	+9--+20V DC Input @7A
Typical consumption	60W

Mechanical

Mechanical	Spec
Dimensions (W×D ×H)	100×80.6×33.4 (mm)
Weight	0.179KG

Environmental

Environmental	Spec
Operating Temperature	-20℃-75℃ 0.2~0.3m/s
Storage Humidity	10%-90% non-condensing

Schematic diagram of dimensions:

Front view	Left view
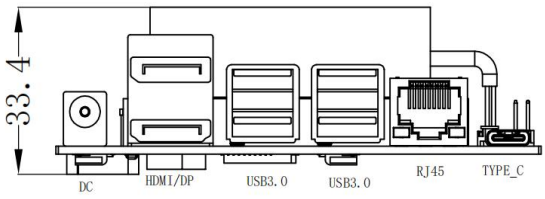	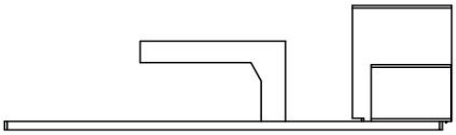
Up view	**Rear view**
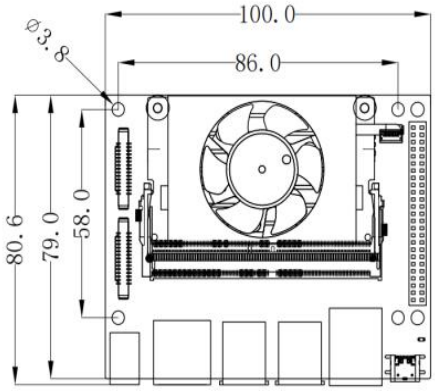	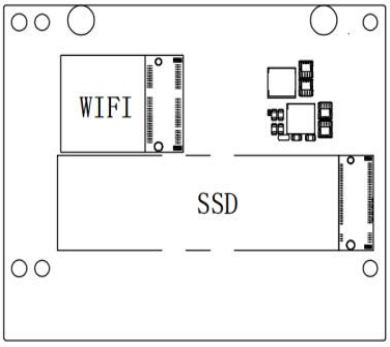

FCC Warnning:

This equipment has been tested and found to comply with the limits for a Class B digital device, pursuant to part 15 of the FCC Rules. These limits are designed to provide reasonable protection againstharmful interference in a residential installation. This equipment generates, uses and can radiateradio frequency energy and, if not installed and used in accordance with the instructions, maycause harmful interference to radio communications. However, there is no guarantee thatinterference will not occur in a particular installation. If this equipment does cause harmfulinterference to radio or television reception, which can be determined by turning the equipmentoff and on, the user is encouraged to try to correct the interference by one or more of thefollowing measures:

- Reorient or relocate the receiving antenna.
- Increase the separation between the equipment and receiver.
- Connect the equipment into an outlet on a circuit different from that to which the receiver is connected.
- Consult the dealer or an experienced radio/TV technician for help.

Caution: Any changes or modifications to this device not explicitly approved by manufacturer could void your authority to operate this equipment.

This device complies with part 15 of the FCC Rules. Operation is subject to the following two conditions:

(1)This device may not cause harmful interference, and (2) this device must accept any interference received, including interference that may cause undesired operation.

This equipment complies with FCC radiation exposure limits set forth for an uncontrolled environment. This equipment should be installed and operated with minimum distance 20cm between the radiator and your body.