MOUNTING WITH FASTENERS

RECOMMENDED FASTENERS

⚠ **CAUTION:** Do not use self-drilling or self-tapping screws to mount the Main Unit. These can become loose and may result in the Main Unit coming off during travel. Only use the recommended fasteners or equivalent.

Fasteners × 4: M4 (3/16" UNC)
Length is determined by the mounting surface thickness.

Nyloc Nut × 4: M4 (3/16" UNC)

Flat Washers × 4: M4 × 9 mm (3/16" UNC)

MOUNTING STEPS

The steps below explain how to mount the Main Unit using the recommended fasteners.

Optionally, you can use the supplied Foam Adhesive Tape to position the Main Unit in place to make mounting easier. If using, apply the tape after step 3.

1. Confirm that your chosen mounting location meets all criteria listed in 'Mounting Checklist — Before You Begin' (page 5).
2. Mark the centres of the mounting holes; you can use the mounting template on page 13.
3. Drill clearance/pilot holes. De-burr the holes and touch up any exposed bare metal surfaces with a rust-inhibitor.

   ⚠ **WARNING:** Use suitable Personal Protective Equipment (PPE) when operating power tools.

4. Fasten the Main Unit firmly in place so that it can not move. Movement of the Main Unit will affect system calibration.

1

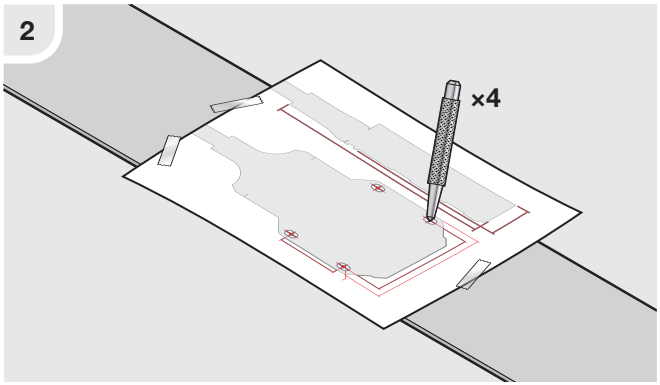
2
×4

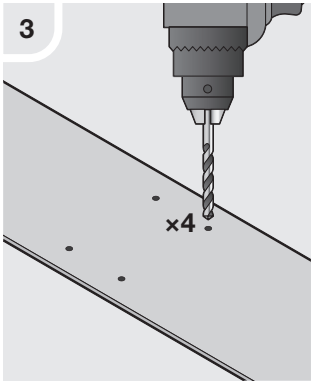
3
×4

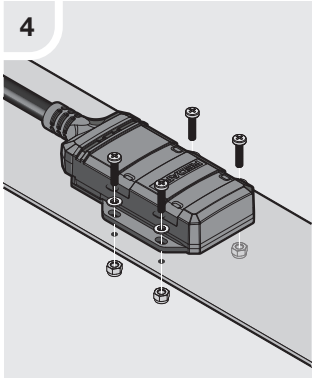
4

INSTALLATION — WIRING

WIRING STEPS

⚠ CAUTION: Do not route cables over hot surfaces or sharp objects, near the fuel system or brake lines, or over/through parts of the vehicle that move during operation or maintenance.

⚠ WARNING: Make sure all connectors are properly coupled and cannot come apart during operation, as this could cause a loss of braking.

1. Unplug the USCAR factory harness from the rear of the Trailer Connector.
2. Firmly connect the USCAR 7-way Socket of the Wiring Loom to the Trailer Connector.
3. Firmly connect the USCAR 7-way Plug of the Wiring Loom to the USCAR 7-way Socket of the USCAR factory harness.
4. Tidy up cables as needed — see 'Strain-Relief and Cable Management' (page 11) for more information.

WIRING DIAGRAM

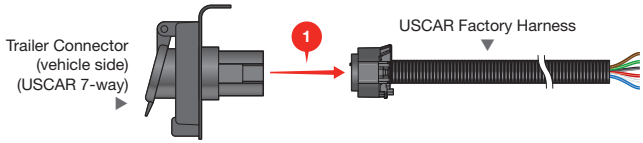

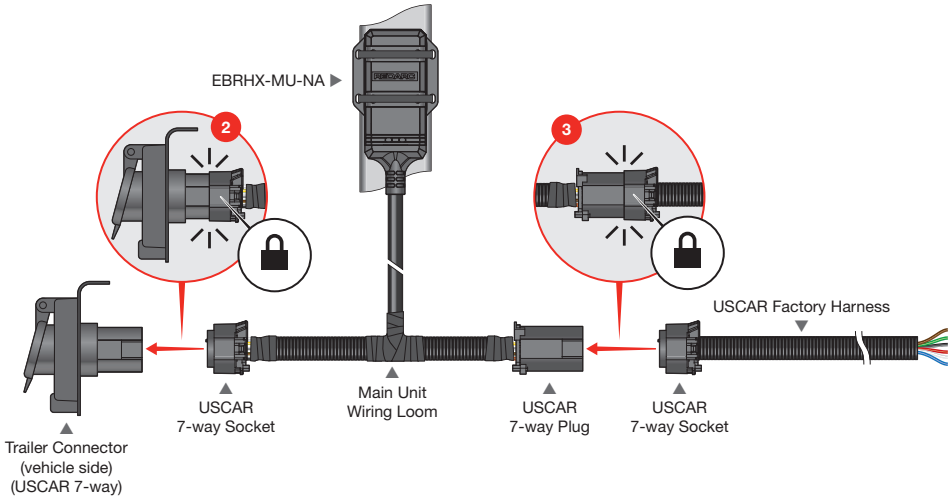

STRAIN-RELIEF AND CABLE MANAGEMENT

Once all wiring is completed, do the following where applicable to protect and secure the cables:

- The main cable is rigid and difficult to bend. A tighter bend radius can be achieved, however a cable section must be bent tightly **only once.** Repeated bending of a section cable may cause internal wiring to fatigue and break.
- Ensure that cables and connectors are not subject to strain/tension during use. Excess cable should be neatly bundled by turning it back on itself in a convenient straight section — avoid multiple tight loops.
- Use the supplied cable ties to secure cables to fixed parts of the vehicle every 30 cm / 1' or less, or as specified by local vehicle wiring standards.

SYSTEM TESTING

It is important to check the system is functioning correctly before it is used on the road.

⚠ WARNING

Ensure that your trailer brakes are installed and are operating correctly:

- **Improperly installed and/or faulty trailer brakes can cause erratic vehicle or trailer behaviour with the potential to cause a road accident.** For this reason, it is of utmost importance that your trailer braking system be installed/maintained by a qualified installer.
- **Always check brakes at low speed each time a trailer is attached to your vehicle.**
- **Immediately after installation (to be done by a qualified installer),** test the installation/vehicle wiring. Testing your vehicle wiring is best done by connecting a test light (max. 21 W filament globe) to the brake output, pushing the manual override and having someone check that the test lamp illuminates.

OPERATION

For operation instructions, refer to the supplied User Manual.

The User Manual can be downloaded at: **www.redarcelectronics.com/downloads**

TROUBLESHOOTING

For troubleshooting information, refer to the supplied User Manual.

SPECIFICATIONS

GENERAL SPECIFICATIONS

Specifications shown are for the EBRHX-MU-NA Tow-Pro Main Unit only. For specifications for your Remote, refer to the Install Guide supplied with the Remote.

	EBRHX-MU-NA
Operating voltage range*	9 to 16 V ⎓
Nominal input system voltage*	12 V ⎓
Brake input signal voltage*	OFF: 0 V | ON: +12 V nominal
Trailer connection type	USCAR 7-way plug-and-play
Brake coil voltage*	12 V
Maximum trailer axles	4 axles
Nominal current draw	18 A
Maximum rated current	25 A
Standby current	< 5 mA
Operating temp	–40°C to +85°C (–40°F to 185°F)
Weight	417.5 g (14.7 oz)
Remote Compatibility	Adhesive Mounted USB Remote (EBRHX-ADH-RH) Dash Mounted Remote (EBRHX-DMT-RH)
Waterproof Main Unit	Yes, IP57

* Voltages specified are ± 100 mV.

DIMENSIONS / MOUNTING TEMPLATE

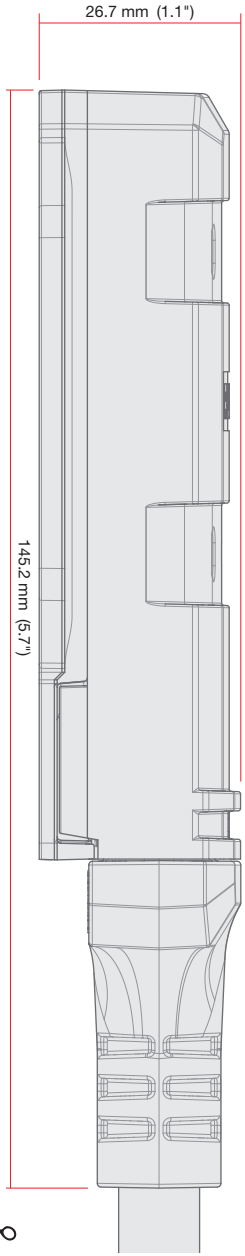

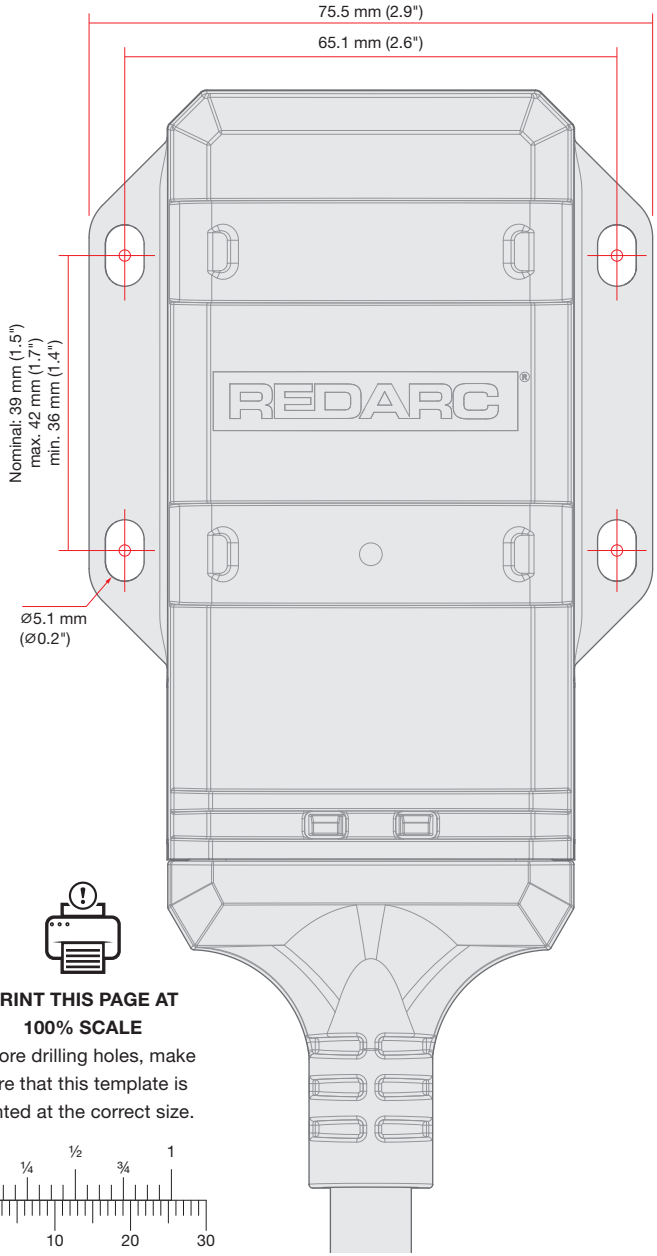

PRINT THIS PAGE AT 100% SCALE

Before drilling holes, make sure that this template is printed at the correct size.

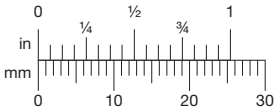

Cut out page to use as mounting template

REAR OF MOUNTING TEMPLATE

Cut out page to use as mounting template

COMPLIANCE AND STANDARDS

Standards	
ICES	CAN ICES-003 (B)/ NMB-003(B)

FEDERAL COMMUNICATIONS COMMISSION (FCC) STATEMENT

FCC Statement — Class B

Note: This equipment has been tested and found to comply with the limits for a Class B digital device, pursuant to part 15 of the FCC Rules. These limits are designed to provide reasonable protection against harmful interference in a residential installation. This equipment generates, uses and can radiate radio frequency energy and, if not installed and used in accordance with the instructions, may cause harmful interference to radio communications. However, there is no guarantee that interference will not occur in a particular installation. If this equipment does cause harmful interference to radio or television reception, which can be determined by turning the equipment off and on, the user is encouraged to try to correct the interference by one or more of the following measures:

- Reorient or relocate the receiving antenna.
- Increase the separation between the equipment and receiver.
- Connect the equipment into an outlet on a circuit different from that to which the receiver is connected.
- Consult the dealer or an experienced radio/TV technician for help.

This equipment complies with the FCC and ISED Canada radiation exposure limits set forth for an uncontrolled environment. This equipment should be installed and operated with a minimum distance of 20 cm between the radiator and all persons during normal operation.

WARNING: Any changes or modifications not expressively approved by the grantee could void the user's authority to operate this equipment

FCC ID: 2BAH6-EBRHXMUNA

Details of the Responsible party:

REDARC Corporation, 1701 Northwest Highway, Suite 100, Grapevine TX, 76051, USA

Phone: +1 (704) 247 5150

INDUSTRY CANADA (IC) COMPLIANCE NOTICE

This equipment complies with the FCC and ISED Canada radiation exposure limits set forth for an uncontrolled environment. This equipment should be installed and operated with a minimum distance of 20 cm between the radiator and all persons during normal operation.

ICES Statement — Intentional Transmitter

This device complies with Part 15 of the FCC Rules and with Innovation, Science and Economic Development Canada's licence-exempt RSS(s). Operation is subject to the following two conditions:

1. This device may not cause interference.
2. This device must accept any interference, including interference that may cause undesired operation of the device.

IC: 30290-EBRHXMUNA

AVIS DE CONFORMITÉ D'INDUSTRIE CANADA (IC)

Cet équipement est conforme aux limites d'exposition aux rayonnements de la FCC et ISED Canada établies pour un environnement non contrôlé. Cet équipement doit être installé et utilisé avec une distance minimale de 20 cm entre le radiateur et toutes les personnes pendant le fonctionnement normal.

Déclaration du CIEM — Émetteur intentionnel

L'émetteur/récepteur exempt de licence contenu dans le présent appareil est conforme aux CNR d'Innovation, Sciences et Développement économique Canada applicables aux appareils radio exempts de licence. L'exploitation est autorisée aux deux conditions suivantes:

1. L'appareil ne doit pas produire de brouillage.
2. L'appareil doit accepter tout brouillage radioélectrique subi, même si le brouillardest susceptible d'en compromettre le fonctionnement

IC: 30290-EBRHXMUNA

WARRANTY

For full warranty terms and conditions, visit the Warranty page of the REDARC website at **www.redarcelectronics.com/warranty**.

Australia, New Zealand & Europe

REDARC Electronics Pty Ltd, 23 Brodie Road (North), Lonsdale SA 5160, Australia

Australia ..... +61 8 8322 4848
New Zealand ..... +64 9 222 1024
UK & Europe ..... +44 (0)20 3930 8109

North America

REDARC Corporation, c/o Shallco, Inc., 308 Component Dr., Smithfield, NC 27577, USA

USA ..... +1 (704) 247 5150
Canada ..... +1 (604) 260 5512
Mexico ..... +52 (558) 526 2898

CHECKING THE PRODUCT SERIAL NUMBER

The Product Serial Number is located on the back of the Main Unit and on the product packaging.

NOTES

PATENTS: This product may have patent(s) granted and/or pending, design and eligible layout rights may also subsist.
Visit www.redarcelectronics.com/patent.

Design, product configuration and technical specifications are subject to change without notice. | Copyright © 2024 REDARC Electronics Pty Ltd. All rights reserved. | REDARC®, THE POWER OF REDARC®, Tow-Pro® and Tow-Pro Link™ are trademarks of REDARC Electronics Pty Ltd.

REDARC Electronics Pty Ltd | ABN 77 136 785 092
REDARC Electronics Pty Ltd, 23 Brodie Road (North), Lonsdale SA 5160, Australia

Tech Support
1300 REDARC (1300-733-272)

Australia
+61 8 8322 4848

New Zealand
+64 9 222 1024

UK & Europe
+44 (0)20 3930 8109

USA
+1 (704) 247-5150

Canada
+1 (604) 260-5512

Mexico
+52 (558) 526-2898

redarcelectronics.com

THE POWER OF REDARC®

INST202-1