Manual

How to run the sensor in normal operation

09 Feb 2023

SMART TECHNOLOGY FOR SMARTER MOBILITY

Introduction

This device contains licence-exempt transmitter(s)/receiver(s) that comply with Innovation, Science and Economic Development Canada's licence-exempt RSS(s) and complies with part 15 of the FCC Rules. Operation is subject to the following two conditions:

1. This device may not cause harmful interference.
2. This device must accept any interference received, including interference that may cause undesired operation of the device

Changes or modifications made to this equipment not expressly approved by Valeo North America Inc. may void the FCC authorization to operate this equipment

This equipment complies with FCC and ISED radiation exposure limits set forth for an uncontrolled environment.

This transmitter must not be co-located or operating in conjunction with any other antenna or transmitter.

Setup

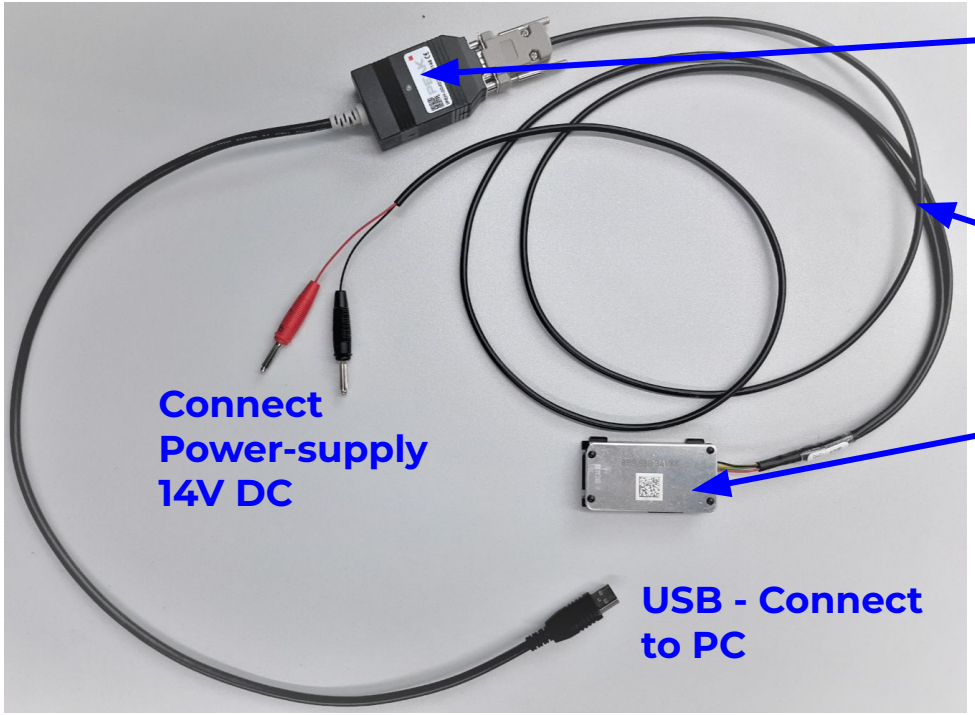

PCAN Can interface between CPD001 and computer

Wire harness CAN + Vbat

DUT CPD001

Get PCAN running

Install PCAN driver

- Download and install the latest version of the PCAN driver from Peak website:
  https://www.peak-system.com/quick/DrvSetup

Start LPD_Testing_Tool

Open LPD_Testing_Tool_V06.00_x64.exe

- Unzip “LPD_Testing_Tool_V06.00_Audi.zip”
- Connect the DUT via Peak-CAN-interface with the computer
- Open exe

Name	Änderungsdatum	Typ	Größe
Recordings	06.02.2023 10:39	Dateiordner	
Audi_LPD_Tool_Profile.pfl	31.01.2023 16:22	PFL-Datei	2 KB
LiveCharts.dll	20.06.2017 02:26	Anwendungserwei...	149 KB
LiveCharts.Wpf.dll	20.06.2017 02:26	Anwendungserwei...	213 KB
log.txt	21.03.2023 09:13	Textdokument	2 KB
LPD_Sec_Sign.exe	15.01.2023 15:50	Anwendung	28 KB
LPD_Testing_Tool_V06.00_x64.exe	23.01.2023 15:34	Anwendung	598 KB
Newtonsoft.Json.dll	17.03.2021 19:03	Anwendungserwei...	686 KB
PCANBasic.dll	09.02.2021 10:59	Anwendungserwei...	413 KB
PCAN-ISO-TP.dll	20.01.2021 13:16	Anwendungserwei...	444 KB
PCAN-UDS.dll	24.01.2021 14:45	Anwendungserwei...	499 KB
vcfg.template	11.01.2023 16:03	TEMPLATE-Datei	3 KB

Sensing activation

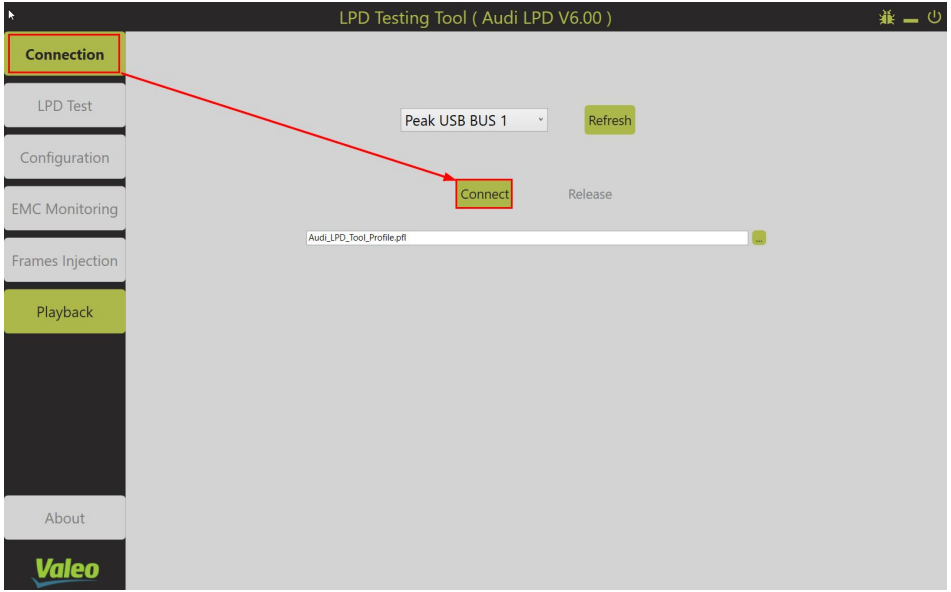

Description

Open the connection tab on the left and press “Connect”

Sensing activation

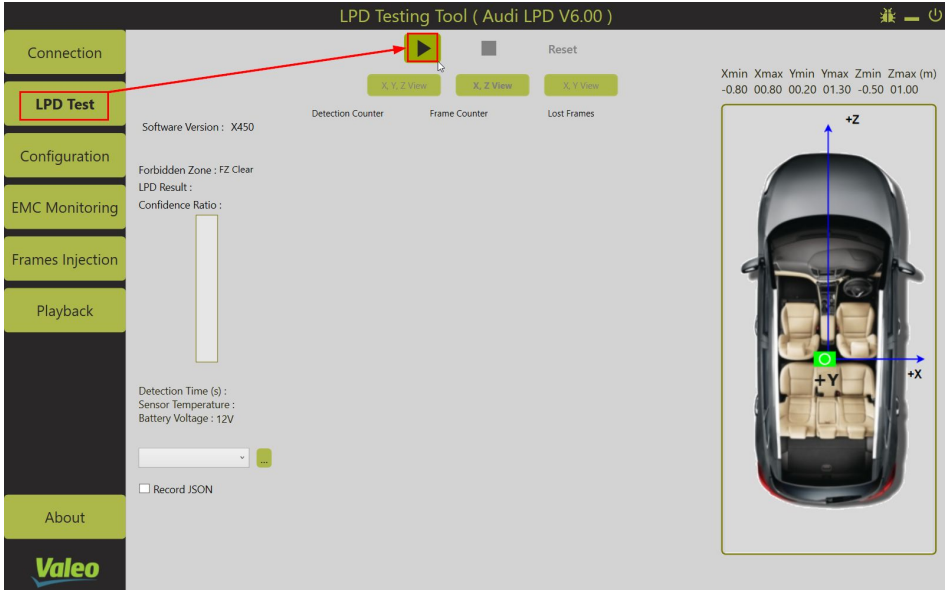

Description

Switch to the LPD Test tab on the left and press “play”

Sensing activation

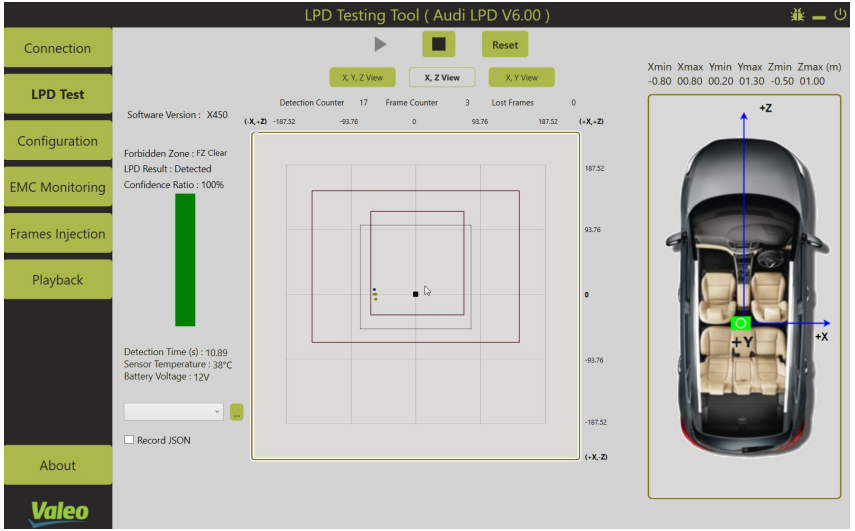

Example: Baby in the region of the left seat

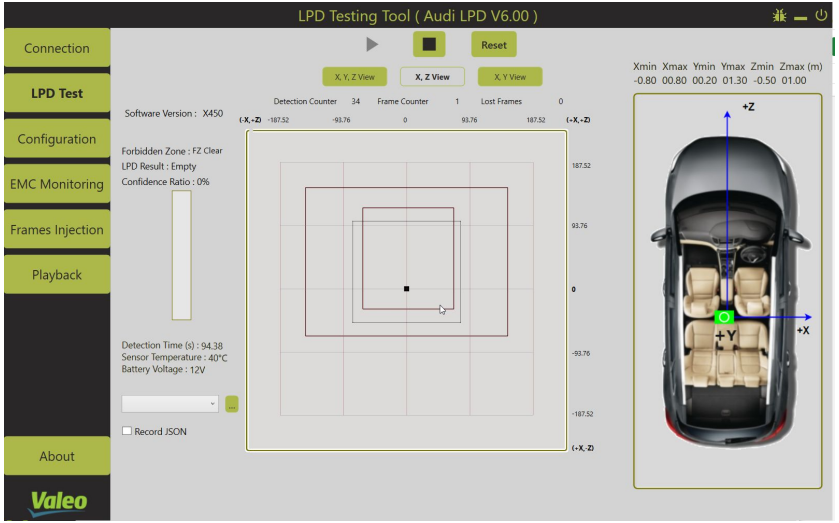

Example: An empty vehicle, showing no pointcloud

Description

A pointcloud will be displayed, showing the target position and the confidence ratio for life presence detection on the left

Valeo

SMART TECHNOLOGY
FOR SMARTER MOBILITY