TCT 通测检测
TESTING CENTRE TECHNOLOGY

TEST REPORT

FCC ID. ..... :	2BAHU2024001
Test Report No..... :	TCT240509E058
Date of issue..... :	Jun. 16, 2024
Testing laboratory ..... :	SHENZHEN TONGCE TESTING LAB
Testing location/ address:	2101 & 2201, Zhenchang Factory, Renshan Industrial Zone, Fuhai Subdistrict, Bao'an District, Shenzhen, Guangdong, 518103, People's Republic of China
Applicant's name..... :	DIALN PRODUCTS INC.
Address..... :	2000 Walton Road, Saint Louis, Missouri 63114, United States
Manufacturer's name ... :	DIALN PRODUCTS INC.
Address..... :	2000 Walton Road, Saint Louis, Missouri 63114, United States
Standard(s) ..... :	FCC CFR Title 47 Part 2 FCC CFR Title 47 Part22 FCC CFR Title 47 Part24 FCC CFR Title 47 Part27
Product Name..... :	Smart Phone
Trade Mark ..... :	DIALN
Model/Type reference..... :	X62S, X62, G62
Rating(s)..... :	Rechargeable Li-ion Battery DC 3.8V
Date of receipt of test item ..... :	May 09, 2024
Date (s) of performance of test..... :	May 09, 2024 ~ Jun. 16, 2024
Tested by (+signature) ... :	Rleo LIU
Check by (+signature).... :	Beryl ZHAO
Approved by (+signature):	Tomsin

General disclaimer:

This report shall not be reproduced except in full, without the written approval of SHENZHEN TONGCE TESTING LAB. This document may be altered or revised by SHENZHEN TONGCE TESTING LAB personnel only, and shall be noted in the revision section of the document. The test results in the report only apply to the tested sample.

TABLE OF CONTENTS

1. General Product Information 3
1.1. EUT description 3
1.2. Model(s) list 4
1.3. Emission Designator 4
1.4. Test Frequency 7
2. Test Result Summary 10
3. General Information 11
3.1. Test environment and mode 11
3.2. Description of Support Units 14
3.3. Configuration of Tested System 14
3.4. Measurement Results Explanation Example 14
4. Facilities and Accreditations 15
4.1. Facilities 15
4.2. Location 15
4.3. Measurement Uncertainty 15
5. Test Results and Measurement Data 16
5.1. Effective Radiated Power and Effective Isotropic Radiated Power Measurement 16
5.2. Peak to Average Ratio 18
5.3. 99% Occupied Bandwidth and 26dB Bandwidth Measurement 19
5.4. Band Edge and Conducted Spurious Emission Measurement 20
5.5. Field Strength of Spurious Radiation Measurement 22
5.6. Frequency Stability Measurement 40
Appendix B: Photographs of Test Setup
Appendix C: Photographs of EUT
Test Data: Refer to Appendix For LTE Band 2, Appendix For LTE Band 4, Appendix For LTE Band 5, Appendix For LTE Band 12, Appendix For LTE Band 41, Appendix For LTE Band 66 and Appendix For LTE Band 71

1. General Product Information

1.1. EUT description

Product Name.....:	Smart Phone
Model/Type reference.....:	X62S
Sample Number.....:	TCT240509E032-0101
Tx Frequency.....:	LTE Band 2: 1850 MHz ~ 1910 MHz LTE Band 4: 1710 MHz ~ 1755 MHz LTE Band 5: 824 MHz ~ 849 MHz LTE Band 12: 699 MHz ~ 716 MHz LTE Band 41: 2496 MHz ~ 2690 MHz LTE Band 66: 1710 MHz ~ 1780 MHz LTE Band 71: 663 MHz ~ 698 MHz
Rx Frequency .....:	LTE Band 2: 1930 MHz ~ 1990 MHz LTE Band 4: 2110 MHz ~ 2155 MHz LTE Band 5: 869 MHz ~ 894 MHz LTE Band 12: 729 MHz ~ 746 MHz LTE Band 41: 2496 MHz ~ 2690 MHz LTE Band 66: 2110 MHz ~ 2180 MHz LTE Band 71: 617 MHz ~ 652 MHz
Bandwidth.....:	LTE Band 2: 1.4MHz /3MHz /5MHz /10MHz /15MHz /20MHz LTE Band 4: 1.4MHz /3MHz /5MHz /10MHz /15MHz /20MHz LTE Band 5: 1.4MHz /3MHz /5MHz /10MHz LTE Band 12: 1.4MHz /3MHz /5MHz /10MHz LTE Band 41: 5MHz /10MHz /15MHz /20MHz LTE Band 66: 1.4MHz /3MHz /5MHz /10MHz /15MHz /20MHz LTE Band 71: 5MHz /10MHz /15MHz /20MHz
Maximum Output Power to Antenna.....:	LTE Band 2: 21.12dBm LTE Band 4: 20.76dBm LTE Band 5: 22.42dBm LTE Band 12: 22.98dBm LTE Band 41: 21.01dBm LTE Band 66: 19.08dBm LTE Band 71: 24.75dBm
99% Occupied Bandwidth.....:	LTE Band 2: 18M0G7D LTE Band 4: 18M0G7D LTE Band 5: 9M00G7D LTE Band 12: 9M00W7D LTE Band 41: 18M0G7D LTE Band 66: 18M0G7D LTE Band 71: 18M0G7D
Type of Modulation.....:	QPSK/16QAM
Antenna Type.....:	FPC Antenna

Antenna Gain.....:	0dBi
Rating(s).....:	Rechargeable Li-ion Battery DC 3.8V

Note: The antenna gain listed in this report is provided by applicant, and the test laboratory is not responsible for this parameter.

1.2. Model(s) list

No.	Model No.	Tested with
1	X62S	☒
Other models	X62, G62	☐

Note: X62S is tested model, other models are derivative models. The models are identical in circuit and PCB layout, only different on the model names. So the test data of X62S can represent the remaining models.

1.3. Emission Designator

LTE Band 2	QPSK		16QAM	
BW(MHz)	**Emission Designator (99%OBW)**	**Maximum EIRP(W)**	**Emission Designator (99%OBW)**	**Maximum EIRP(W)**
1.4	1M09G7D	0.132	1M09W7D	0.107
3	2M69G7D	0.121	2M69W7D	0.096
5	4M50G7D	0.126	4M51W7D	0.098
10	9M00G7D	0.125	8M99W7D	0.103
15	13M5G7D	0.124	13M5W7D	0.102
20	18M0G7D	0.129	18M0W7D	0.102

LTE Band 4	QPSK		16QAM	
BW(MHz)	**Emission Designator (99%OBW)**	**Maximum EIRP(W)**	**Emission Designator (99%OBW)**	**Maximum EIRP(W)**
1.4	1M09G7D	0.119	1M09W7D	0.096
3	2M70G7D	0.116	2M69W7D	0.098
5	4M50G7D	0.115	4M50W7D	0.093
10	9M00G7D	0.110	8M99W7D	0.087
15	13M5G7D	0.113	13M5W7D	0.093
20	18M0G7D	0.116	18M0W7D	0.093

LTE Band 5	QPSK		16QAM	
BW(MHz)	Emission Designator (99%OBW)	Maximum ERP(W)	Emission Designator (99%OBW)	Maximum ERP(W)
1.4	1M09G7D	0.175	1M09W7D	0.149
3	2M69G7D	0.158	2M69W7D	0.134
5	4M50G7D	0.157	4M50W7D	0.129
10	9M00G7D	0.158	8M98W7D	0.132

LTE Band 12	QPSK		16QAM	
BW(MHz)	Emission Designator (99%OBW)	Maximum ERP(W)	Emission Designator (99%OBW)	Maximum ERP(W)
1.4	1M09G7D	0.199	1M09W7D	0.158
3	2M69G7D	0.198	2M69W7D	0.161
5	4M51G7D	0.193	4M51W7D	0.153
10	9M00G7D	0.157	8M99W7D	0.197

LTE Band 41	QPSK		16QAM	
BW(MHz)	Emission Designator (99%OBW)	Maximum EIRP(W)	Emission Designator (99%OBW)	Maximum EIRP(W)
5	4M50G7D	0.121	4M50W7D	0.112
10	8M99G7D	0.117	8M98W7D	0.126
15	13M5G7D	0.110	13M5W7D	0.121
20	18M0G7D	0.113	18M0W7D	0.117

LTE Band 66	QPSK		16QAM	
BW(MHz)	Emission Designator (99%OBW)	Maximum EIRP(W)	Emission Designator (99%OBW)	Maximum EIRP(W)
1.4	1M09G7D	0.067	1M09W7D	0.081
3	2M70G7D	0.081	2M69W7D	0.067
5	4M50G7D	0.079	4M51W7D	0.062
10	9M00G7D	0.078	8M99W7D	0.064
15	13M5G7D	0.075	13M5W7D	0.062
20	18M0G7D	0.075	18M0W7D	0.059

LTE Band 71	QPSK		16QAM	
BW(MHz)	Emission Designator (99%OBW)	Maximum ERP(W)	Emission Designator (99%OBW)	Maximum ERP(W)
5	4M51G7D	0.299	4M52W7D	0.244
10	8M99W7D	0.298	8M99W7D	0.241
15	13M5G7D	0.290	13M5W7D	0.237
20	18M0G7D	0.285	18M0W7D	0.226

1.4. Test Frequency

LTE Band 2(1.4MHz)		LTE Band 2(3MHz)	
Channel	Frequency (MHz)	Channel	Frequency (MHz)
18607	1850.7	18615	1851.5
18900	1880	18900	1880
19193	1909.3	19185	1908.5
LTE Band 2(5MHz)		LTE Band 2(10MHz)	
Channel	Frequency (MHz)	Channel	Frequency (MHz)
18625	1852.5	18650	1855
18900	1880	18900	1880
19175	1907.5	19150	1905
LTE Band 2(15MHz)		LTE Band 2(20MHz)	
Channel	Frequency (MHz)	Channel	Frequency (MHz)
18675	1857.5	18700	1860
18900	1880	18900	1880
19125	1902.5	19100	1900

LTE Band 4(1.4MHz)		LTE Band 4(3MHz)	
Channel	Frequency (MHz)	Channel	Frequency (MHz)
19957	1710.7	19965	1711.5
20175	1732.5	20175	1732.5
20393	1754.3	20385	1753.5
LTE Band 4(5MHz)		LTE Band 4(10MHz)	
Channel	Frequency (MHz)	Channel	Frequency (MHz)
19975	1712.5	20000	1715
20175	1732.5	20175	1732.5
20375	1752.5	20350	1750
LTE Band 4(15MHz)		LTE Band 4(20MHz)	
Channel	Frequency (MHz)	Channel	Frequency (MHz)
20025	1717.5	20050	1720
20175	1732.5	20175	1732.5
20325	1747.5	20300	1745

LTE Band 5(1.4MHz)		LTE Band 5(3MHz)	
Channel	Frequency (MHz)	Channel	Frequency (MHz)
20407	824.7	20415	825.5
20525	836.5	20525	836.5
20643	848.3	20635	847.5
LTE Band 5(5MHz)		LTE Band 5(10MHz)	
Channel	Frequency (MHz)	Channel	Frequency (MHz)
20425	826.5	20450	829
20525	836.5	20525	836.5
20625	846.5	20600	844

LTE Band 12(1.4MHz)		LTE Band 12(3MHz)	
Channel	Frequency (MHz)	Channel	Frequency (MHz)
23017	699.7	23025	700.5
23095	707.5	23095	707.5
23173	715.3	23165	714.5
LTE Band 12(5MHz)		LTE Band 12(10MHz)	
Channel	Frequency (MHz)	Channel	Frequency (MHz)
23035	701.5	23060	704
23095	707.5	23095	707.5
23155	713.5	23130	711

LTE Band 41(5MHz)		LTE Band 41(10MHz)	
Channel	Frequency (MHz)	Channel	Frequency (MHz)
39675	2498.5	39700	2501
40620	2593	40620	2593
41565	2687.5	41540	2685
LTE Band 41(15MHz)		LTE Band 41(20MHz)	
Channel	Frequency (MHz)	Channel	Frequency (MHz)
39725	2503.5	39750	2506
40620	2593	40620	2593
41515	2682.5	41490	2680

LTE Band 66(1.4MHz)		LTE Band 66(3MHz)	
Channel	Frequency (MHz)	Channel	Frequency (MHz)
131979	1710.7	131987	1711.5
132422	1755	132422	1755
132665	1779.3	132657	1778.5
LTE Band 66(5MHz)		LTE Band 66(10MHz)	
Channel	Frequency (MHz)	Channel	Frequency (MHz)
131997	1712.5	132022	1715
132422	1755	132422	1755
132647	1777.5	132622	1775
LTE Band 66(15MHz)		LTE Band 66(20MHz)	
132047	1717.5	132072	1720
132422	1755	132422	1755
132597	1772.5	132572	1770

LTE Band 71(5MHz)		LTE Band 71(10MHz)	
Channel	Frequency (MHz)	Channel	Frequency (MHz)
133147	665.5	133172	668
133297	680.5	133297	680.5
133447	695.5	133422	693
LTE Band 71(15MHz)		LTE Band 71(20MHz)	
133197	670.5	133222	673
133297	680.5	133322	683
133397	690.5	133372	688

2. Test Result Summary

Requirement	CFR 47 Section	Result
Conducted Output Power	§2.1046; §22.913; §24.232(c); §27.50(d); §27.50(c); §27.50(b)	PASS
Peak-to-Average Ratio	§2.1046; §24.232(d) §27.50(d); §27.50(c); §27.50(b)	PASS
Effective Radiated Power	§2.1046; §22.913; §24.232(c); §27.50(d); §27.50(c); §27.50(b)	PASS
Equivalent Isotropic Radiated Power	§2.1046; §22.913; §24.232(c); §27.50(d); §27.50(c); §27.50(b)	PASS
Occupied Bandwidth	§2.1049; §24.238(b); §27.53	PASS
Band Edge	§2.1051; §22.917(a); §27.53(h); §27.53(c); §27.53(g); §24.238(a)	PASS
Conducted Spurious Emission	§2.1051; §22.917(a); §27.53(h); §27.53(g); §27.53(c); §24.238(a)	PASS
Field Strength of Spurious Radiation	§2.1053; §22.917(a); §27.53(g); §27.53(c); §27.53(h); §24.238(a)	PASS
Frequency Stability for Temperature & Voltage	§2.1055; §22.355; §27.54; §24.235	PASS

Note:

1. *PASS: Test item meets the requirement.*
2. *Fail: Test item does not meet the requirement.*
3. *N/A: Test case does not apply to the test object.*
4. *The test result judgment is decided by the limit of test standard.*

3. General Information

3.1. Test environment and mode

Operating Environment:	
Temperature:	25.0 °C
Humidity:	56 % RH
Atmospheric Pressure:	1010 mbar
Remark: This product has a built-in rechargeable battery, so in an independent test, the EUT battery was fully-charged.	

Keep the EUT in communication with CMW500 and select channel with modulation
All modes and data rates and positions were investigated.
Test modes are chosen to be reported as the worst case configuration below:

Test Mode		
Band	**Radiated TCs**	**Conducted TCs**
LTE Band 2	QPSK Link (1.4MHz / 3MHz / 5MHz / 10MHz / 15MHz / 20MHz)	16QAM Link (1.4MHz / 3MHz / 5MHz / 10MHz / 15MHz / 20MHz)
LTE Band 4	QPSK Link (1.4MHz / 3MHz / 5MHz / 10MHz / 15MHz / 20MHz)	16QAM Link (1.4MHz / 3MHz / 5MHz / 10MHz / 15MHz / 20MHz)
LTE Band 5	QPSK Link (1.4MHz / 3MHz / 5MHz / 10MHz)	16QAM Link (1.4MHz / 3MHz / 5MHz / 10MHz)
LTE Band 12	QPSK Link (1.4MHz / 3MHz / 5MHz / 10MHz)	16QAM Link (1.4MHz / 3MHz / 5MHz / 10MHz)
LTE Band 41	QPSK Link (5MHz / 10MHz / 15MHz / 20MHz)	16QAM Link (5MHz / 10MHz / 15MHz / 20MHz)
LTE Band 66	QPSK Link (1.4MHz / 3MHz / 5MHz / 10MHz / 15MHz / 20MHz)	16QAM Link (1.4MHz / 3MHz / 5MHz / 10MHz / 15MHz / 20MHz)
LTE Band 71	QPSK Link (5MHz /10MHz / 15MHz / 20MHz)	16QAM Link (5MHz /10MHz / 15MHz / 20MHz)

Antenna port conducted and radiated test items were performed according to KDB 971168 D01 Power Meas License Digital Systems v03 with maximum output power. Radiated measurements were performed with rotating EUT in different three orthogonal test planes to find the maximum emission. The sample was placed 0.8m/1.5m above the ground plane of 3m chamber. Measurements in both horizontal and vertical polarities were performed. During the test, each emission was maximized by: having the EUT continuously working, investigated all operating modes, rotated about all 3 axis (X, Y & Z)

and considered typical configuration to obtain worst position, manipulating interconnecting cables, rotating the turntable, varying antenna height from 1m to 4m in both horizontal and vertical polarization. The emissions worst-case are shown in Test Results of the following pages.

Test Items	Band	Bandwidth (MHz)						Modulation		RB #			Test Channel		
		1.4	3	5	10	15	20	QPSK	16QAM	1	Half	Full	L	M	H
Max. Output Power	2	v	v	v	v	v	v	v	v	v	v	v	v	v	v
	4	v	v	v	v	v	v	v	v	v	v	v	v	v	v
	5	v	v	v	v	-	-	v	v	v	v	v	v	v	v
	12	v	v	v	v	-	-	v	v	v	v	v	v	v	v
	41	-	-	v	v	v	v	v	v	v	v	v	v	v	v
	66	v	v	v	v	v	v	v	v	v	v	v	v	v	v
	71	-	-	v	v	v	v	v	v	v	v	v	v	v	v
Peak-to-Average Ratio	2	v	v	v	v	v	v	v	v	v	v	v	v	v	v
	4	v	v	v	v	v	v	v	v	v	v	v	v	v	v
	5	v	v	v	v	-	-	v	v	v	v	v	v	v	v
	12	v	v	v	v	-	-	v	v	v	v	v	v	v	v
	41	-	-	v	v	v	v	v	v	v	v	v	v	v	v
	66	v	v	v	v	v	v	v	v	v	v	v	v	v	v
	71	-	-	v	v	v	v	v	v	v	v	v	v	v	v
26dB and 99% Bandwidth	2	v	v	v	v	v	v	v	v	v	v	v	v	v	v
	4	v	v	v	v	v	v	v	v	v	v	v	v	v	v
	5	v	v	v	v	-	-	v	v	v	v	v	v	v	v
	12	v	v	v	v	-	-	v	v	v	v	v	v	v	v
	41	-	-	v	v	v	v	v	v	-	-	v	v	v	v
	66	v	v	v	v	v	v	v	v	v	v	v	v	v	v
	71	-	-	v	v	v	v	v	v	v	v	v	v	v	v
Conducted Band Edge	2	v	v	v	v	v	v	v	v	v	v	v	v	-	v
	4	v	v	v	v	v	v	v	v	v	v	v	v	-	v
	5	v	v	v	v	-	-	v	v	v	v	v	v	-	v
	12	v	v	v	v	-	-	v	v	v	v	v	v	-	v
	41	-	-	v	v	v	v	v	v	v	v	v	v	-	v
	66	v	v	v	v	v	v	v	v	v	v	v	v	-	v
	71	-	-	v	v	v	v	v	v	v	v	v	v	-	v
Conducted Spurious Emission	2	v	v	v	v	v	v	v	v	v	-	-	v	v	v
	4	v	v	v	v	v	v	v	v	v	-	-	v	v	v
	5	v	v	v	v	-	-	v	v	v	-	-	v	v	v

	12	v	v	v	v	-	-	v	v	v	-	-	v	v	v
	41	-	-	v	v	v	v	v	v	v	-	-	v	v	v
	66	v	v	v	v	v	v	v	v	v	-	-	v	v	v
	71	-	-	v	v	v	v	v	v	v	-	-	v	v	v
Frequency Stability	2	v	v	v	v	v	v	v	v	v	-	-	v	v	v
	4	v	v	v	v	v	v	v	v	v	-	-	v	v	v
	5	v	v	v	v	-	-	v	v	v	-	-	v	v	v
	12	v	v	v	v	-	-	v	v	v	-	-	v	v	v
	41	-	-	v	v	v	v	v	v	v	-	-	v	v	v
	66	v	v	v	v	v	v	v	v	v	-	-	v	v	v
	71	-	-	v	v	v	v	v	v	v	-	-	v	v	v
E.R.P./ E.I.R.P.	2	v	v	v	v	v	v	v	v	v	v	v	v	v	v
	4	v	v	v	v	v	v	v	v	v	v	v	v	v	v
	5	v	v	v	v	-	-	v	v	v	v	v	v	v	v
	12	v	v	v	v	-	-	v	v	v	v	v	v	v	v
	41	-	-	v	v	v	v	v	v	v	v	v	v	v	v
	66	v	v	v	v	v	v	v	v	v	v	v	v	v	v
	71	-	-	v	v	v	v	v	v	v	v	v	v	v	v
Radiated Spurious Emission	2	-	-	-	-	-	v	v	v	v	-	-	v	v	v
	4	-	-	-	-	-	v	v	v	v	-	-	v	v	v
	5	-	-	-	v	-	-	v	v	v	-	-	v	v	v
	12	-	-	-	v	-	-	v	v	v	-	-	v	v	v
	41	-	-	-	-	-	v	v	v	v	-	-	v	v	v
	66	-	-	-	-	-	v	v	v	v	-	-	v	v	v
	71	-	-	-	-	-	v	v	v	v	-	-	v	v	v
Note	1. The mark "v " means that this configuration is chosen for testing 2. The mark "-" means that this bandwidth is not supported.														

3.2. Description of Support Units

The EUT has been tested as an independent unit together with other necessary accessories or support units. The following support units or accessories were used to form a representative test configuration during the tests.

Equipment	Model No.	Serial No.	FCC ID	Trade Name
/	/	/	/	/

Note:

1. All the equipment/cables were placed in the worst-case configuration to maximize the emission during the test.

2. Grounding was established in accordance with the manufacturer's requirements and conditions for the intended use.

3.3. Configuration of Tested System

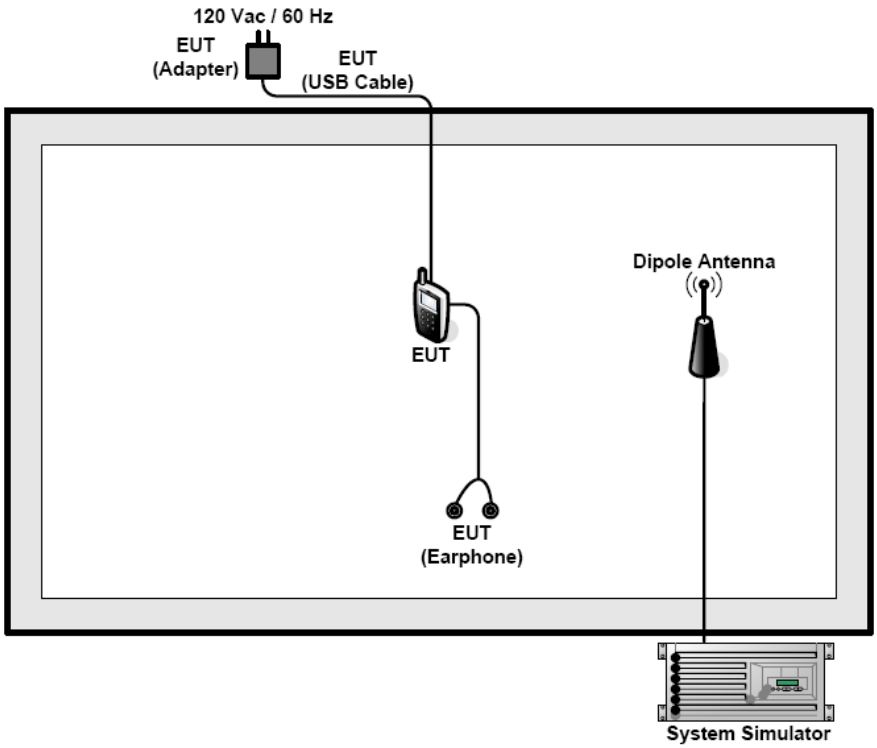

3.4. Measurement Results Explanation Example

For all conducted test items:

The offset level is set in the spectrum analyzer to compensate the RF cable loss and attenuator factor between RF conducted output port and spectrum analyzer. With the offset compensation, the spectrum analyzer reading level will be exactly the RF output level. The spectrum analyzer offset is derived from RF cable loss and attenuator factor.

Offset = RF cable loss + attenuator factor.

4. Facilities and Accreditations

4.1. Facilities

The test facility is recognized, certified, or accredited by the following organizations:

- FCC - Registration No.: 645098
  SHENZHEN TONGCE TESTING LAB
  Designation Number: CN1205
  The testing lab has been registered and fully described in a report with the (FCC) Federal Communications Commission. The acceptance letter from the FCC is maintained in our files.
- IC - Registration No.: 10668A-1
  SHENZHEN TONGCE TESTING LAB
  CAB identifier: CN0031
  The testing lab has been registered by Certification and Engineering Bureau of Industry Canada for radio equipment testing.

4.2. Location

SHENZHEN TONGCE TESTING LAB
Address: 2101 & 2201, Zhenchang Factory, Renshan Industrial Zone, Fuhai Subdistrict, Bao'an District, Shenzhen, Guangdong, 518103, People's Republic of China
TEL: 86-755-27673339

4.3. Measurement Uncertainty

The reported uncertainty of measurement y ± U, where expended uncertainty U is based on a standard uncertainty multiplied by a coverage factor of k=2, providing a level of confidence of approximately 95 %.

No.	Item	MU
1	Conducted Emission	± 3.10 dB
2	RF power, conducted	± 0.12 dB
3	Spurious emissions, conducted	± 0.11 dB
4	All emissions, radiated(<1 GHz)	± 4.56 dB
5	All emissions, radiated(1 GHz - 18 GHz)	± 4.22 dB
6	All emissions, radiated(18 GHz- 40 GHz)	± 4.36 dB

5. Test Results and Measurement Data

5.1. Effective Radiated Power and Effective Isotropic Radiated Power Measurement

5.1.1. Test Specification

Test Requirement:	FCC part 27.50(c), FCC part 27.50(d) and FCC part 27.50(h), FCC part 24.232(c), FCC part 22.913
Test Method:	FCC part 2.1046
Limit:	LTE Band 2: 2W LTE Band 4: 1W LTE Band 5: 7W LTE Band 12: 3W LTE Band 41: 2W LTE Band 66: 1W LTE Band 71: 3W
Test Setup:	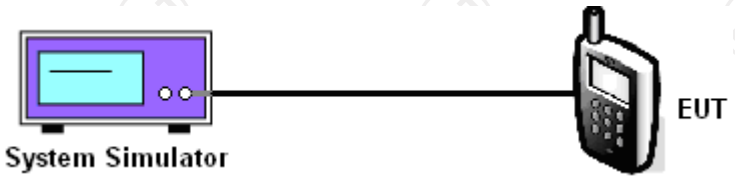
Test Procedure:	1. The transmitter output port was connected to the system simulator. 2. Set EUT at maximum power through system simulator. 3. Select lowest, middle, highest channels for each band and different modulation. 4. Measure and record the power level from the system simulator. 5. Calculate the ERP and EIRP The relevant equation for determining the ERP or EIRP from the conducted RF output power measured using the guidance provided above is: ERP or EIRP = $P_{Meas} + G_T - L_C$ where: ERP or EIRP = effective radiated power or equivalent isotropically radiated power, respectively (expressed in the same units as P Meas , typically dBW or dBm); P_{Meas} = measured transmitter output power or PSD, in dBm or dBW; G_T = gain of the transmitting antenna, in dBd (ERP) or dBi (EIRP);

	L_C = signal attenuation in the connecting cable between the transmitter and antenna, in dB. *Note: For personal/portable radios utilizing an integral antenna, the factor L C is typically negligible. However, in a fixed station transmit system that utilizes a long cable run between the transmitter and the transmitting antenna, this factor can be significant.*
Test Result:	PASS

5.1.2. Test Instruments

Equipment	Manufacturer	Model	Serial Number	Calibration Due
Wideband Radio Communication Tester	R&S	CMW500	114220	Jan. 31, 2025
Combiner Box	Ascentest	AT890-RFB	/	/

5.2. Peak to Average Ratio

5.2.1. Test Specification

Test Requirement:	FCC part 2.1046; 22.913; 24.232; 27.50(d); 27.50(c); 27.50(b)
Test Method:	FCC KDB 971168 D01v03
Limit:	The peak-to-average ratio (PAR) of the transmission may not exceed 13 dB.
Test Setup:	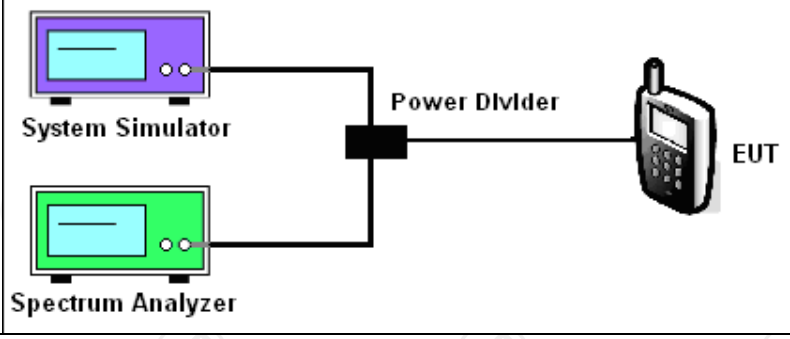
Test Procedure:	1. The testing follows FCC KDB 971168 D01v03 Section 5.7.1. 2. The EUT was connected to spectrum analyzer and system simulator via a power divider. 3. Set EUT to transmit at maximum output power. 4. Set the CCDF (Complementary Cumulative Distribution Function) option of the spectrum analyzer. Record the maximum PAPR level associated with a probability of 0.1%.
Test Result:	PASS

5.2.2. Test Instruments

Equipment	Manufacturer	Model	Serial Number	Calibration Due
Wideband Radio Communication Tester	R&S	CMW500	114220	Jan. 31, 2025
Spectrum Analyzer	R&S	FSV40-N	102188	Jan. 31, 2025
Combiner Box	Ascentest	AT890-RFB	/	/

5.3. 99% Occupied Bandwidth and 26dB Bandwidth Measurement

5.3.1. Test Specification

Test Requirement:	FCC part 27.53(h)(3) and FCC part 27.53(m)(6), FCC part 24.238(b)
Test Method:	FCC part 2.1049
Limit:	N/A
Test Setup:	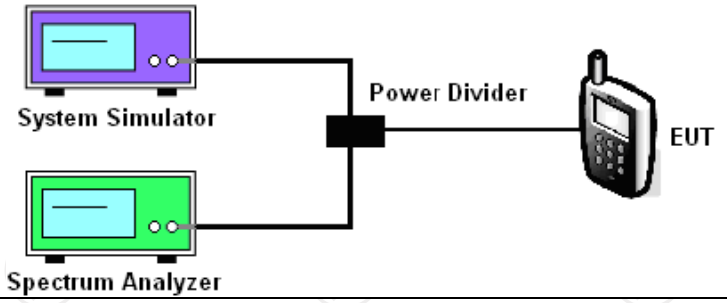
Test Procedure:	1. The testing follows FCC KDB 971168 D01v03 Section 4.2. 2. The EUT was connected to the spectrum analyzer and system simulator via a power divider. 3. The RF output of the EUT was connected to the spectrum analyzer by RF cable and attenuator. The path loss was compensated to the results for each measurement. 4. The 99% occupied bandwidth were measured, set RBW= 1% of OBW, VBW= 3*RBW, sample detector, trace maximum hold. 5. The 26dB bandwidth were measured, set RBW= 1% of EBW, VBW= 3*RBW, peak detector, trace maximum hold.
Test Result:	PASS

5.3.2. Test Instruments

Equipment	Manufacturer	Model	Serial Number	Calibration Due
Wideband Radio Communication Tester	R&S	CMW500	114220	Jan. 31, 2025
Spectrum Analyzer	R&S	FSV40-N	102188	Jan. 31, 2025
Combiner Box	Ascentest	AT890-RFB	/	/

5.4. Band Edge and Conducted Spurious Emission Measurement

5.4.1. Test Specification

Test Requirement:	FCC part 27.53(h), FCC part 27.53(g) , FCC part 27.53(m)(4), FCC part 24.238(a), 22.917(a)
Test Method:	FCC part2.1051
Limit:	For LTE Band 2,4,5,12,66,77: -13dBm; For LTE Band 41: the power of any unwanted emissions measured as above shall be attenuated (in dB) below the transmitter power, P (dBW), by at least: (i) 40 + 10 log10 p from the channel edges to 5 MHz away (ii) 43 + 10 log10 p between 5 MHz and X MHz from the channel edges, and (iii) 55 + 10 log10 p at X MHz and beyond from the channel edges. In addition, the attenuation shall not be less than 43 + 10 log10 p on all frequencies between 2490.5 MHz and 2496 MHz, and 55 + 10 log10 p at or below 2490.5 MHz.
Test Setup:	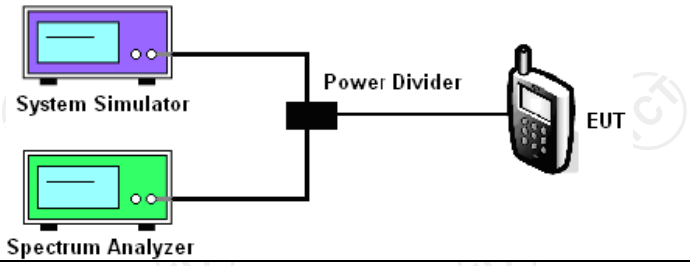
Test Procedure:	1. The testing follows FCC KDB 971168 D01v03 Section 6.0. 2. The EUT was connected to the spectrum analyzer and system simulator via a power divider. 3. The RF output of EUT was connected to the spectrum analyzer by an RF cable and attenuator. The path loss was compensated to the results for each measurement. 4. The band edges of low and high channels for the highest RF powers were measured. 5. The conducted spurious emission for the whole frequency range was taken. 6. The RF fundamental frequency should be excluded against the limit line in the operating frequency band.
Test Result:	PASS

5.4.2. Test Instruments

Equipment	Manufacturer	Model	Serial Number	Calibration Due
Wideband Radio Communication Tester	R&S	CMW500	114220	Jan. 31, 2025
Spectrum Analyzer	R&S	FSV40-N	102188	Jan. 31, 2025
Combiner Box	Ascentest	AT890-RFB	/	/

5.5. Field Strength of Spurious Radiation Measurement

5.5.1. Test Specification

Test Requirement:	FCC part 27.53(g), FCC part 27.53(h), FCC part 27.53(m)(4), FCC part 22.917(a), 24.238(b)
Test Method:	FCC part 2.1053
Limit:	For LTE Band 2,4,5,12,66,77: -13dBm; For LTE Band 41: -25dBm
Test setup:	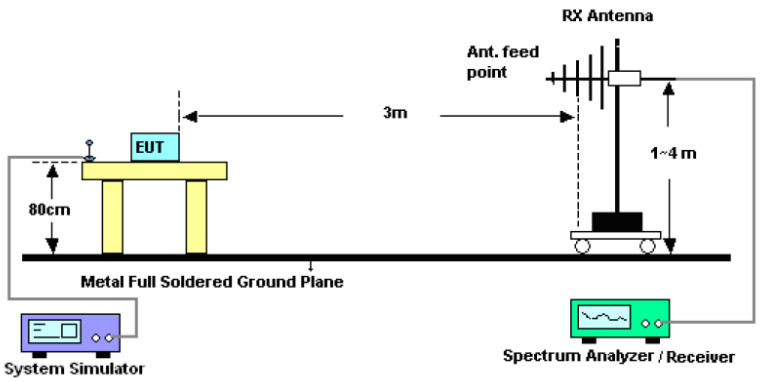 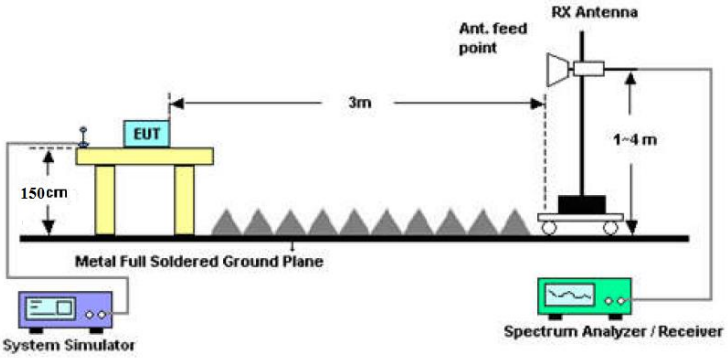
Test Procedure:	1. The testing follows FCC KDB 971168 D01v03 Section 5.8 and ANSI / TIA-603-D-2010Section 2.2.12. 2. The EUT was placed on a rotatable wooden table 0.8 meters above the ground. 3. The EUT was set 3 meters from the receiving antenna, which was mounted on the antenna tower. 4. The table was rotated 360 degrees to determine the position of the highest spurious emission. 5. The height of the receiving antenna is varied between one meter and four meters to search for the maximum spurious emission for both horizontal and vertical polarizations. 6. Make the measurement with the spectrum analyzer's RBW = 1MHz, VBW = 3MHz, taking record of maximum spurious emission.

	7. A horn antenna was substituted in place of the EUT and was driven by a signal generator. 8. Tune the output power of signal generator to the same emission level with EUT maximum spurious emission. 9. Taking the record of output power at antenna port. 10. Repeat step 7 to step 8 for another polarization. 11. EIRP (dBm) = S.G. Power – Tx Cable Loss + Tx Antenna Gain 12. ERP (dBm) = EIRP - 2.15 13. The RF fundamental frequency should be excluded against the limit line in the operating frequency band.
Test results:	PASS
Remark:	All modulations have been tested, but only the worst modulation show in this test item.

5.5.2. Test Instruments

Radiated Emission Test Site (966)				
Name of Equipment	**Manufacturer**	**Model**	**Serial Number**	**Calibration Due**
Universal Radio Communication Tester	R&S	CMU200	110188	Jun. 28, 2024
Spectrum Analyzer	R&S	FSQ40	200061	Jun. 29, 2024
Signal Generator	Agilent	N5173B	MY58108823	Jan. 31, 2025
Broadband Antenna	Schwarzbeck	VULB9163	340	Jul. 01, 2024
Horn Antenna	Schwarzbeck	BBHA 9120D	631	Jul. 01, 2024
Broadband Antenna	Schwarzbeck	VULB9163	412	Jul. 01, 2024
Horn Antenna	Schwarzbeck	BBHA 9120D	1201	Jul. 01, 2024
Horn Antenna	Schwarzbeck	BBHA 9170	00956	Feb. 02, 2025
Coaxial cable	SKET	RC-18G-N-M	/	Jan. 31, 2025
Coaxial cable	SKET	RC_40G-K-M	/	Jan. 31, 2025
Antenna Mast	Keleto	RE-AM	/	/
EMI Test Software	Shurple Technology	EZ-EMC	/	/

5.5.3. Test Data

Frequency Range (9 kHz-30MHz)

Frequency (MHz)	Level@3m (dBμV/m)	Limit@3m (dBμV/m)
--	--	--
--	--	--
--	--	--
--	--	--

Note: *1. Emission Level=Reading+ Cable loss + Antenna factor-Amp factor*

2. The emission levels are 20 dB below the limit value, which are not reported. It is deemed to comply with the requirement

Hotline: 400-6611-140 Tel: 86-755-27673339 Fax: 86-755-27673332 http://www.tct-lab.com

Band	Band 2(QPSK, 20MHz)	Test channel:	Lowest
Test mode:		Temperature:	25°C
		Relative Humidity:	56%

Note: Spurious emissions within 30-1000MHz were found more than 20dB below limit line.

Frequency (MHz)	Spurious Emission				Limit (dBm)	Result
	Polarization	Level (dBm)	Correction Factor (dB)	Spurious emissions (dBm)		
3720.00	Vertical	-61.32	23.54	-37.78	-13.00	PASS
5580.00	V	-66.29	23.81	-42.48		
7440.00	V	-81.55	23.96	-57.59		
3720.00	Horizontal	-60.62	23.54	-37.08		
5580.00	H	-67.59	23.81	-43.78		
7440.00	H	-80.08	23.96	-56.12		

Band	Band 2(QPSK, 20MHz)	Test channel:	Middle
Test mode:		Temperature:	25°C
		Relative Humidity:	56%

Note: Spurious emissions within 30-1000MHz were found more than 20dB below limit line.

Frequency (MHz)	Spurious Emission				Limit (dBm)	Result
	Polarization	Level (dBm)	Correction Factor (dB)	Spurious emissions (dBm)		
3760.00	Vertical	-62.90	23.58	-39.32	-13.00	PASS
5640.00	V	-75.21	23.85	-51.36		
7520.00	V	-83.25	23.99	-59.26		
3760.00	Horizontal	-61.39	23.58	-37.81		
5640.00	H	-67.31	23.85	-43.46		
7520.00	H	-82.08	23.99	-58.09		

Band	Band 2(QPSK, 20MHz)	Test channel:	Highest
Test mode:		Temperature:	25°C
		Relative Humidity:	56%

Note: Spurious emissions within 30-1000MHz were found more than 20dB below limit line.

Frequency (MHz)	Spurious Emission				Limit (dBm)	Result
	Polarization	Level (dBm)	Correction Factor (dB)	Spurious emissions (dBm)		
3800.00	Vertical	-64.66	23.60	-41.06	-13.00	PASS
5700.00	V	-73.31	23.88	-49.43		
7600.00	V	-81.82	24.02	-57.80		
3800.00	Horizontal	-59.35	23.60	-35.75		
5700.00	H	-67.96	23.88	-44.08		
7600.00	H	-82.01	24.02	-57.99		

Band	Band 2(16QAM, 20MHz)	Test channel:	Lowest
Test mode:		Temperature:	25°C
		Relative Humidity:	56%

Note: Spurious emissions within 30-1000MHz were found more than 20dB below limit line.

Frequency (MHz)	Spurious Emission				Limit (dBm)	Result
	Polarization	Level (dBm)	Correction Factor (dB)	Spurious emissions (dBm)		
3720.00	Vertical	-62.22	23.54	-38.68	-13.00	PASS
5580.00	V	-68.61	23.81	-44.80		
7440.00	V	-80.76	23.96	-56.80		
3720.00	Horizontal	-61.51	23.54	-37.97		
5580.00	H	-67.68	23.81	-43.87		
7440.00	H	-79.49	23.96	-55.53		

Band	Band 2(16QAM, 20MHz)	Test channel:	Middle
Test mode:		Temperature:	25°C
		Relative Humidity:	56%

Note: Spurious emissions within 30-1000MHz were found more than 20dB below limit line.

Frequency (MHz)	Spurious Emission				Limit (dBm)	Result
	Polarization	Level (dBm)	Correction Factor (dB)	Spurious emissions (dBm)		
3760.00	Vertical	-64.90	23.58	-41.32	-13.00	PASS
5640.00	V	-71.87	23.85	-48.02		
7520.00	V	-80.33	23.99	-56.34		
3760.00	Horizontal	-59.51	23.58	-35.93		
5640.00	H	-68.42	23.85	-44.57		
7520.00	H	-82.89	23.99	-58.90		

Band	Band 2(16QAM, 20MHz)	Test channel:	Highest
Test mode:		Temperature:	25°C
		Relative Humidity:	56%

Note: Spurious emissions within 30-1000MHz were found more than 20dB below limit line.

Frequency (MHz)	Spurious Emission				Limit (dBm)	Result
	Polarization	Level (dBm)	Correction Factor (dB)	Spurious emissions (dBm)		
3800.00	Vertical	-63.96	23.60	-40.36	-13.00	PASS
5700.00	V	-73.72	23.88	-49.84		
7600.00	V	-82.16	24.02	-58.14		
3800.00	Horizontal	-60.20	23.60	-36.60		
5700.00	H	-68.65	23.88	-44.77		
7600.00	H	-83.87	24.02	-59.85		

Band	Band 4(QPSK, 20MHz)	Test channel:	Lowest
Test mode:		Temperature:	25°C
		Relative Humidity:	56%

Note: Spurious emissions within 30-1000MHz were found more than 20dB below limit line.

Frequency (MHz)	Spurious Emission				Limit (dBm)	Result
	Polarization	Level (dBm)	Correction Factor (dB)	Spurious emissions (dBm)		
3440.00	Vertical	-63.96	23.40	-40.56	-13.00	PASS
5160.00	V	-67.37	23.69	-43.68		
6880.00	V	-83.52	23.75	-59.77		
3440.00	Horizontal	-58.16	23.40	-34.76		
5160.00	H	-66.00	23.69	-42.31		
6880.00	H	-79.39	23.75	-55.64		

Band	Band 4(QPSK, 20MHz)	Test channel:	Middle
Test mode:		Temperature:	25°C
		Relative Humidity:	56%

Note: Spurious emissions within 30-1000MHz were found more than 20dB below limit line.

Frequency (MHz)	Spurious Emission				Limit (dBm)	Result
	Polarization	Level (dBm)	Correction Factor (dB)	Spurious emissions (dBm)		
3465.00	Vertical	-63.03	23.42	-39.61	-13.00	PASS
5197.50	V	-74.39	23.73	-50.66		
6930.00	V	-81.34	23.79	-57.55		
3465.00	Horizontal	-59.21	23.42	-35.79		
5197.50	H	-67.09	23.73	-43.36		
6930.00	H	-80.40	23.79	-56.61		

Band	Band 4(QPSK, 20MHz)	Test channel:	Highest
Test mode:		Temperature:	25°C
		Relative Humidity:	56%

Note: Spurious emissions within 30-1000MHz were found more than 20dB below limit line.

Frequency (MHz)	Spurious Emission				Limit (dBm)	Result
	Polarization	Level (dBm)	Correction Factor (dB)	Spurious emissions (dBm)		
3490.00	Vertical	-64.51	23.46	-41.05	-13.00	PASS
5235.00	V	-73.01	23.77	-49.24		
6980.00	V	-80.13	23.81	-56.32		
3490.00	Horizontal	-60.74	23.46	-37.28		
5235.00	H	-69.05	23.77	-45.28		
6980.00	H	-83.51	23.81	-59.70		

Band	Band 4(16QAM, 20MHz)	Test channel:	Lowest
Test mode:		Temperature:	25°C
		Relative Humidity:	56%

Note: Spurious emissions within 30-1000MHz were found more than 20dB below limit line.

Frequency (MHz)	Spurious Emission				Limit (dBm)	Result
	Polarization	Level (dBm)	Correction Factor (dB)	Spurious emissions (dBm)		
3440.00	Vertical	-62.02	23.40	-38.62	-13.00	PASS
5160.00	V	-69.18	23.69	-45.49		
6880.00	V	-81.43	23.75	-57.68		
3440.00	Horizontal	-60.57	23.40	-37.17		
5160.00	H	-68.83	23.69	-45.14		
6880.00	H	-80.51	23.75	-56.76		

Band	Band 4(16QAM, 20MHz)	Test channel:	Middle
Test mode:		Temperature:	25°C
		Relative Humidity:	56%

Note: Spurious emissions within 30-1000MHz were found more than 20dB below limit line.

Frequency (MHz)	Spurious Emission				Limit (dBm)	Result
	Polarization	Level (dBm)	Correction Factor (dB)	Spurious emissions (dBm)		
3465.00	Vertical	-61.13	23.42	-37.71	-13.00	PASS
5197.50	V	-72.39	23.73	-48.66		
6930.00	V	-81.38	23.79	-57.59		
3465.00	Horizontal	-61.24	23.42	-37.82		
5197.50	H	-68.01	23.73	-44.28		
6930.00	H	-81.26	23.79	-57.47		

Band	Band 4(16QAM, 20MHz)	Test channel:	Highest
Test mode:		Temperature:	25°C
		Relative Humidity:	56%

Note: Spurious emissions within 30-1000MHz were found more than 20dB below limit line.

Frequency (MHz)	Spurious Emission				Limit (dBm)	Result
	Polarization	Level (dBm)	Correction Factor (dB)	Spurious emissions (dBm)		
3490.00	Vertical	-64.02	23.46	-40.56	-13.00	PASS
5235.00	V	-73.33	23.77	-49.56		
6980.00	V	-82.58	23.81	-58.77		
3490.00	Horizontal	-60.40	23.46	-36.94		
5235.00	H	-70.96	23.77	-47.19		
6980.00	H	-83.12	23.81	-59.31		

Band	Band 5(QPSK, 10MHz)	Test channel:	Lowest
Test mode:		Temperature:	25°C
		Relative Humidity:	56%

Note: Spurious emissions within 30-1000MHz were found more than 20dB below limit line.

Frequency (MHz)	Spurious Emission				Limit (dBm)	Result
	Polarization	Level (dBm)	Correction Factor (dB)	Spurious emissions (dBm)		
1658.00	Vertical	-64.06	23.15	-40.91	-13.00	PASS
2487.00	V	-67.55	23.24	-44.31		
3316.00	V	-83.42	23.35	-60.07		
1658.00	Horizontal	-62.96	23.15	-39.81		
2487.00	H	-65.33	23.24	-42.09		
3316.00	H	-78.11	23.35	-54.76		

Band	Band 5(QPSK, 10MHz)	Test channel:	Middle
Test mode:		Temperature:	25°C
		Relative Humidity:	56%

Note: Spurious emissions within 30-1000MHz were found more than 20dB below limit line.

Frequency (MHz)	Spurious Emission				Limit (dBm)	Result
	Polarization	Level (dBm)	Correction Factor (dB)	Spurious emissions (dBm)		
1673.00	Vertical	-62.03	23.17	-38.86	-13.00	PASS
2509.50	V	-74.20	23.26	-50.94		
3346.00	V	-79.77	23.38	-56.39		
1673.00	Horizontal	-61.15	23.17	-37.98		
2509.50	H	-66.37	23.26	-43.11		
3346.00	H	-81.59	23.38	-58.21		

Band	Band 5(QPSK, 10MHz)	Test channel:	Highest
Test mode:		Temperature:	25°C
		Relative Humidity:	56%

Note: Spurious emissions within 30-1000MHz were found more than 20dB below limit line.

Frequency (MHz)	Spurious Emission				Limit (dBm)	Result
	Polarization	Level (dBm)	Correction Factor (dB)	Spurious emissions (dBm)		
1688.00	Vertical	-65.22	23.19	-42.03	-13.00	PASS
2532.00	V	-74.64	23.28	-51.36		
3376.00	V	-86.39	23.40	-62.99		
1688.00	Horizontal	-60.40	23.19	-37.21		
2532.00	H	-69.19	23.28	-45.91		
3376.00	H	-84.34	23.40	-60.94		

Band	Band 5(16QAM, 10MHz)	Test channel:	Lowest
Test mode:		Temperature:	25°C
		Relative Humidity:	56%

Note: Spurious emissions within 30-1000MHz were found more than 20dB below limit line.

Frequency (MHz)	Spurious Emission				Limit (dBm)	Result
	Polarization	Level (dBm)	Correction Factor (dB)	Spurious emissions (dBm)		
1658.00	Vertical	-61.53	23.15	-38.38	-13.00	PASS
2487.00	V	-67.39	23.24	-44.15		
3316.00	V	-84.28	23.35	-60.93		
1658.00	Horizontal	-61.57	23.15	-38.42		
2487.00	H	-68.47	23.24	-45.23		
3316.00	H	-81.19	23.35	-57.84		

Band	Band 5(16QAM, 10MHz)	Test channel:	Middle
Test mode:		Temperature:	25°C
		Relative Humidity:	56%

Note: Spurious emissions within 30-1000MHz were found more than 20dB below limit line.

Frequency (MHz)	Spurious Emission				Limit (dBm)	Result
	Polarization	Level (dBm)	Correction Factor (dB)	Spurious emissions (dBm)		
1673.00	Vertical	-61.31	23.17	-38.14	-13.00	PASS
2509.50	V	-74.56	23.26	-51.30		
3346.00	V	-80.49	23.38	-57.11		
1673.00	Horizontal	-59.35	23.17	-36.18		
2509.50	H	-68.44	23.26	-45.18		
3346.00	H	-81.22	23.38	-57.84		

Band	Band 5(16QAM, 10MHz)	Test channel:	Highest
Test mode:		Temperature:	25°C
		Relative Humidity:	56%

Note: Spurious emissions within 30-1000MHz were found more than 20dB below limit line.

Frequency (MHz)	Spurious Emission				Limit (dBm)	Result
	Polarization	Level (dBm)	Correction Factor (dB)	Spurious emissions (dBm)		
1688.00	Vertical	-63.43	23.19	-40.24	-13.00	PASS
2532.00	V	-73.80	23.28	-50.52		
3376.00	V	-80.44	23.40	-57.04		
1688.00	Horizontal	-60.50	23.19	-37.31		
2532.00	H	-69.58	23.28	-46.30		
3376.00	H	-84.34	23.40	-60.94		

Band	Band 12(QPSK, 10MHz)	Test channel:	Lowest
Test mode:		Temperature:	25°C
		Relative Humidity:	56%

Note: Spurious emissions within 30-1000MHz were found more than 20dB below limit line.

Frequency (MHz)	Spurious Emission				Limit (dBm)	Result
	Polarization	Level (dBm)	Correction Factor (dB)	Spurious emissions (dBm)		
1408.00	Vertical	-62.22	23.03	-39.19	-13.00	PASS
2112.00	V	-68.69	23.16	-45.53		
2816.00	V	-83.45	23.25	-60.20		
1408.00	Horizontal	-63.27	23.03	-40.24		
2112.00	H	-64.81	23.16	-41.65		
2816.00	H	-80.90	23.25	-57.65		

Band	Band 12(QPSK, 10MHz)	Test channel:	Middle
Test mode:		Temperature:	25°C
		Relative Humidity:	56%

Note: Spurious emissions within 30-1000MHz were found more than 20dB below limit line.

Frequency (MHz)	Spurious Emission				Limit (dBm)	Result
	Polarization	Level (dBm)	Correction Factor (dB)	Spurious emissions (dBm)		
1415.00	Vertical	-60.36	23.05	-37.31	-13.00	PASS
2122.50	V	-72.13	23.18	-48.95		
2830.00	V	-82.66	23.28	-59.38		
1415.00	Horizontal	-59.38	23.05	-36.33		
2122.50	H	-66.18	23.18	-43.00		
2830.00	H	-80.82	23.28	-57.54		

Band	Band 12(QPSK, 10MHz)	Test channel:	Highest
Test mode:		Temperature:	25°C
		Relative Humidity:	56%

Note: Spurious emissions within 30-1000MHz were found more than 20dB below limit line.

Frequency (MHz)	Spurious Emission				Limit (dBm)	Result
	Polarization	Level (dBm)	Correction Factor (dB)	Spurious emissions (dBm)		
1422.00	Vertical	-65.36	23.08	-42.28	-13.00	PASS
2133.00	V	-75.91	23.20	-52.71		
2844.00	V	-86.18	23.31	-62.87		
1422.00	Horizontal	-61.40	23.08	-38.32		
2133.00	H	-67.05	23.20	-43.85		
2844.00	H	-84.58	23.31	-61.27		

Band	Band 12(16QAM, 10MHz)	Test channel:	Lowest
Test mode:		Temperature:	25°C
		Relative Humidity:	56%

Note: Spurious emissions within 30-1000MHz were found more than 20dB below limit line.

Frequency (MHz)	Spurious Emission				Limit (dBm)	Result
	Polarization	Level (dBm)	Correction Factor (dB)	Spurious emissions (dBm)		
1408.00	Vertical	-62.67	23.03	-39.64	-13.00	PASS
2112.00	V	-65.53	23.16	-42.37		
2816.00	V	-84.69	23.25	-61.44		
1408.00	Horizontal	-62.70	23.03	-39.67		
2112.00	H	-66.81	23.16	-43.65		
2816.00	H	-82.39	23.25	-59.14		

Band	Band 12(16QAM, 10MHz)	Test channel:	Middle
Test mode:		Temperature:	25°C
		Relative Humidity:	56%

Note: Spurious emissions within 30-1000MHz were found more than 20dB below limit line.

Frequency (MHz)	Spurious Emission				Limit (dBm)	Result
	Polarization	Level (dBm)	Correction Factor (dB)	Spurious emissions (dBm)		
1415.00	Vertical	-61.06	23.05	-38.01	-13.00	PASS
2122.50	V	-72.76	23.18	-49.58		
2830.00	V	-82.01	23.28	-58.73		
1415.00	Horizontal	-60.28	23.05	-37.23		
2122.50	H	-68.40	23.18	-45.22		
2830.00	H	-82.12	23.28	-58.84		

Band	Band 12(16QAM, 10MHz)	Test channel:	Highest
Test mode:		Temperature:	25°C
		Relative Humidity:	56%

Note: Spurious emissions within 30-1000MHz were found more than 20dB below limit line.

Frequency (MHz)	Spurious Emission				Limit (dBm)	Result
	Polarization	Level (dBm)	Correction Factor (dB)	Spurious emissions (dBm)		
1422.00	Vertical	-64.22	23.08	-41.14	-13.00	PASS
2133.00	V	-72.74	23.20	-49.54		
2844.00	V	-80.65	23.31	-57.34		
1422.00	Horizontal	-60.31	23.08	-37.23		
2133.00	H	-67.25	23.20	-44.05		
2844.00	H	-82.46	23.31	-59.15		

Band	Band 41(QPSK, 20MHz)	Test channel:	Lowest
Test mode:		Temperature:	25°C
		Relative Humidity:	56%

Note: Spurious emissions within 30-1000MHz were found more than 20dB below limit line.

Frequency (MHz)	Spurious Emission				Limit (dBm)	Result
	Polarization	Level (dBm)	Correction Factor (dB)	Spurious emissions (dBm)		
5012.00	Vertical	-63.02	22.16	-40.86	-25.00	PASS
7518.00	V	-69.47	22.99	-46.48		
10024.00	V	-83.82	23.04	-60.78		
5012.00	Horizontal	-65.01	22.16	-42.85		
7518.00	H	-65.69	22.99	-42.70		
10024.00	H	-81.31	23.04	-58.27		

Band	Band 41(QPSK, 20MHz)	Test channel:	Middle
Test mode:		Temperature:	25°C
		Relative Humidity:	56%

Note: Spurious emissions within 30-1000MHz were found more than 20dB below limit line.

Frequency (MHz)	Spurious Emission				Limit (dBm)	Result
	Polarization	Level (dBm)	Correction Factor (dB)	Spurious emissions (dBm)		
5186.00	Vertical	-64.11	22.76	-41.35	-25.00	PASS
7779.00	V	-73.24	23.07	-50.17		
10372.00	V	-84.26	23.11	-61.15		
5186.00	Horizontal	-60.83	22.76	-38.07		
7779.00	H	-66.92	23.07	-43.85		
10372.00	H	-81.65	23.11	-58.54		

Band	Band 41(QPSK, 20MHz)	Test channel:	Highest
Test mode:		Temperature:	25°C
		Relative Humidity:	56%

Note: Spurious emissions within 30-1000MHz were found more than 20dB below limit line.

Frequency (MHz)	Spurious Emission				Limit (dBm)	Result
	Polarization	Level (dBm)	Correction Factor (dB)	Spurious emissions (dBm)		
5360.00	Vertical	-65.20	22.42	-42.78	-25.00	PASS
8040.00	V	-74.79	22.33	-52.46		
10720.00	V	-86.14	23.00	-63.14		
5360.00	Horizontal	-60.79	22.42	-38.37		
8040.00	H	-69.28	22.33	-46.95		
10720.00	H	-85.55	23.00	-62.55		

Band	Band 41(16QAM, 20MHz)	Test channel:	Lowest
Test mode:		Temperature:	25°C
		Relative Humidity:	56%

Note: Spurious emissions within 30-1000MHz were found more than 20dB below limit line.

Frequency (MHz)	Spurious Emission				Limit (dBm)	Result
	Polarization	Level (dBm)	Correction Factor (dB)	Spurious emissions (dBm)		
5012.00	Vertical	-63.05	22.16	-40.89	-25.00	PASS
7518.00	V	-67.66	22.99	-44.67		
10024.00	V	-85.38	23.04	-62.34		
5012.00	Horizontal	-61.74	22.16	-39.58		
7518.00	H	-67.10	22.99	-44.11		
10024.00	H	-82.15	23.04	-59.11		

Band	Band 41(16QAM, 20MHz)	Test channel:	Middle
Test mode:		Temperature:	25°C
		Relative Humidity:	56%

Note: Spurious emissions within 30-1000MHz were found more than 20dB below limit line.

Frequency (MHz)	Spurious Emission				Limit (dBm)	Result
	Polarization	Level (dBm)	Correction Factor (dB)	Spurious emissions (dBm)		
5186.00	Vertical	-62.01	22.76	-39.25	-25.00	PASS
7779.00	V	-73.16	23.07	-50.09		
10372.00	V	-80.55	23.11	-57.44		
5186.00	Horizontal	-61.24	22.76	-38.48		
7779.00	H	-69.36	23.07	-46.29		
10372.00	H	-82.09	23.11	-58.98		

Band	Band 41(16QAM, 20MHz)	Test channel:	Highest
Test mode:		Temperature:	25°C
		Relative Humidity:	56%

Note: Spurious emissions within 30-1000MHz were found more than 20dB below limit line.

Frequency (MHz)	Spurious Emission				Limit (dBm)	Result
	Polarization	Level (dBm)	Correction Factor (dB)	Spurious emissions (dBm)		
5360.00	Vertical	-64.02	22.42	-41.60	-25.00	PASS
8040.00	V	-73.96	22.33	-51.63		
10720.00	V	-82.39	23.00	-59.39		
5360.00	Horizontal	-61.49	22.42	-39.07		
8040.00	H	-69.70	22.33	-47.37		
10720.00	H	-84.26	23.00	-61.26		

Band	Band 66(QPSK, 20MHz)	Test channel:	Lowest
Test mode:		Temperature:	25°C
		Relative Humidity:	56%

Note: Spurious emissions within 30-1000MHz were found more than 20dB below limit line.

Frequency (MHz)	Spurious Emission				Limit (dBm)	Result
	Polarization	Level (dBm)	Correction Factor (dB)	Spurious emissions (dBm)		
3440.00	Vertical	-65.12	23.40	-41.72	-13.00	PASS
5160.00	V	-67.84	23.69	-44.15		
6880.00	V	-86.51	23.75	-62.76		
3440.00	Horizontal	-62.14	23.40	-38.74		
5160.00	H	-66.65	23.69	-42.96		
6880.00	H	-80.46	23.75	-56.71		

Band	Band 66(QPSK, 20MHz)	Test channel:	Middle
Test mode:		Temperature:	25°C
		Relative Humidity:	56%

Note: Spurious emissions within 30-1000MHz were found more than 20dB below limit line.

Frequency (MHz)	Spurious Emission				Limit (dBm)	Result
	Polarization	Level (dBm)	Correction Factor (dB)	Spurious emissions (dBm)		
3510.00	Vertical	-62.02	23.42	-38.60	-13.00	PASS
5265.00	V	-72.74	23.73	-49.01		
7020.00	V	-82.18	23.79	-58.39		
3510.00	Horizontal	-60.33	23.42	-36.91		
5265.00	H	-65.15	23.73	-41.42		
7020.00	H	-81.57	23.79	-57.78		

Band	Band 66(QPSK, 20MHz)	Test channel:	Highest
Test mode:		Temperature:	25°C
		Relative Humidity:	56%

Note: Spurious emissions within 30-1000MHz were found more than 20dB below limit line.

Frequency (MHz)	Spurious Emission				Limit (dBm)	Result
	Polarization	Level (dBm)	Correction Factor (dB)	Spurious emissions (dBm)		
3540.00	Vertical	-62.13	23.46	-38.67	-13.00	PASS
5310.00	V	-75.49	23.77	-51.72		
7080.00	V	-86.24	23.81	-62.43		
3540.00	Horizontal	-58.67	23.46	-35.21		
5310.00	H	-68.58	23.77	-44.81		
7080.00	H	-85.11	23.81	-61.30		

Band	Band 66(16QAM, 20MHz)	Test channel:	Lowest
Test mode:		Temperature:	25°C
		Relative Humidity:	56%

Note: Spurious emissions within 30-1000MHz were found more than 20dB below limit line.

Frequency (MHz)	Spurious Emission				Limit (dBm)	Result
	Polarization	Level (dBm)	Correction Factor (dB)	Spurious emissions (dBm)		
3440.00	Vertical	-64.44	23.40	-41.04	-13.00	PASS
5160.00	V	-68.06	23.69	-44.37		
6880.00	V	-84.23	23.75	-60.48		
3440.00	Horizontal	-59.11	23.40	-35.71		
5160.00	H	-69.39	23.69	-45.70		
6880.00	H	-79.26	23.75	-55.51		

Band	Band 66(16QAM, 20MHz)	Test channel:	Middle
Test mode:		Temperature:	25°C
		Relative Humidity:	56%

Note: Spurious emissions within 30-1000MHz were found more than 20dB below limit line.

Frequency (MHz)	Spurious Emission				Limit (dBm)	Result
	Polarization	Level (dBm)	Correction Factor (dB)	Spurious emissions (dBm)		
3510.00	Vertical	-61.02	23.42	-37.60	-13.00	PASS
5265.00	V	-72.89	23.73	-49.16		
7020.00	V	-81.74	23.79	-57.95		
3510.00	Horizontal	-59.01	23.42	-35.59		
5265.00	H	-66.55	23.73	-42.82		
7020.00	H	-82.12	23.79	-58.33		

Band	Band 66(16QAM, 20MHz)	Test channel:	Highest
Test mode:		Temperature:	25°C
		Relative Humidity:	56%

Note: Spurious emissions within 30-1000MHz were found more than 20dB below limit line.

Frequency (MHz)	Spurious Emission				Limit (dBm)	Result
	Polarization	Level (dBm)	Correction Factor (dB)	Spurious emissions (dBm)		
3540.00	Vertical	-63.02	23.46	-39.56	-13.00	PASS
5310.00	V	-72.16	23.77	-48.39		
7080.00	V	-81.12	23.81	-57.31		
3540.00	Horizontal	-59.96	23.46	-36.50		
5310.00	H	-70.19	23.77	-46.42		
7080.00	H	-84.50	23.81	-60.69		

Band	Band 71(QPSK, 20MHz)	Test channel:	Lowest
Test mode:		Temperature:	25°C
		Relative Humidity:	56%

Note: Spurious emissions within 30-1000MHz were found more than 20dB below limit line.

Frequency (MHz)	Spurious Emission				Limit (dBm)	Result
	Polarization	Level (dBm)	Correction Factor (dB)	Spurious emissions (dBm)		
1346.00	Vertical	-61.70	23.40	-38.30	-13.00	PASS
2019.00	V	-68.36	23.69	-44.67		
2692.00	V	-83.50	23.75	-59.75		
1346.00	Horizontal	-61.51	23.40	-38.11		
2019.00	H	-65.66	23.69	-41.97		
2692.00	H	-80.94	23.75	-57.19		

Band	Band 71(QPSK, 20MHz)	Test channel:	Middle
Test mode:		Temperature:	25°C
		Relative Humidity:	56%

Note: Spurious emissions within 30-1000MHz were found more than 20dB below limit line.

Frequency (MHz)	Spurious Emission				Limit (dBm)	Result
	Polarization	Level (dBm)	Correction Factor (dB)	Spurious emissions (dBm)		
1366.00	Vertical	-63.11	23.42	-39.69	-13.00	PASS
2049.00	V	-74.40	23.73	-50.67		
2732.00	V	-80.77	23.79	-56.98		
1366.00	Horizontal	-60.05	23.42	-36.63		
2049.00	H	-67.62	23.73	-43.89		
2732.00	H	-81.01	23.79	-57.22		

Band	Band 71(QPSK, 20MHz)	Test channel:	Highest
Test mode:		Temperature:	25°C
		Relative Humidity:	56%

Note: Spurious emissions within 30-1000MHz were found more than 20dB below limit line.

Frequency (MHz)	Spurious Emission				Limit (dBm)	Result
	Polarization	Level (dBm)	Correction Factor (dB)	Spurious emissions (dBm)		
1376.00	Vertical	-63.54	23.46	-40.08	-13.00	PASS
2064.00	V	-74.01	23.77	-50.24		
2752.00	V	-84.28	23.81	-60.47		
1376.00	Horizontal	-60.52	23.46	-37.06		
2064.00	H	-70.10	23.77	-46.33		
2752.00	H	-83.83	23.81	-60.02		

Band	Band 71(16QAM, 20MHz)	Test channel:	Lowest
Test mode:		Temperature:	25°C
		Relative Humidity:	56%

Note: Spurious emissions within 30-1000MHz were found more than 20dB below limit line.

Frequency (MHz)	Spurious Emission				Limit (dBm)	Result
	Polarization	Level (dBm)	Correction Factor (dB)	Spurious emissions (dBm)		
1346.00	Vertical	-61.83	23.40	-38.43	-13.00	PASS
2019.00	V	-66.01	23.69	-42.32		
2692.00	V	-83.42	23.75	-59.67		
1346.00	Horizontal	-60.18	23.40	-36.78		
2019.00	H	-67.90	23.69	-44.21		
2692.00	H	-79.35	23.75	-55.60		

Band	Band 71(16QAM, 20MHz)	Test channel:	Middle
Test mode:		Temperature:	25°C
		Relative Humidity:	56%

Note: Spurious emissions within 30-1000MHz were found more than 20dB below limit line.

Frequency (MHz)	Spurious Emission				Limit (dBm)	Result
	Polarization	Level (dBm)	Correction Factor (dB)	Spurious emissions (dBm)		
1366.00	Vertical	-61.02	23.42	-37.60	-13.00	PASS
2049.00	V	-71.14	23.73	-47.41		
2732.00	V	-79.27	23.79	-55.48		
1366.00	Horizontal	-59.66	23.42	-36.24		
2049.00	H	-69.60	23.73	-45.87		
2732.00	H	-82.39	23.79	-58.60		

Band	Band 71(16QAM, 20MHz)	Test channel:	Highest
Test mode:		Temperature:	25°C
		Relative Humidity:	56%

Note: Spurious emissions within 30-1000MHz were found more than 20dB below limit line.

Frequency (MHz)	Spurious Emission				Limit (dBm)	Result
	Polarization	Level (dBm)	Correction Factor (dB)	Spurious emissions (dBm)		
1376.00	Vertical	-64.40	23.46	-40.94	-13.00	PASS
2064.00	V	-71.12	23.77	-47.35		
2752.00	V	-80.73	23.81	-56.92		
1376.00	Horizontal	-60.58	23.46	-37.12		
2064.00	H	-69.12	23.77	-45.35		
2752.00	H	-83.26	23.81	-59.45		

5.6. Frequency Stability Measurement

5.6.1. Test Specification

Test Requirement:	FCC part 27.54, FCC part 22.355, 24.235
Test Method:	FCC Part 2.1055
Limit:	±2.5 ppm
Test Setup:	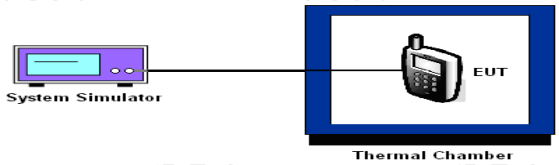
Test Procedure:	**Test Procedures for Temperature Variation** 1. The testing follows FCC KDB 971168 D01v03 Section 9.0. 2. The EUT was set up in the thermal chamber and connected with the system simulator. 3. With power OFF, the temperature was decreased to -30°C and the EUT was stabilized before testing. Power was applied and the maximum change in frequency was recorded within one minute. 4. With power OFF, the temperature was raised in 10°C steps up to 50°C. The EUT was stabilized at each step for at least half an hour. Power was applied and the maximum frequency change was recorded within one minute. **Test Procedures for Voltage Variation** 1. The testing follows FCC KDB 971168 D01v03 Section 9.0. 2. The EUT was placed in a temperature chamber at 25±5° C and connected with the system simulator. 3. The power supply voltage to the EUT was varied from BEP to 115% of the nominal value measured at the input to the EUT. 4. The variation in frequency was measured for the worst case. 5. The worst case(worst bandwidth) for frequency stability reported in the Test Data. The worst bandwidth is as follow: 1.4M is for LTE Band 2, 1.4M is for LTE Band 4, 1.4M is for LTE Band 5, 1.4M is for LTE Band 12, 5M is for LTE Band 41, 1.4M is for LTE Band 66, 5M is for LTE Band 71
Test Result:	PASS

5.6.2. Test Instruments

Equipment	Manufacturer	Model	Serial Number	Calibration Due
Wideband Radio Communication Tester	R&S	CMW500	114220	Jan. 31, 2025
Programable tempratuce and humidity chamber	JQ	JQ-2000	510101234	Jun. 28, 2024
DC power supply	Kingrang	KR3005K	/	Jun. 28, 2024
Combiner Box	AT890-RFB	Ascentest	/	/

Appendix B: Photographs of Test Setup

Refer to the test report No. TCT240509E032

Appendix C: Photographs of EUT

Refer to the test report No. TCT240509E032

Test Data for Appendix Refer to Appendix For LTE Band 2, Appendix For LTE Band 4, Appendix For LTE Band 5, Appendix For LTE Band 12, Appendix For LTE Band 41, Appendix For LTE Band 66 and Appendix For LTE Band 71

********END OF REPORT********