Shenzhen Yolanda Technology Co., Ltd.

# SPECIFICATIONS FOR APPROVAL

**Customer Name:** Shenzhen Yolanda Technology Co., Ltd

**Product Name:** BT antenna

**Product Model:** C2100C10

**Part Number:**

**Write By :** 邹丛

**Issued Date:** 2023-03-27

**CUSTOMER**

| ENGINEER R&D DEPT | BUSSINESS DEPT | APPROVED BY |
|---|---|---|
| | | |

**SOUTHSTAR**

| R & D D E P T | ENGINEER R&D DEPT | APPROVAL |
|---|---|---|
| | | |

.

Shenzhen Yolanda Technology Co., Ltd.

# The basic parameters：

| A. Electrical Characteristics | |
|---|---|
| **Frequency** | **2400 MHz ~2500 MHz** |
| **VSWR** | **< 2** |
| **Efficiency** | **>40%50** |
| **Impedance** | **Ohm** |
| **Polarization** | **Linear** |
| **Gain** | **1.7dbi** |
| B. Material & Mechanical Characteristics | |
| **Material of Radiator** | **PCB** **black** |
| **Cable Type** | 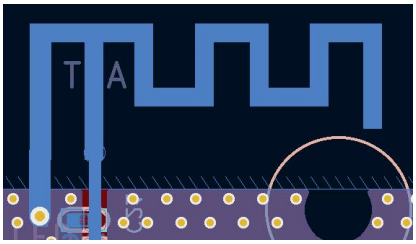 |
| **Connector Type** | |
| **Dimension** | |
| C. Environmental | |
| **Operation Temperature** | **-10 ˚C ~ + 50 ˚C** |
| **Storage Temperature** | **- 30 ˚C ~ + 85 ˚C** |

# Test Equipment & Conditions

## 1. Network Analyzers :

Agilent E5071C

## 2. 3D Chamber Test System

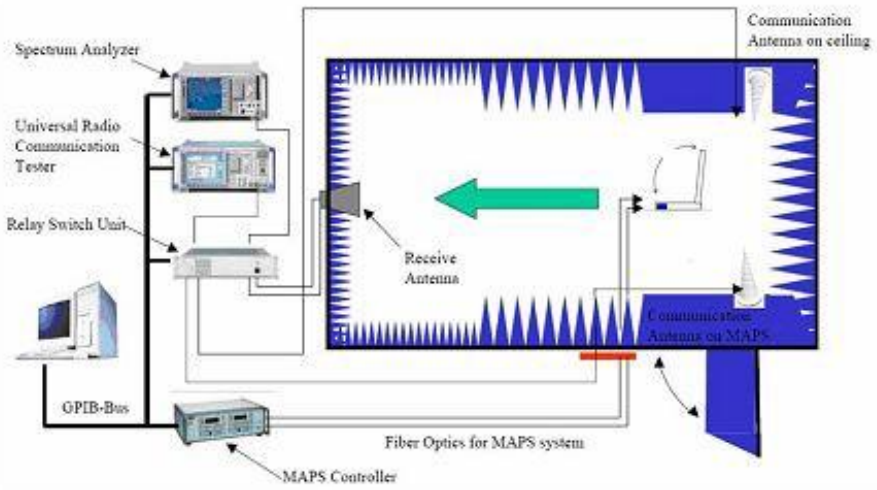


(Testing by 3D anechoic chamber)

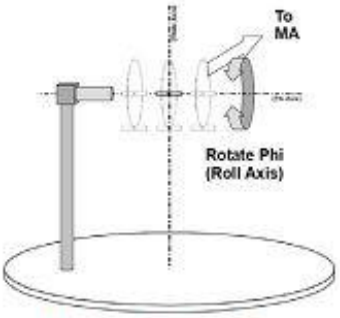


Phi axis test

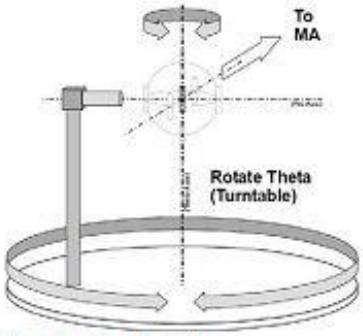


Theta axis test

## 3.Antenna Impedance: S11 （parameter）

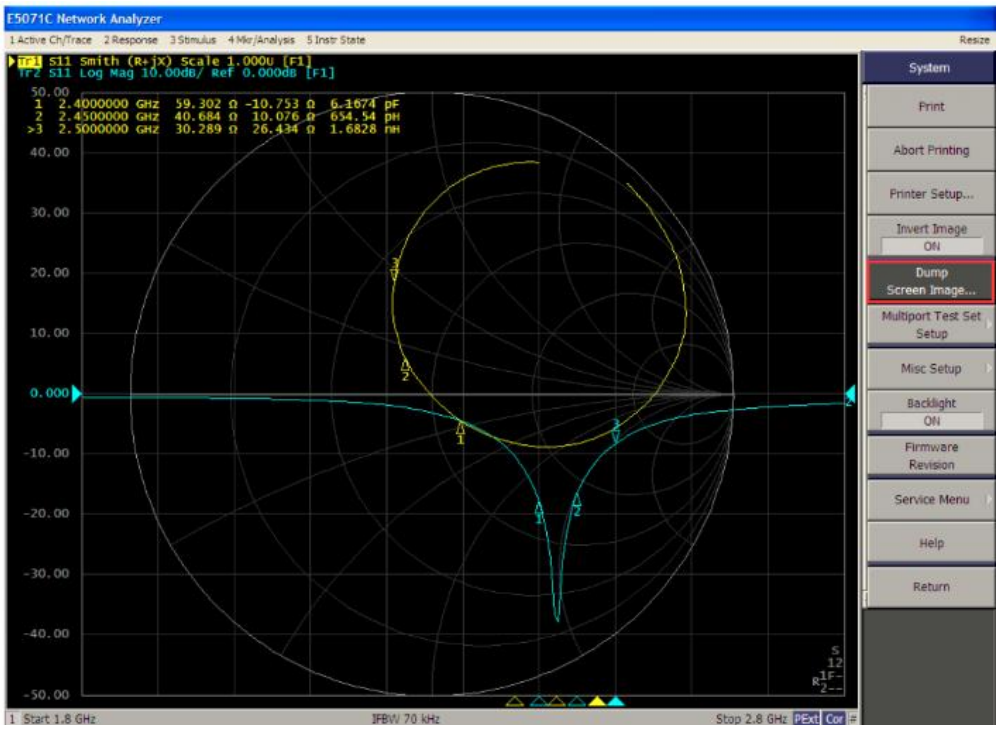


## 4. TotalEfficiency-2.4G:

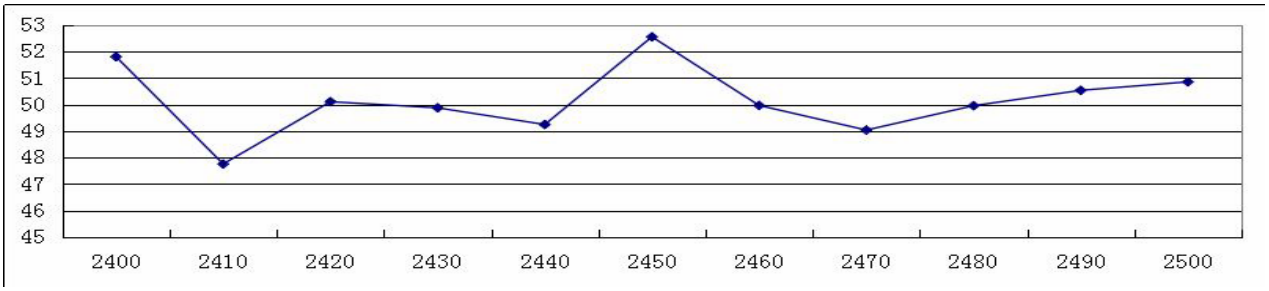


## 5. GAIN-2.4G:

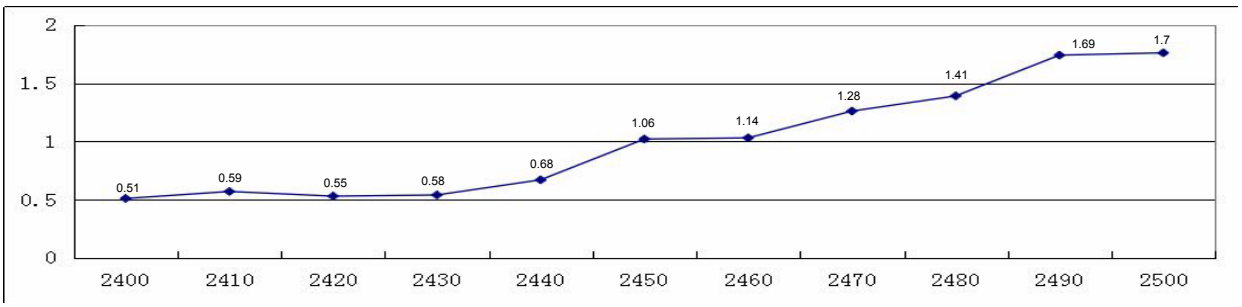

## 6. 01 directional diagram （xy plane，Z＝0）

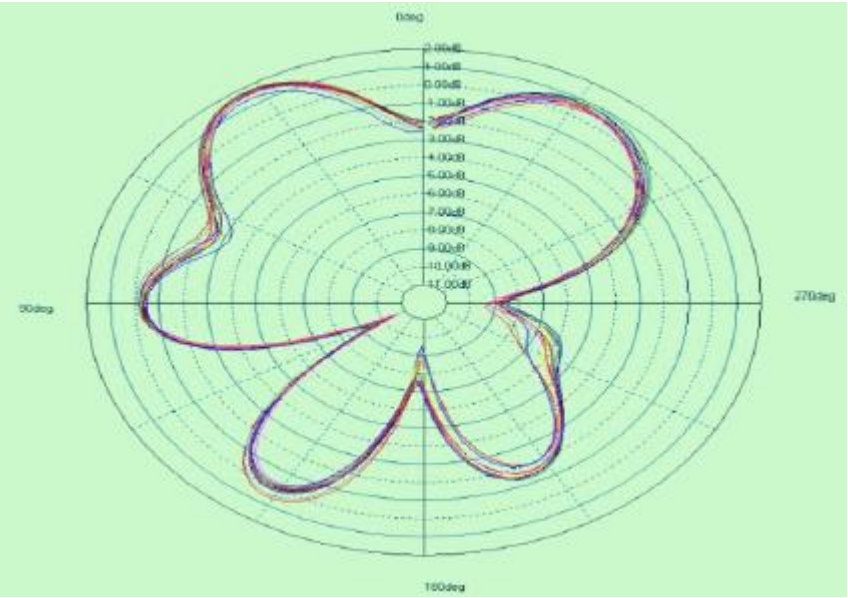

Max: 2
Min:-11
Scale:1/div

## 6.02 directional diagram（xy plane， Y=0）

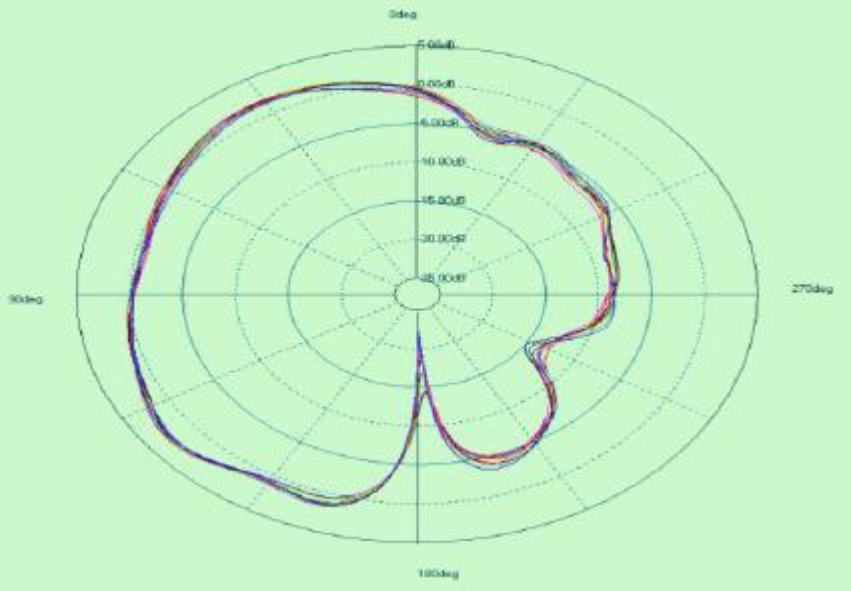

Max: 5
Min:-25
Scale:5/div

## 6.03 directional diagram( YZ plane, X=0 )

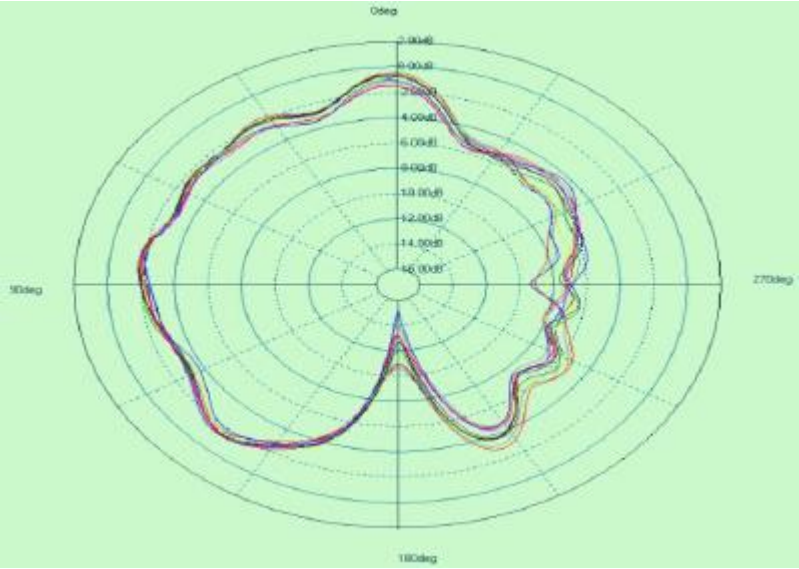


Max: 2
Min:-16
Scale:2/div

## 6.03 Apple Chart

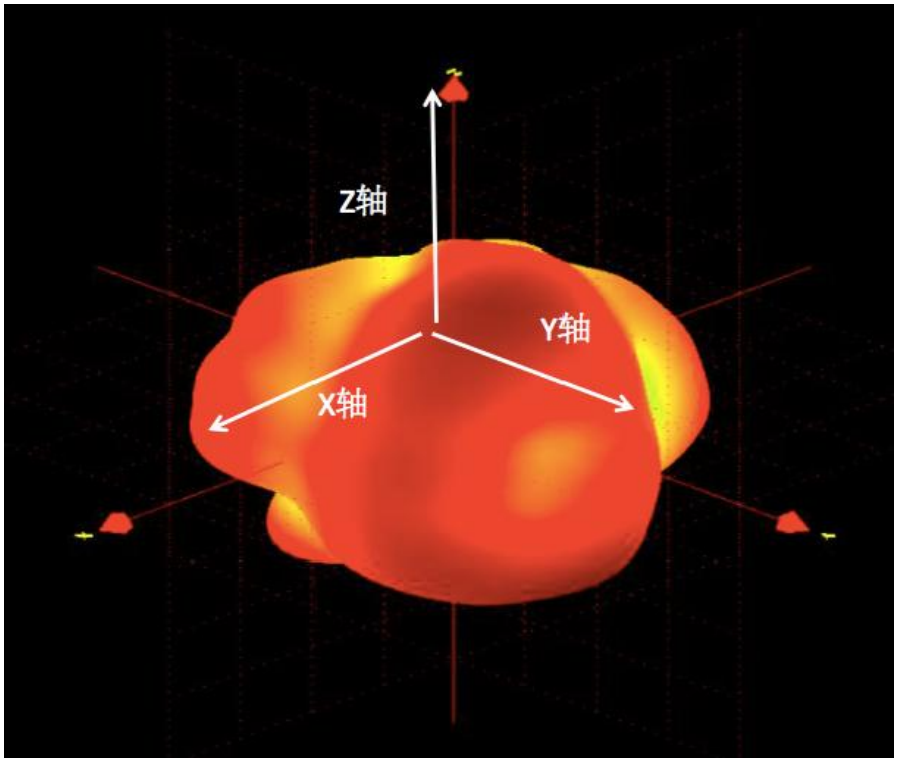
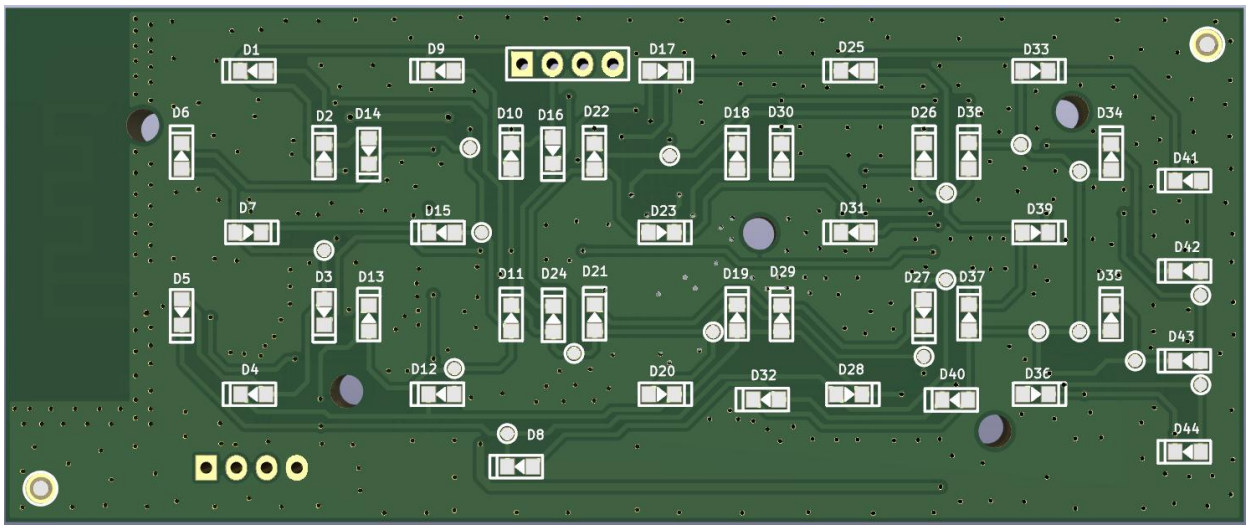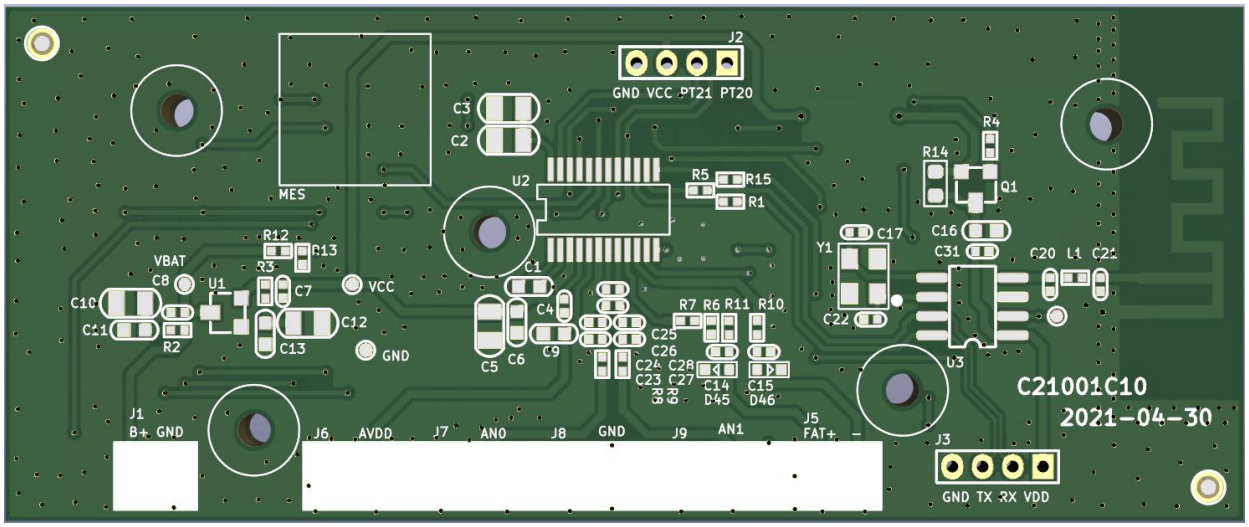
## 7. Installation method