2023-05-17　品番：主板安装说明书　印刷：4C(CMYK)　材料：157g双铜　表面处理：正反哑油　成型尺寸：76*122mm

1) Overview

Congratulations on your purchase of **HACKBOARD™** HB2 Setting a new standard for Single Board Computers (SBCs) around the world. Developed by Quantum Engineering it's an amalgamation of 30+ years of combined experience

HB2 provides speed, reliability and a digital 4K multimedia experience that is unmatched. The hardware platform comes either with Linux Debian as standard or **Microsoft Windows 11 Pro**

7

With the addition of a 40-Pin GPIO **HB** provides infinite customisation and a full range of additional connectivity through the use of Python.

2) Key Features

Processor	Intel Celeron N4020
	64 - Bit Dual Core Processor - speed up to 2.8 GHz
Memory	4GB DDR4 RAM
Storage	M.2 A - M.2 SATA NGFFm 64 GB eMMC
	M.2 B - M.2 SATA NGFFm
Connectivity	Intel Dual Band Wireless - AC9560 TBA
	a) Delivers speeds up to 1.73Mbps Dual Mode
	b) Bluetooth 5.1
SIM CARD	Standard SIM Card adaptor
	4G Wireless Module - Optional - Regional SIM card required
	LTE(FDD-TDD)/WCDMA/TD-SCDMA/GSM/GPRS/EDGE TriBand
	5G Wireless Module - Optional - Regional SIM Card required
	LTE(FDD-TDD-ENDC/SA)/3GPPR15/QPSK/SA/NSA
USB C	Functions limited to the following :-
	Output to HB Screens power supply and mobile phone charge 5V-3A
	LAN using correct supported interface
	Audio, using correct interface
	Mouse and Keyboard
	Note HB USBC will not accept powering to the main board
USB 3.0	3 off USB 3.0

8

USB 2.0	On board - 5 Pin connection port
GPIO	40 Pin GPIO FM Socket (IO refer to figure 2)
Video & Sound	HDMI 1.4 (4K)
	Max Resolution 4092x2160@30Hz
Audio	Digital Audio supplied through BT / USB C & 3 with commercially available adaptor and headsets
Speaker	Connection 5 Pin
Multimedia	Processor Graphics Intel HD Graphics 600
	Graphics Video Max Memory 8GB
	Graphics base Frequency 200 MHz
	Graphics burst frequency 650 MHz
	Direct X 12
	Open GL 4.4
	Intel Quick Sync Video
eDP	Embedded display port 11.6"-15.6" (2160x1440)
Touch	Touch Screen interface (USB 2.0) TBA
Thermal IC control	Embedded thermal software control
Heatsink	Aluminium Anodised Black - Fitted with gasket - Optional
Fan	2 Pin fan connection 5v 0.2-0.25a
Software Optional	Windows 11 Pro
	Python for Windows 11
	Linux Debian
Input Power	12V 3A (5.5 x 2.1 mm Diameter Jack Socket)
Battery	On board 10 Pin internal battery supply port
Other Battery	Power cell to provide memory backup - up to
	18 Months (PMIC) Alkaline 3v CR927 type
Power Button	Power button ON/OFF/STANDBY plus status indication 2 Colour LED

9

Environment	0 - 50 C		
Compliance	Certified	FCC	No 2BAIC-N4P5000
		CE	

4) Board Layout

Critical components - General Assembly (GA)

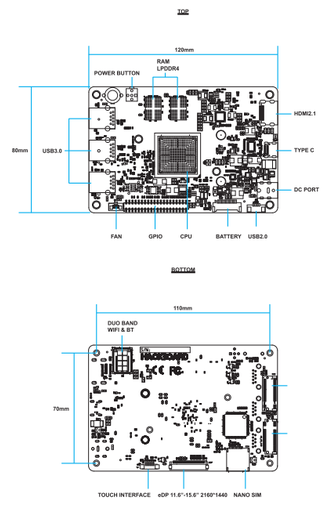

10

5) GPIO Configuration

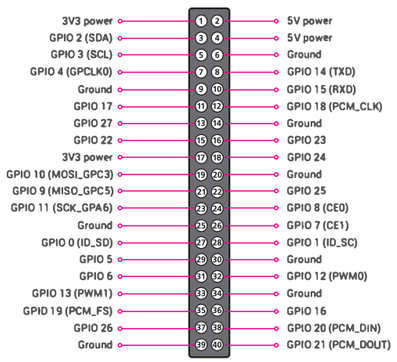

Figure 3

GPIO Male ports

3

6) Use of Product

HACKBOARD Single Board Computers are not designed, intended or authorised for use with life support, life sustaining, nuclear, or other applications in which the failure of such products could reasonably be expected to result in personal injury, loss of life or catastrophic property damage.

7) Warnings

• This product should only be connected to an external power supply rated at 12V/3A DC. Any external power supply used with HACKBOARD shall comply with relevant regulations and standards applicable in the country of intended use.

• This product should be operated in a well-ventilated environment and, if used inside an approved case, the case should not be covered.

• This product should be placed on a stable, flat, non-conductive surface in use and should not be contacted by conductive items.

• The connection of incompatible devices to the GPIO connection may affect compliance and result in damage to the unit and invalidate the warranty.

• All peripherals used with this product should comply with relevant standards for the country of use and be marked accordingly to ensure that safety and performance requirements are met. These articles include but are not limited to keyboards, monitors and mice when used in conjunction with HACKBOARD.

• Where peripherals are connected that do not include the cable or connector, the cable or connector must offer adequate insulation and operation in order that the relevant performance and safety requirements are met.

8) Safety instructions

To avoid malfunction or damage to this product please observe the following:

• Do not expose to water, moisture or place on a conductive surface whilst in operation.

• Do not expose it to heat from any source and use only at normal ambient room temperatures.

• Take care whilst handling to avoid mechanical or electrical damage to the printed circuit board and connectors.

• Do not handle the printed circuit board whilst it is powered and only handle by the edges to minimise the risk of electrostatic discharge damage and exposure to heat generated from CPU, take care not to impact the board or connectors

4

9) Regulatory Compliance Information

European Union Compliance statement

Hackboard has been tested complies or exceeds all relevant provisions of the RoHS Directive 2011/65/EU and the amendment 2015/863/EU to test standard IEC 62321 and REACH EC1907/2006

In addition Hackboard has been tested and conforms with the following CE European Standards

CE - RED	Testing Standard	EN301489
		EN300328
		EN62368
CE - EMC	Testing Standard	EN55032
CE - LVD	Testing Standard	EN62368

USA Compliance Statement

Hackboard has been tested complies or exceeds all relevant provisions of Federal Communications Commission (FCC) 2BAIC-N4P5000

Hackboard has been tested and complies with part 15B of the FCC rules (FCC SDOC)

Hackboard complies with all the provisions of the Proposition 65 in the state of California

Bluetooth* Statement

Hackboard uses Bluetooth* Technology

10) Disposal and recycling

In common with all Electronic Equipment (EEE) Hackboard should be disposed of separately from household waste.

The separate collection and recycling of this product at the time of dispersal will help to conserve natural resources and ensure that it is recycled in a safe manner that protects human health and the environment

This document and all contents drawings and specifications are copyrighted and all rights reserved.

Hackboard ™ and logo's are registered trademarks of Quantum Engineering Ltd Registered in the USA, United Kingdom, European Union, India and China.

5

FCC Caution: Any changes or modifications not expressly approved by the party responsible for compliance could void the user's authority to operate this equipment.

This device complies with Part 15 of the FCC Rules. Operation is subject to the following two conditions:

(1) This device may not cause harmful interference, and

(2) this device must accept any interference received, including interference that may cause undesired operation. This equipment should be installed and operated with minimum distance 20cm between the radiator and your body.

NOTE:

This equipment has been tested and found to comply with the limits for a Class B digital device, pursuant to Part 15 of the FCC Rules.

These limits are designed to provide reasonable protection against harmful interference in a residential installation. This equipment generates, uses and can radiate radio frequency energy and, if not installed and used in accordance with the instructions, may cause harmful interference to radio communications. However, there is no guarantee that interference will not occur in a particular installation.

If this equipment does cause harmful interference to radio or television reception, which can be determined by turning the equipment off and on, the user is encouraged to try to correct the interference by one or more of the followingmeasures:

-- Reorient or relocate the receiving antenna.

-- Increase the separation between the equipment and receiver.

-- Connect the equipment into an outlet on a circuit different from that to which the receiver is connected.

-- Consult the dealer or an experienced radio/TV technician for help.

6

QUANTUM ENGINEERING LTD

HACKBOARD™

Single-board computer overview & specification

Quantum Engineering Ltd © all rights reserved

1 封面