Bluetooth Module-LF102

User Manual

VERSION:1.0

Manufacturers:Zhongshan Leadfore Lighting Technical Co., Ltd.

1.Brief Introduction

LF102 is based on Bluetooth 5.0 standard,the working frequency is 2.4GHZ, the modulation mode is GFSK.It's a led lighting control module for RGB lightings as well as CHASE lightings.It receives commands from APP and output PWM to the gate of the mosfet inorder to drive the RGB leds,It can also output command to MCU to drive the CHASE leds.

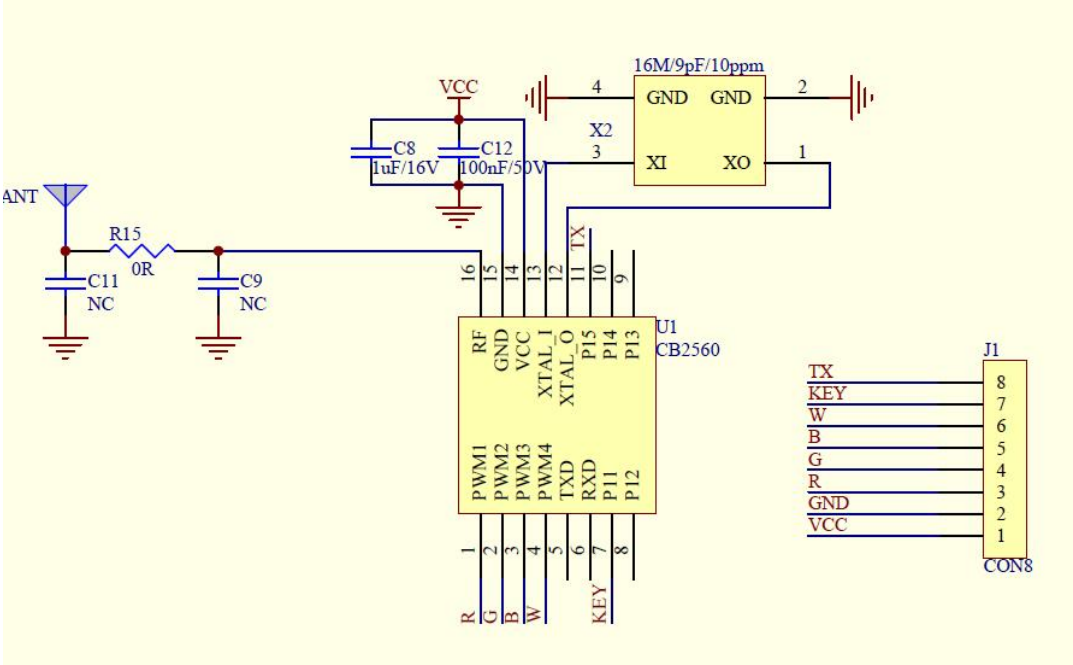

3.Module Pin definition

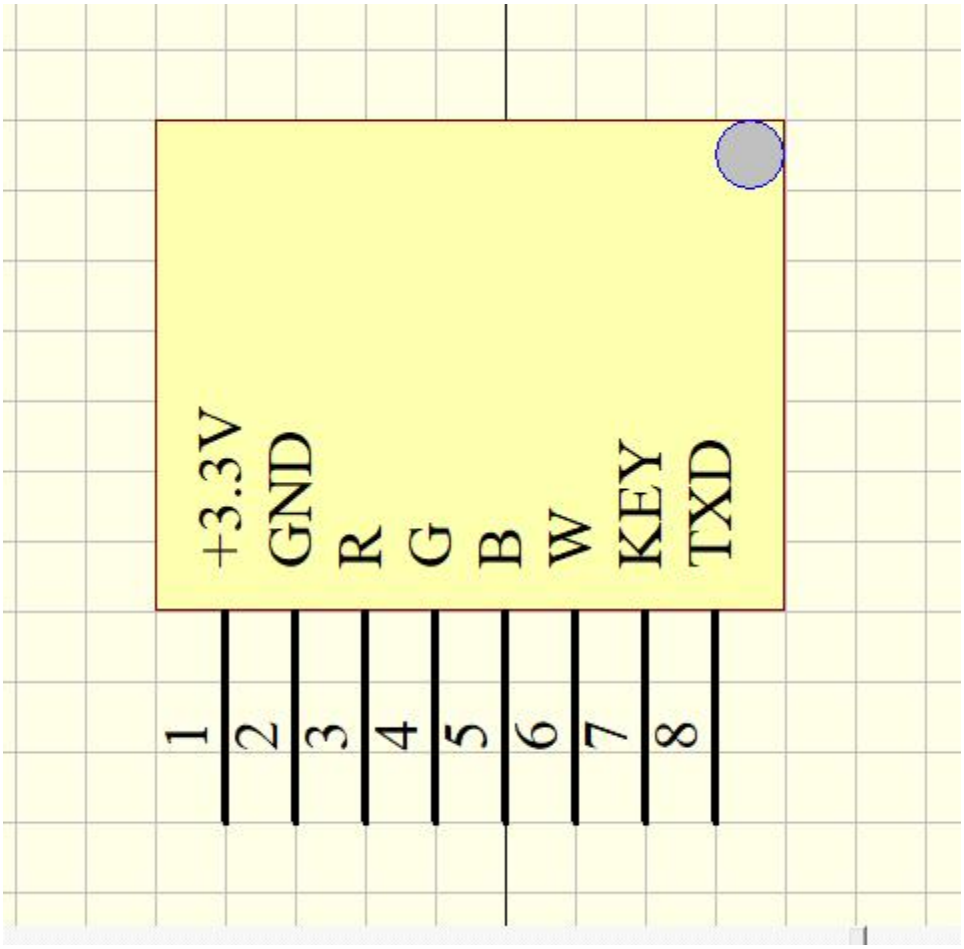

+3.3V:VCC
GND:GND
R:Output PWM for RED
G:Output PWM for GREEN
B:Output PWM for BLUE
R:Output PWM for WHITE
KEY:Optional input of key or IR
TXD:Output to MCU

4. Module Parameters

MODEL	LF102
Frequency Bank	2.4G
Transmitting Power	-1.7dBm
Receiving Sensivity	-97dbm
Working Voltage	DC3.3V
Working Current	10mA Max
Working Temperature	-40° C- 80°C
Antenna	spring antenna
Modul Size	17mm*15mm
Bluetooth Version	BLE5.0

5.APP UUID List

Service UUID	FFF0
Characteristic UUID	FFF1

6.Dimensional drawing

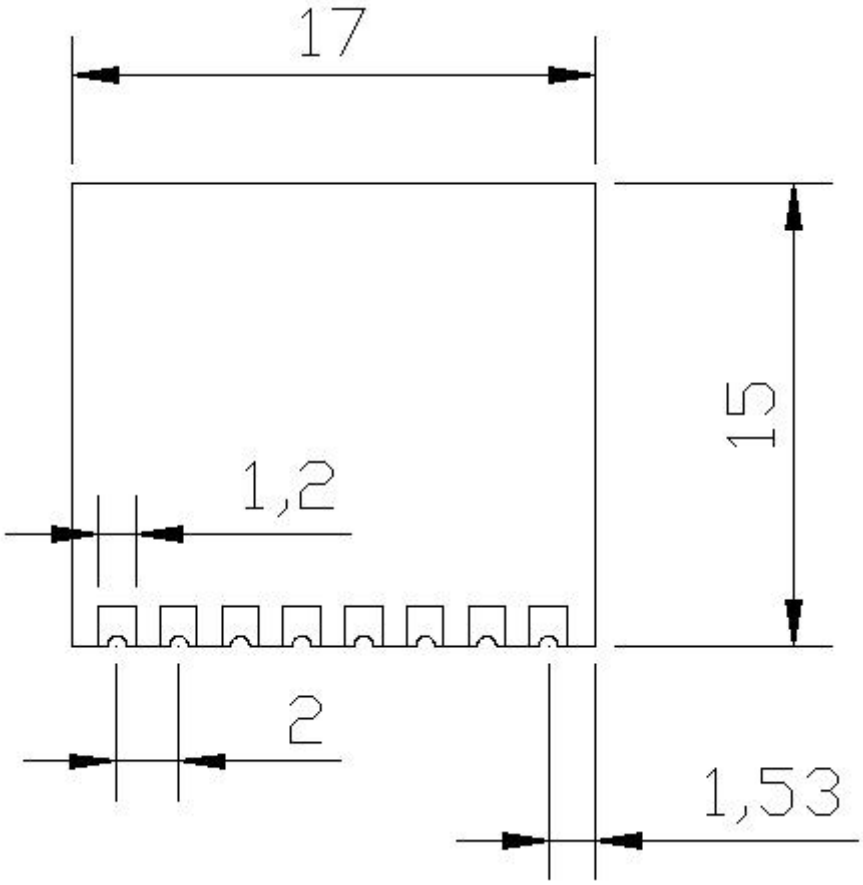

FCC Label

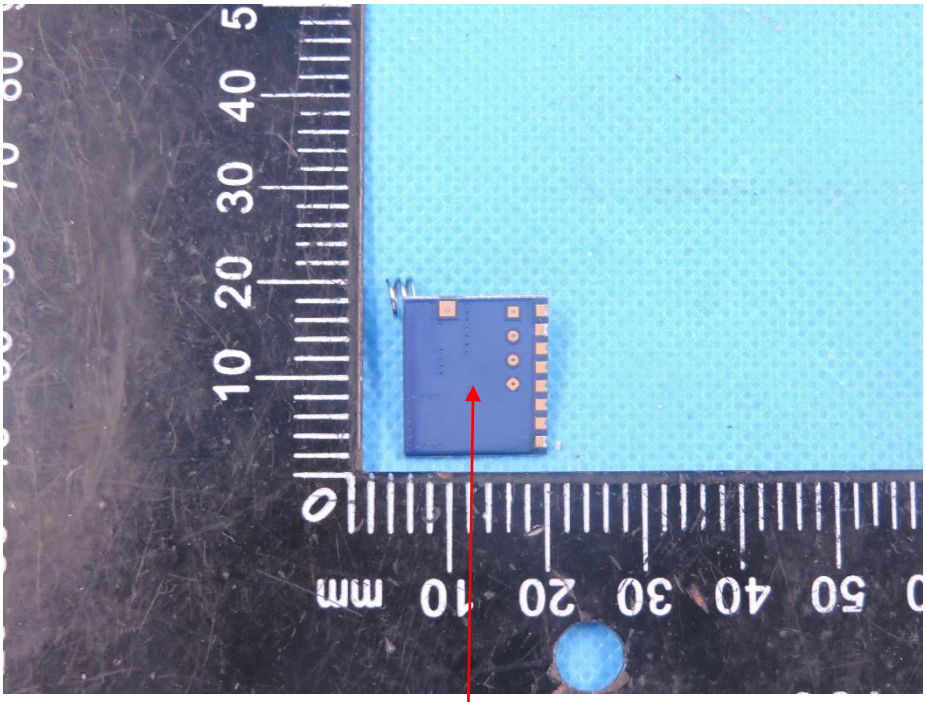

W:5mm

FCC ID: 2BAIE-LF102

L:10mm

Information that must be placed in the end user manual:

The OEM integrator has to be aware not to provide information to the end user regarding how to install or remove this RF module in the user's manual of the end product which integrates this module. The end user manual shall include all required regulatory information/warning as show in this manual.

2.2 List of applicable FCC rules
List the FCC rules that are applicable to the modular transmitter. These are the rules that specifically establish the bands of operation, the power, spurious emissions, and operating fundamental frequencies. DO NOT list compliance to unintentional-radiator rules (Part 15 Subpart B) since that is not a condition of a module grant that is extended to a host manufacturer. See also Section 2.10 below
concerning the need to notify host manufacturers that further testing is required.3
Explanation: This module meets the requirements of FCC part 15C(15.247).

2.3 Summarize the specific operational use conditions
Describe use conditions that are applicable to the modular transmitter, including for example any limits on antennas, etc. For example, if point-to-point antennas are used that require reduction in power or compensation for cable loss, then this information must be in the instructions. If the use condition limitations extend to professional users, then instructions must state that this information also extends to the host manufacturer's instruction manual. In addition, certain information may also be needed, such as peak gain per frequency band and minimum gain, specifically for master devices in 5 GHz DFS bands.
Explanation: The EUT has a spring Antenna , and the antenna use a permanently attached antenna which is not replaceable.

2.4 Limited module procedures
If a modular transmitter is approved as a "limited module," then the module manufacturer is responsible for approving the host environment that the limited module is used with. The manufacturer of a limited module must describe, both in the filing and in the installation instructions, the alternative means that the limited module manufacturer uses to verify that the host meets the necessary requirements to satisfy the module limiting conditions.
A limited module manufacturer has the flexibility to define its alternative method to address the conditions that limit the initial approval, such as: shielding, minimum signaling amplitude, buffered modulation/data inputs, or power supply regulation. The alternative method could include that the limited module manufacturer reviews detailed test data or host designs prior to giving the host manufacturer approval.
This limited module procedure is also applicable for RF exposure evaluation when it is necessary to demonstrate compliance in a specific host. The module manufacturer must state how control of the product into which the modular transmitter will be installed will be maintained such that full compliance of the product is always ensured. For additional hosts other than the specific host originally granted with a limited module, a Class II permissive change is required on the module grant to register the additional host as a specific host also approved with the module. Explanation: The Module is a limited module, Refer to the manual for detailed instructions.

2.5 Trace antenna designs

For a modular transmitter with trace antenna designs, see the guidance in Question 11 of KDB Publication 996369 D02 FAQ – Modules for Micro-Strip Antennas and traces. The integration information shall include for the TCB review the integration instructions for the following aspects: layout of trace design, parts list (BOM), antenna, connectors, and isolation requirements.

Explanation: The module not trace antenna designs, The module has a permanently fixed spring antenna, Please refer to the user manual.

2.6 RF exposure considerations

It is essential for module grantees to clearly and explicitly state the RF exposure conditions that permit a host product manufacturer to use the module. Two types of instructions are required for RF exposure information: (1) to the host product manufacturer, to define the application conditions (mobile, portable – xx cm from a person's body); and (2) additional text needed for the host product manufacturer to provide to end users in their end-product manuals. If RF exposure statements and use conditions are not provided, then the host product manufacturer is required to take responsibility of the module through a change in FCC ID (new application).

Explanation: This module complies with FCC RF radiation exposure limits set forth for an uncontrolled environment, This equipment should be installed and operated with a minimum distance of 20 centimeters between the radiator and your body." This module is designed to comply with the FCC statement, FCC ID is: 2BAIE-LF102.

2.7 Antennas

A list of antennas included in the application for certification must be provided in the instructions. For modular transmitters approved as limited modules, all applicable professional installer instructions must be included as part of the information to the host product manufacturer. The antenna list shall also identify the antenna types (monopole, PIFA, dipole, etc. (note that for example an "omni-directional antenna" is not considered to be a specific "antenna type")).

For situations where the host product manufacturer is responsible for an external connector, for example with an RF pin and antenna trace design, the integration instructions shall inform the installer that unique antenna connector must be used on the Part 15 authorized transmitters used in the host product. The module manufacturers shall provide a list of acceptable unique connectors.

Explanation: The EUT has a spring Antenna, and the antenna use a permanently attached antenna which is unique.

The following is detailed information about the antenna:

Electrical parameter	
Center frequency	2450Mhz
Antenna bandwidth	2400Mhz-2500Mhz
Antenna gain	3dBi
Standing wave ratio	<1.6
Direction of polarization	Vertical polarization
Radiation direction	omnidirectional
Input impedance	50Ω
Maximum power	10W
Other parameters	
Antenna length	6mm
Spiral diameter	4.5mm
Line diameter	0.6mm
Antenna material	Nickel plating of stainless steel
Interface specification	Welded joint
Operating temperature	-40℃~ +80℃

2.8 Label and compliance information

Grantees are responsible for the continued compliance of their modules to the FCC rules. This includes advising host product manufacturers that they need to provide a physical or e-label stating “Contains FCC ID” with their finished product. See Guidelines for Labeling and User Information for RF Devices – KDB Publication 784748.

Explanation:The host system using this module, should have label in a visible area indicated the following texts: "Contains FCC ID: 2BAIE-LF102."

2.9 Information on test modes and additional testing requirements5

Additional guidance for testing host products is given in KDB Publication 996369 D04 Module Integration Guide. Test modes should take into consideration different operational conditions for a stand-alone modular transmitter in a host, as well as for multiple simultaneously transmitting modules or other transmitters in a host product.

The grantee should provide information on how to configure test modes for host product evaluation for different operational conditions for a stand-alone modular transmitter in a host, versus with multiple, simultaneously transmitting modules or other transmitters in a host.

Grantees can increase the utility of their modular transmitters by providing special means, modes, or instructions that simulates or characterizes a connection by enabling a transmitter. This can greatly simplify a host manufacturer’s determination that a module as installed in a host complies with FCC requirements.

Explanation: Top band can increase the utility of our modular transmitters by providing instructions that simulates or characterizes a connection by enabling a transmitter.

2.10 Additional testing, Part 15 Subpart B disclaimer

The grantee should include a statement that the modular transmitter is only FCC authorized for the specific rule parts (i.e., FCC transmitter rules) listed on the grant, and that the host product manufacturer is responsible for compliance to any other FCC rules that apply to the host not covered by the modular transmitter grant of certification. If the grantee markets their product as being Part 15 Subpart B compliant (when it also contains unintentional-radiator digital circuity), then the grantee shall provide a notice stating that the final host product still requires Part 15 Subpart B compliance testing with the modular transmitter installed.

Explanation: The module without unintentional-radiator digital circuity, so the module does not require an evaluation by FCC Part 15 Subpart B. The host shoule be evaluated by the FCC Subpart B.

FCC Statement

Any Changes or modifications not expressly approved by the party responsible for compliance could void the user's authority to operate the equipment.

The modular can be installed or integrated in mobile or fix devices only. This modular cannot be installed in any portable device.

FCC Radiation Exposure Statement
This modular complies with FCC RF radiation exposure limits set forth for an uncontrolled environment. This transmitter must not be co-located or operating in conjunction with any other antenna or transmitter. This modular must be installed and operated with a minimum distance of 20 cm between the radiator and user body.

If the FCC identification number is not visible when the module is installed inside another device, then the outside of the device into which the module is installed must also display a label referring to the enclosed module. This exterior label can use wording such as the following: “Contains Transmitter Module FCC ID: 2BAIE-LF102 Or Contains FCC ID: 2BAIE-LF102”

When the module is installed inside another device, the user manual of the host must contain below warning statements;

This device complies with Part 15 of the FCC Rules. Operation is subject to the following two conditions:
(1) This device may not cause harmful interference.
(2) This device must accept any interference received, including interference that may cause undesired operation.

The devices must be installed and used in strict accordance with the manufacturer's instructions as described in the user documentation that comes with the product.

Any company of the host device which install this modular with Single modular approval should perform the test of radiated emissionand spurious emission according to FCC part 15C : 15.247 and 15.209 requirement,Only if the test result comply with FCC part 15C : 15.247 and 15.209 requirement, then the host can be sold legally.

Note: This equipment has been tested and found to comply with the limits for a Class B digital device, pursuant to part 15 of the FCC Rules. These limits are designed to provide reasonable protection against harmful interference in a residential installation. This equipment generates uses and can radiate radio frequency energy and, if not installed and used in accordance with the instructions, may cause harmful interference to radio communications. However, there is no guarantee that interference will not occur in a particular installation. If this equipment does cause harmful interference to radio or television reception, which can be determined by turning the equipment off and on, the user is encouraged to try to correct the interference by one or more of the following measures:

-Reorient or relocate the receiving antenna.
-Increase the separation between the equipment and receiver.
-Connect the equipment into an outlet on a circuit different from that to which the receiver is connected.
-Consult the dealer or an experienced radio/TV technician for help.

Installation Statement

Bluetooth module (LF102) only installed in Zhongshan Leadfore Lighting Technical Co., Ltd. for RGB magic series light control, prohibited other companies to use or apply to other applications.

RGB magic series light control board installation instructions

The Bluetooth module needs to be welded to the RGB magic series light control board in accordance with the corresponding pin position, and the controller can only be applied to the RGB magic series light. Then weld the antenna, and the antenna distance from the module cannot be more than 20mm. Finally, the shell is filled with glue, and the user cannot change the module characteristics.
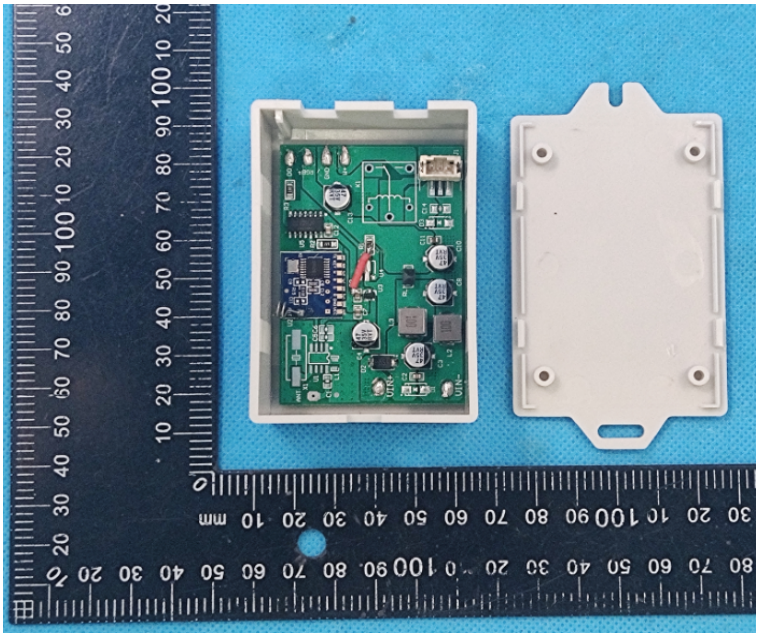
As shown in the figure: