HISINGY®

CONTROLLER TX-50

JOURNEY STARTS HERE

FLY ANYWHERE AT ANYTIME, FEEL THE THRILL
OF THE IMMERSIVE INDOOR FPV EXPERIENCE

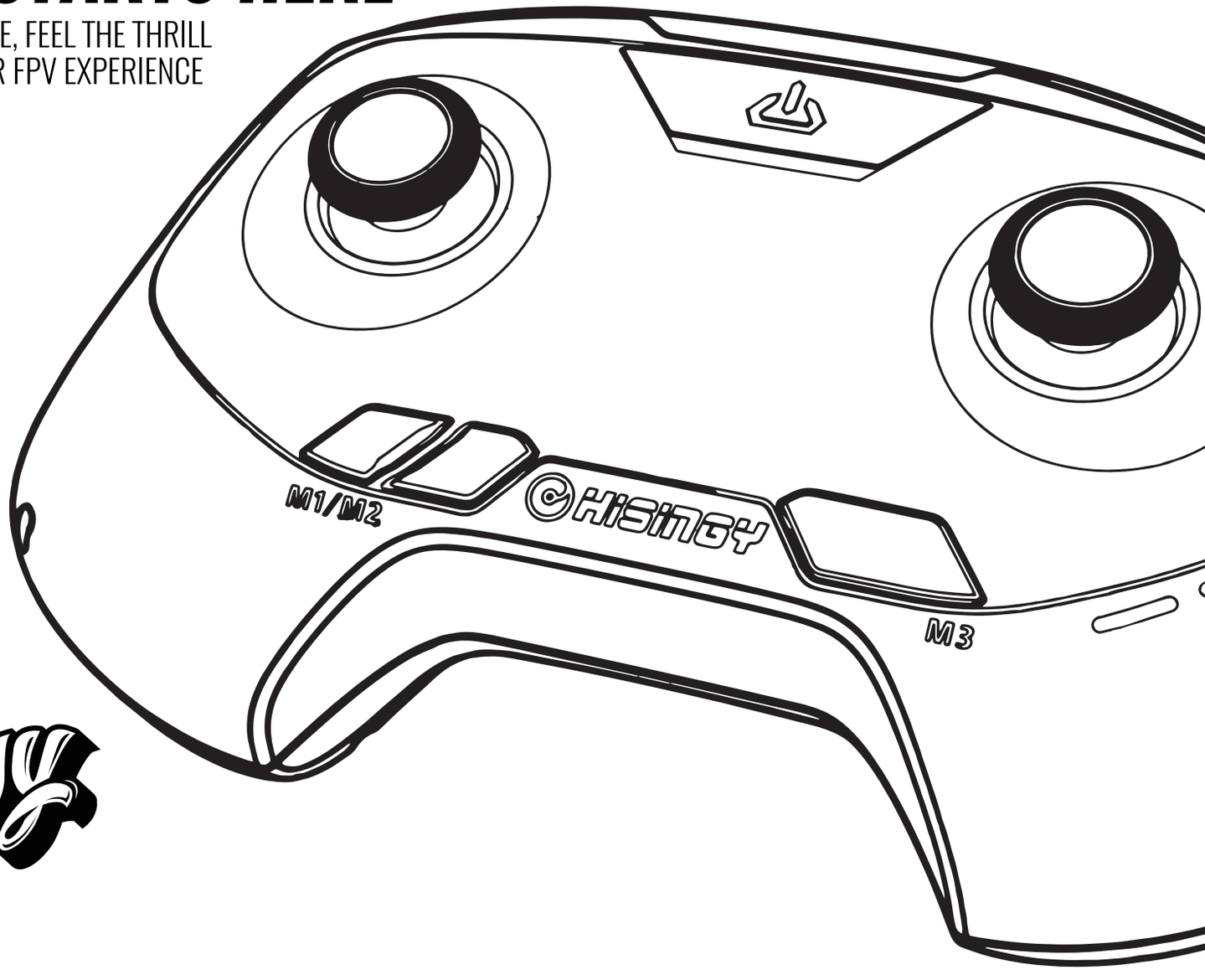

Hisingy

HISINGY.com

DESIGNED BY PROS
FOR EVERYONE

INSTRUCTION MANUAL

FPV MADE EASY
MINI DRONE

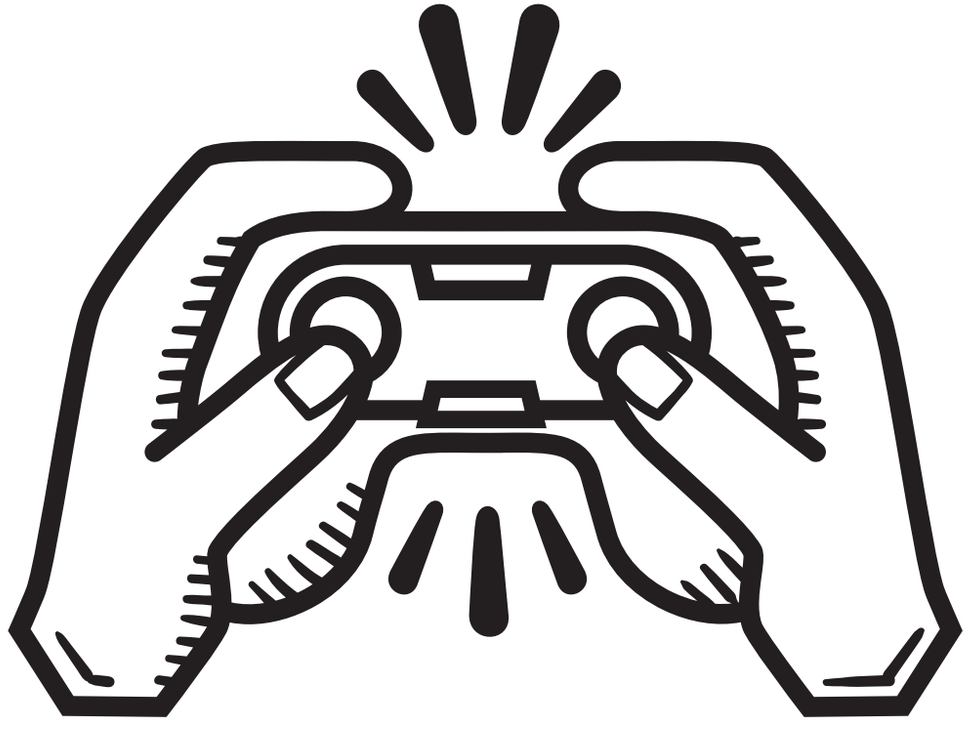

CONTROLLER

TX-50

Please read this instruction manual carefully before using this product. This instruction manual contains important information, please safekeeping.

CATALOGUE

INTRODUCTION

1. Button Description
2. Device Battery Installation 7

OPERATION GUIDE

1. Controller Functions
2. Binding
3. Flight Control 9

CONTROLLER CONNECTED TO PC 14

HISINGY APP

1. Download HISINGY APP
2. Add item 16

AFTER-SALES SERVICE REGULATIONS 18

NOTICE

All instructions, warranties and other related documents are subjected to change at the sole discretion of "HISINGY" Cockatoo & Friends Co., Ltd. For up-to-date information and other supports please visit official website www.hisingy.com.

Terminology of Importance

The following terms are used throughout the product literature to indicate various levels of potential harm when operating this product.

WARNING

Failure to follow the procedures described in the following section properly create the probability of property damage, collateral damage, and serious injury or create a high probability of superficial injury.

CAUTION

Failure to follow the procedures described in the following section properly create the probability of physical property damage and a possibility of serious injury.

NOTICE

Failure to follow the procedures described in this instruction may result in property damage but there is little chance of injury.

WARNING

Please read the ENTIRE instruction manual to familiarize with the product features before using. Failure to operate the product correctly can result in product damage, property damage and cause serious injury.

This is a sophisticated product. Please exercise cautions when operating. Common sense and basic mechanical ability are required.

Failure to use this product in a safe and responsible manner may result in damage to the product or other property.

- This product is not intended for use by children without adult supervision. Do not use incompatible components or alter this product in any way outside of the instructions provided by “HISINGY” Cockatoo & Friends Co., Ltd. This document contains detailed instructions for safety, operation and maintenance. It is essential to read and follow all the instructions and warnings in advance so as to proper operation and to avoid product damage or serious injury.

14+

Safety Precautions and Warnings

1. Always keep a safe distance in all directions around your aircraft to avoid collision or damage. This aircraft is controlled by radio signals may be subject to interference from many sources (Wi-Fi routers , cell towers , microwave, large home appliances, radio stations, etc.) that is out of your control. These interference can cause momentary control loss to the aircraft.

2. Always operate your aircraft in an indoor space away from vehicles, roads, traffic and people.

3. Always carefully follow the directions and warnings on this product and optional supporting equipment (chargers, rechargeable flight / device battery, etc.).

4. Always keep all chemicals, small parts and anything electrical (flight / device battery) out of the reach of children.

5. Always keep all non-waterproof equipment out of contact with water, moisture can damage electronic equipment.

6. The operating temperature range of the aircraft, controller, FPV headset and charger is 0℃-45℃. Operating at temperatures below or exceeding the specified temperature range could affect the flight battery and device battery, resulting in loss of performance , compromise of structural integrity and safety problems, and could cause overheating or leaking. Do not operate when the temperature exceeds 45℃.

7. Never place any portion of the aircraft in your mouth, as it could cause serious injury or even death.

8. Never operate your aircraft with low controller / FPV headset battery.

9. Always keep your aircraft in sight and under control.

10. Always move the throttle fully down or trigger the emergency cutoff function at the time of the crash.

11. Do not stare at the LED indicator light at the rear of the aircraft closely for a long period of time, as this may result in eye discomfort.

12. Always use fully charged batteries.

13. Always keep controller powered on while the aircraft is powered on.

14. Always remove batteries before disassembly and assembly.

15. Always keep moving parts (motors and propellers) clean.

16. Always remove batteries after use.

17. Never operate aircraft with damaged wiring.

18. Never touch moving parts (motors and propellers).

INTRODUCTION

1. Button Description

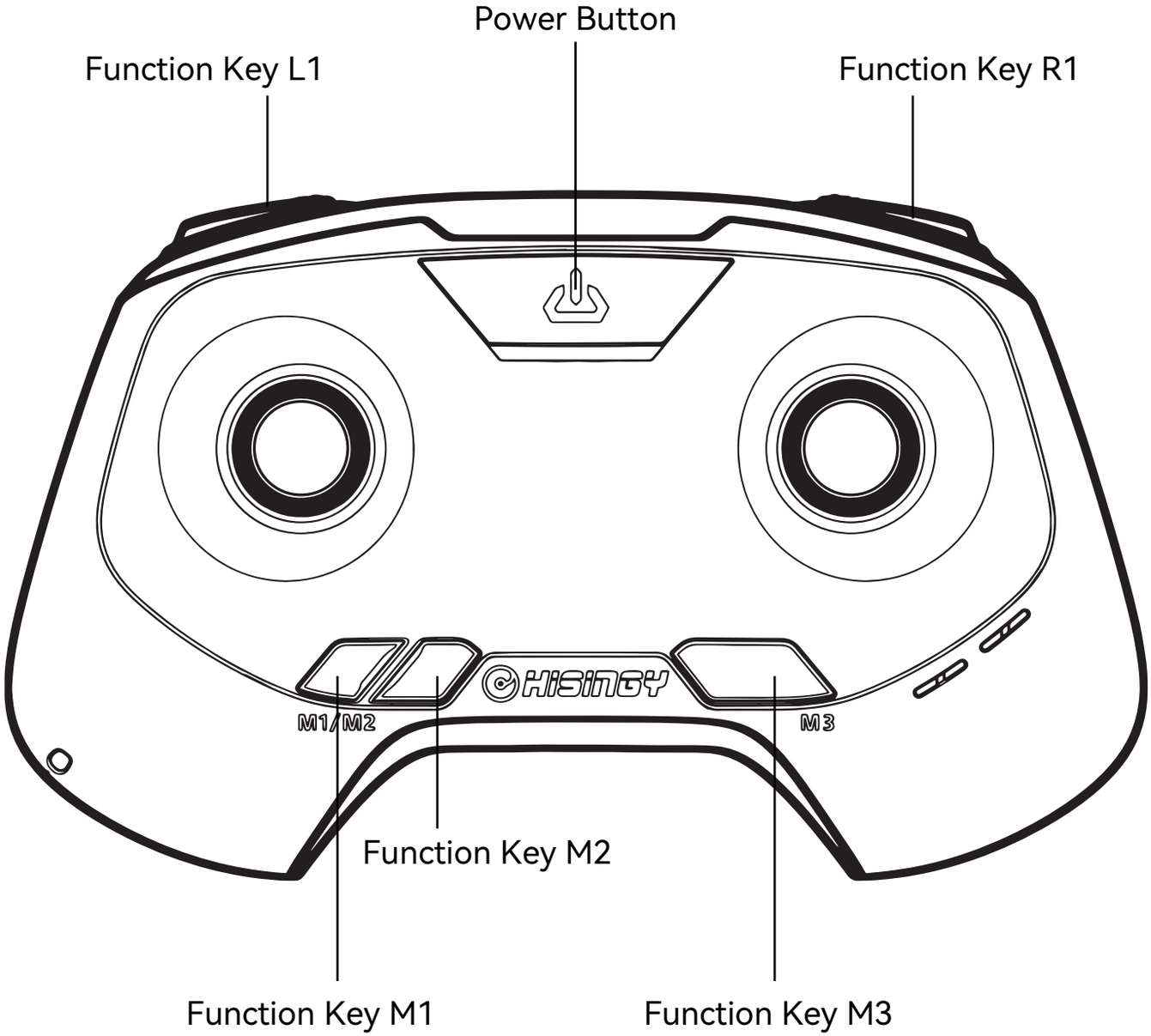

2. Device Battery Installation

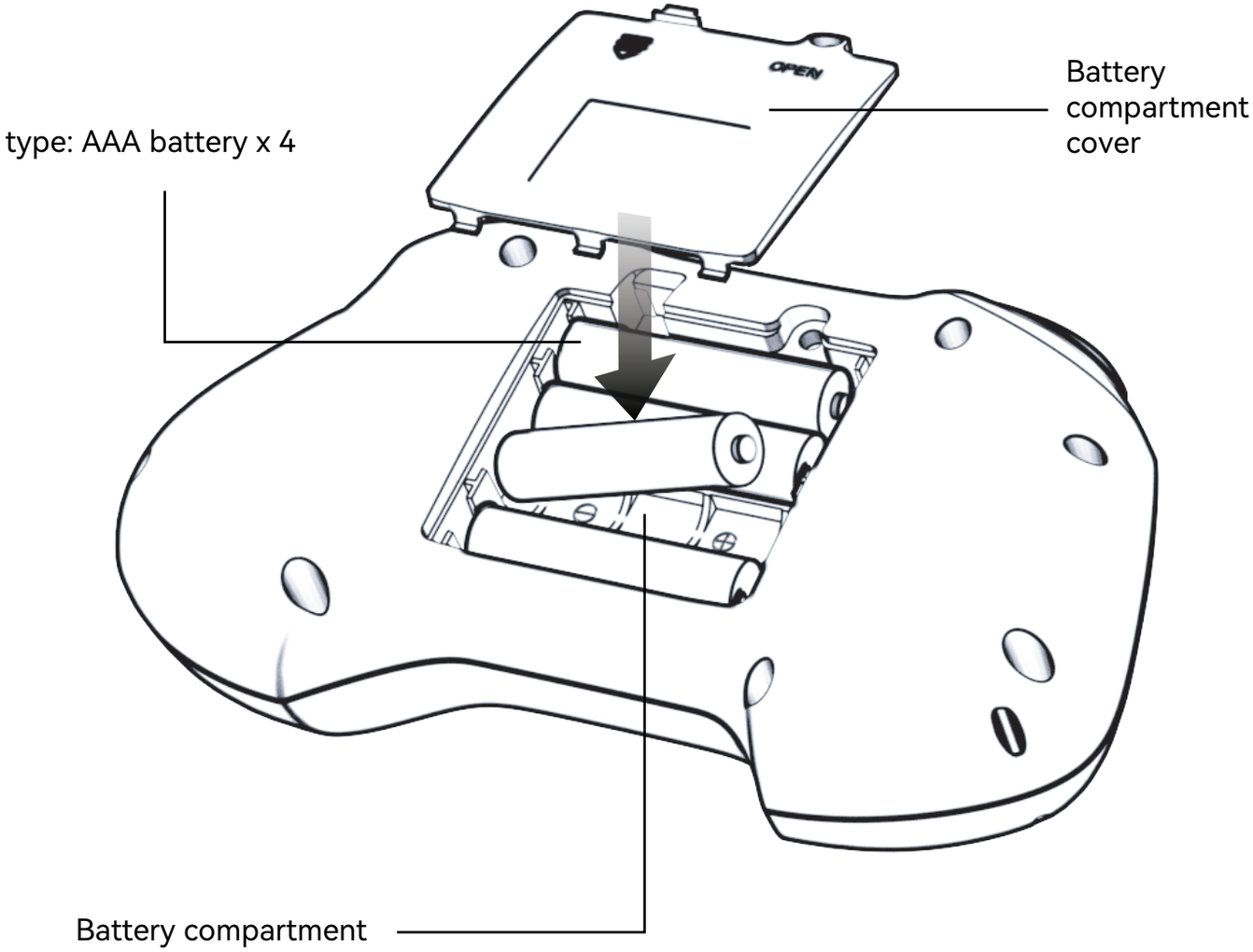

Low battery alarm

When the battery level of the controller is lower than 20%, low battery alarm will be activated.

OPERATION GUIDE

1. Controller Functions

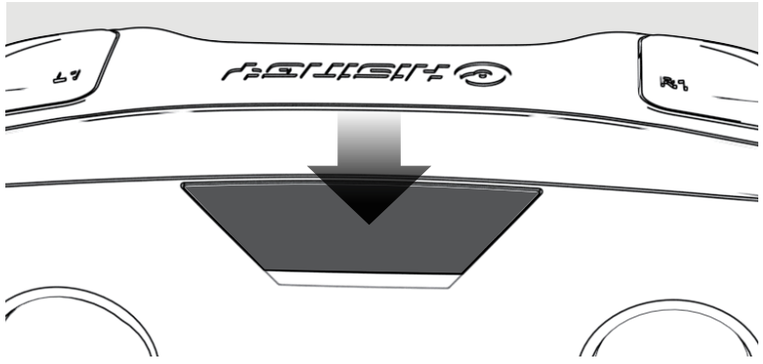

Power Button
Long press to switch controller on / off.

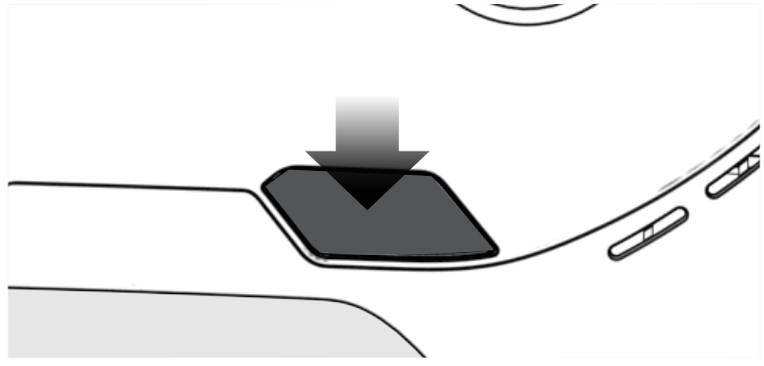

Function Key M3
Long press to start / stop the motors (arm / disarm).

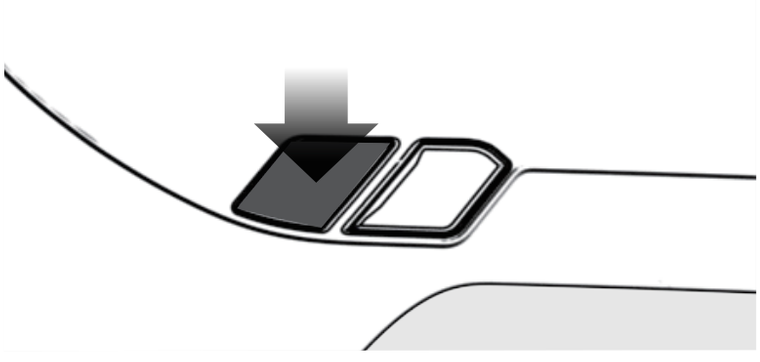

Function Key M1
Long press M1 to activate beacon mode.

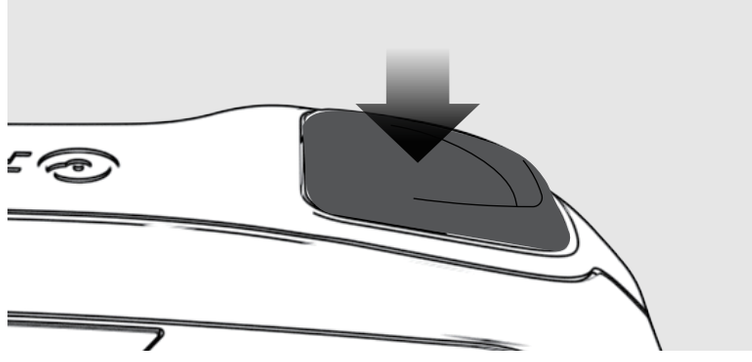

Function Key R1
Short press to switch flight mode

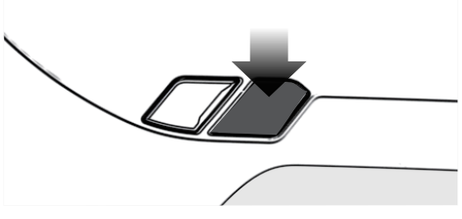

Function Key M2
Backup function button.

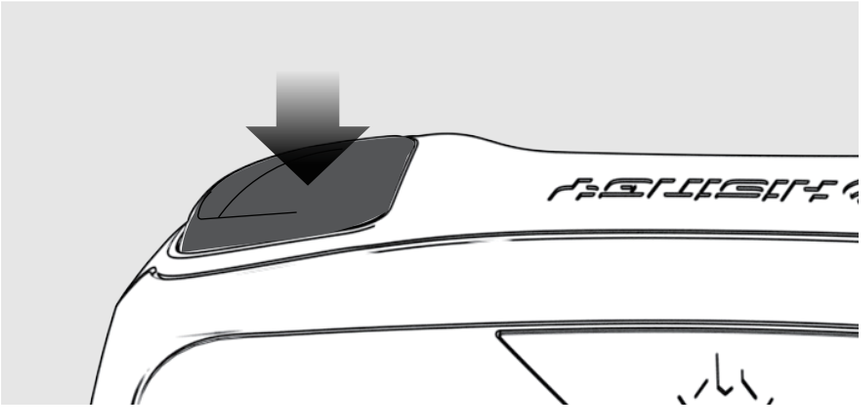

Function Key L1

Short press triggers flip.

When the aircraft reaches a height of about 2 meters above the ground, you can enter the flip mode by lightly pressing the L1' button. After entering the flip mode, the pilot can control the direction of the aircraft's roll by moving the right (directional) joystick.

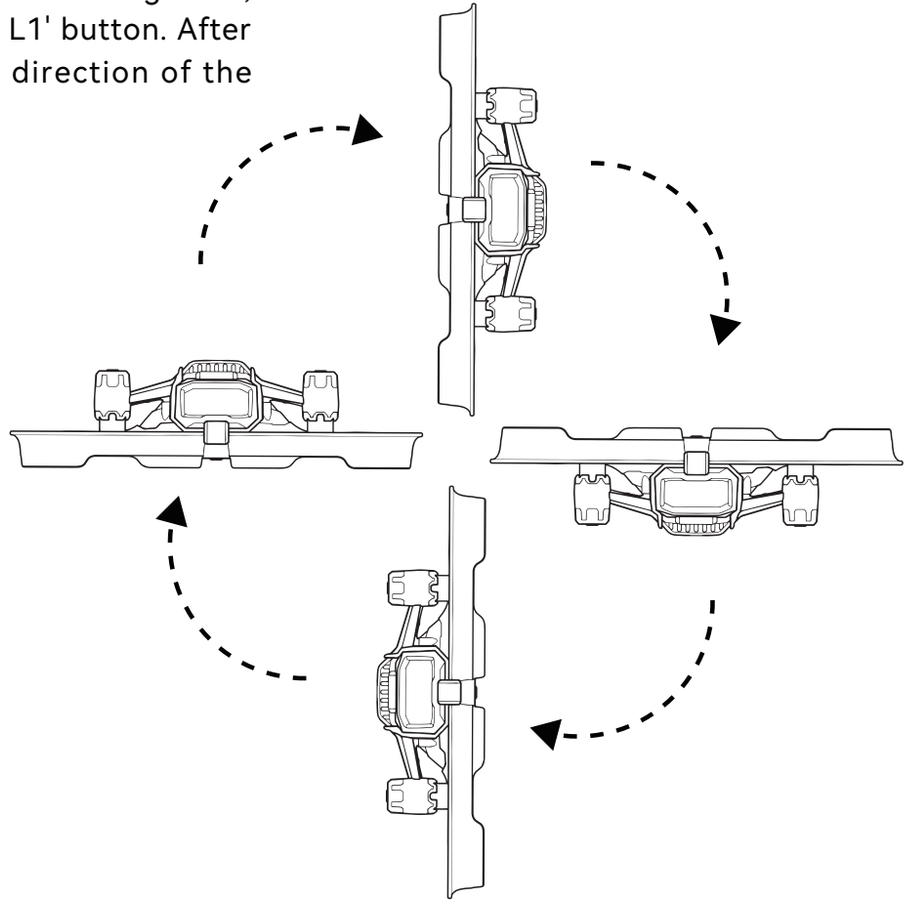

2. Binding **(The airplane+remote control kit version does not require frequency matching)**

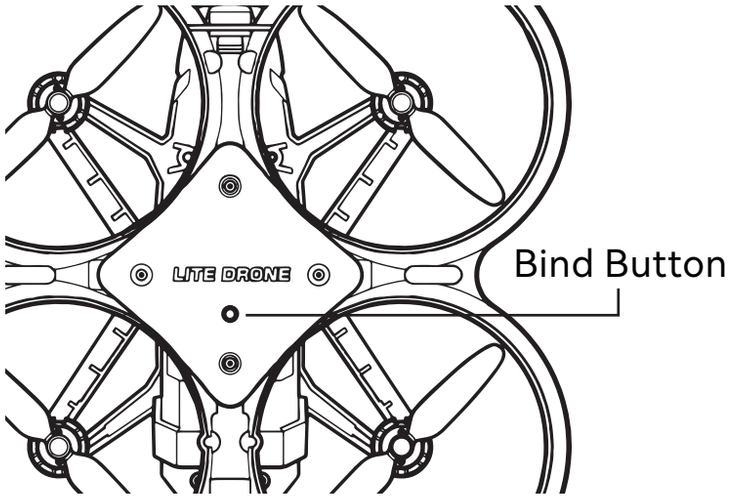

When the aircraft is powered on, **flip it to the bottom and press and hold the binding button to enter binding mode.** When the binding mode is activated, the indicator LED will quickly flash in multiple colors.

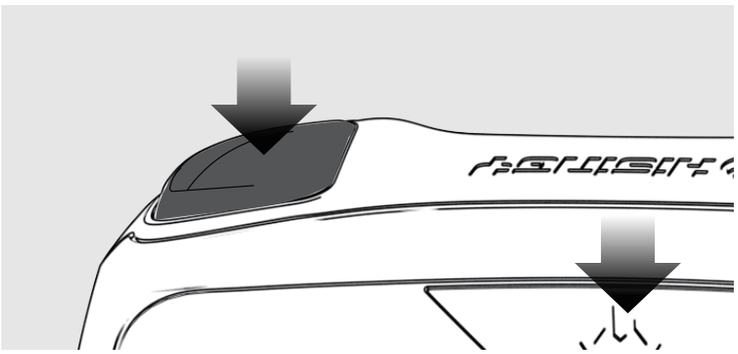

The controller must be in the off state, **hold down the function key L1 and long press the power button to activate the binding mode.** After activating the binding mode, the controller will continuously flash the indicator light.
(TX50 as an example, TX100 also operates binding)

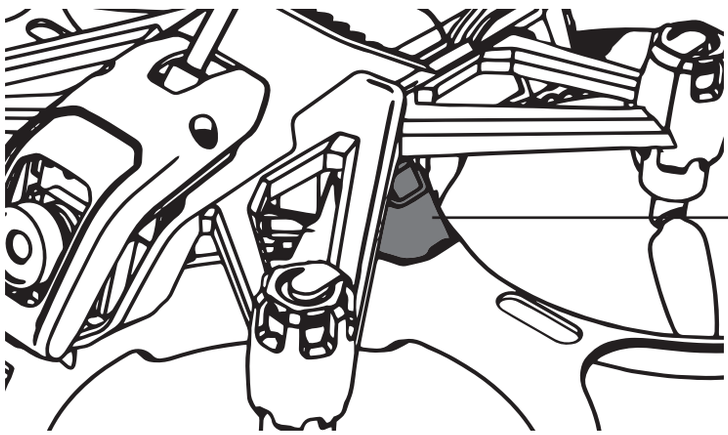

After successful binding, the LED light changes to slow breathing mode.

3. Flight Control

Throttle Up

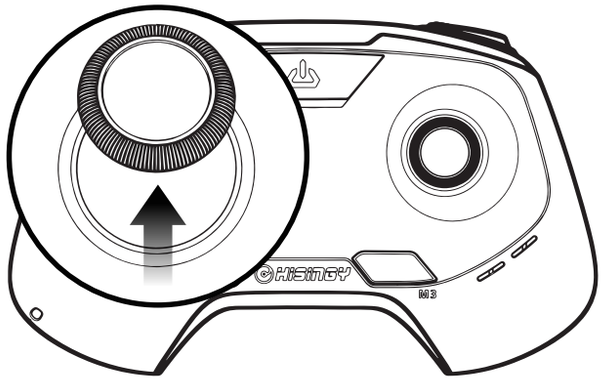

Climb

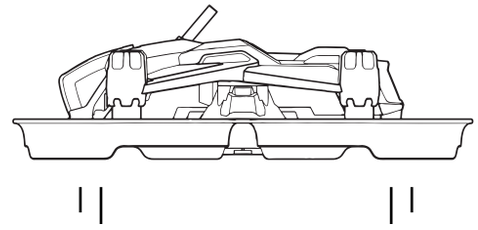

Throttle Down

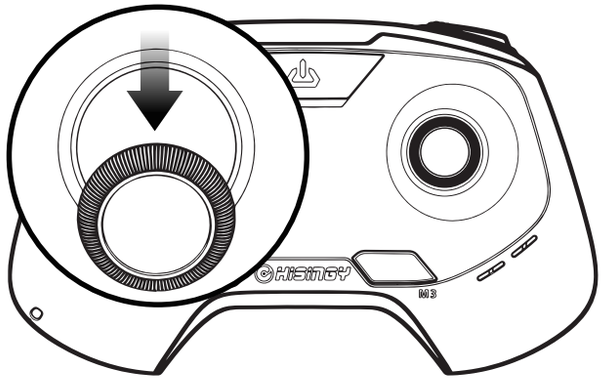

Descend

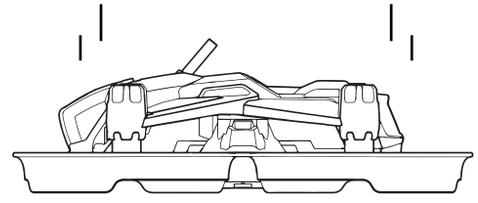

Rudder Left

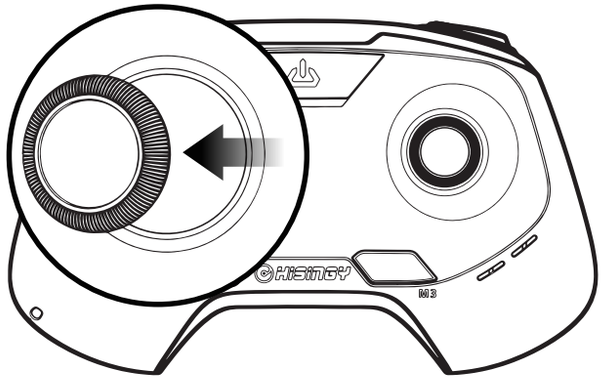

Yaw Left

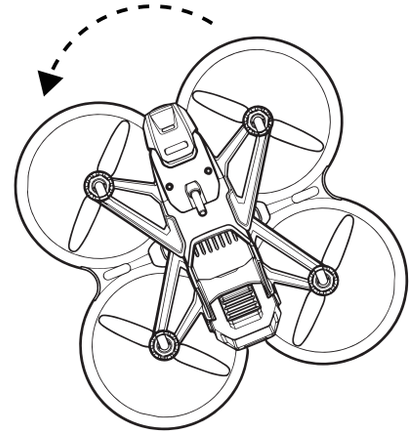

Rudder Right

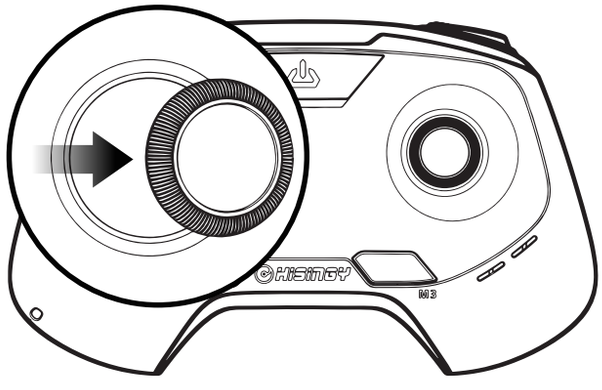

Yaw Right

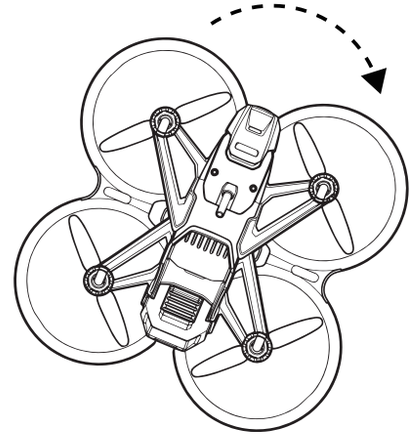

Elevator Up

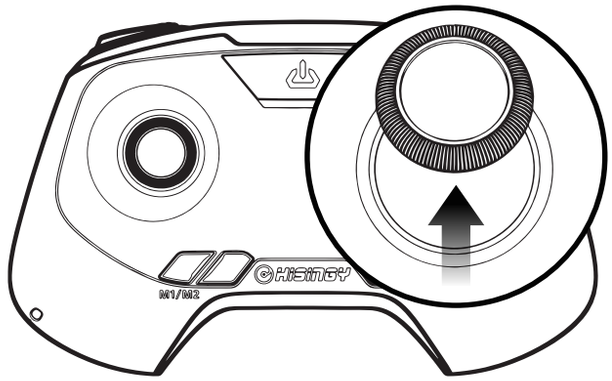

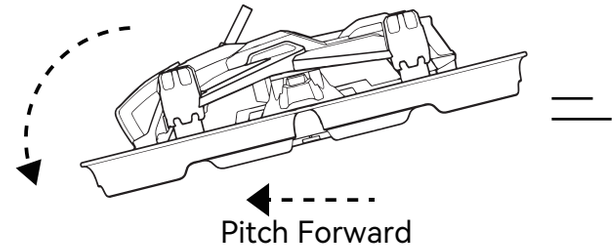

Elevator Down

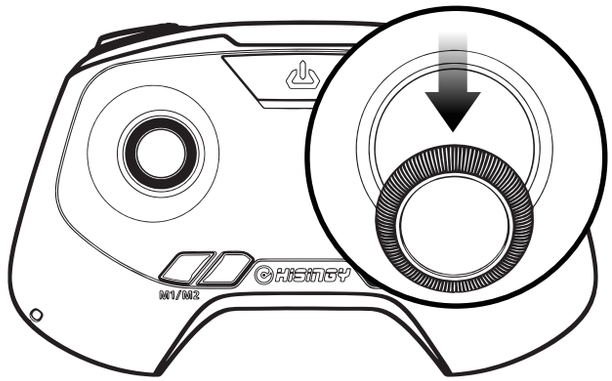

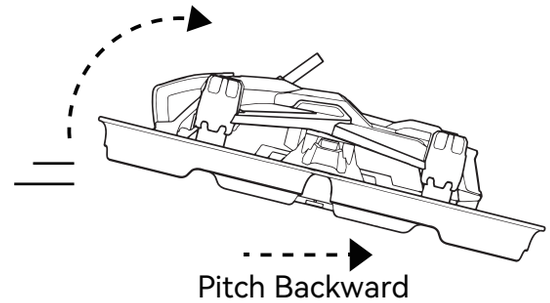

Aileron Left

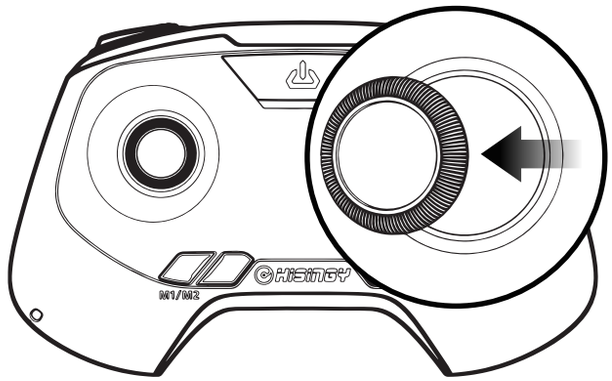

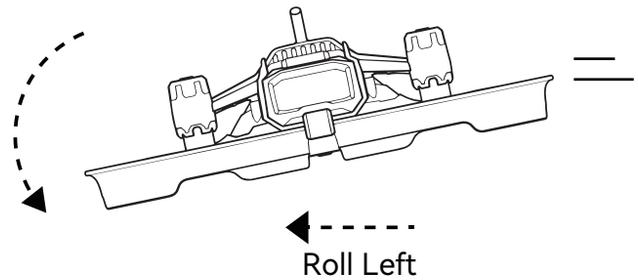

Aileron Right

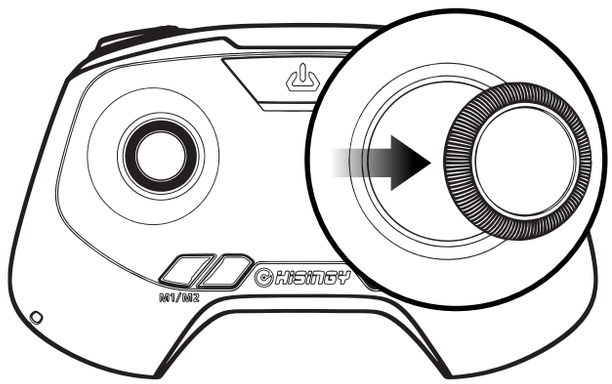

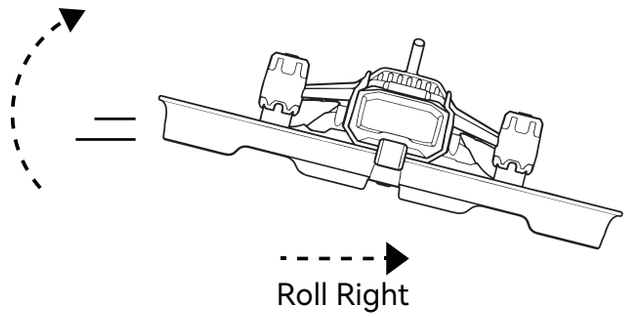

CONTROLLER CONNECTED TO PC

Improve skills with your Mini Drone in Liftoff: Micro Drones

Compatible with most emulators, STEAM games require individual purchase.

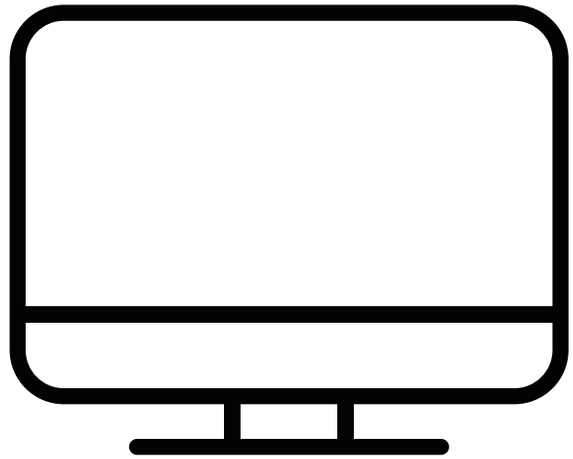

Connect to your computer as Bluetooth game controller.
Open the controller., search for Bluetooth on the computer, and find the remote control link.

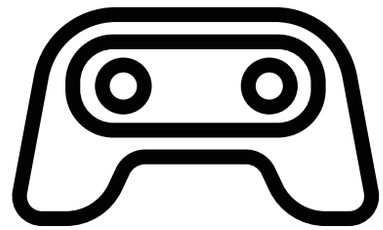

Steam

LIFTOFF
MICRO DRONES

LIFTOFF: MICRO DRONES

HISINGY APP

1. Download HISINGY APP

APP DOWNLOAD

2. Add item

Tap on the "Add Equipment" button located below the main menu bar (second icon from the left), and follow the prompts to scan the device's QR code ID to add the equipment.

You can view the device in "My Devices" under Account.

The App contains all the information related to HISINGY devices, and you can always access the electronic manual at any time.

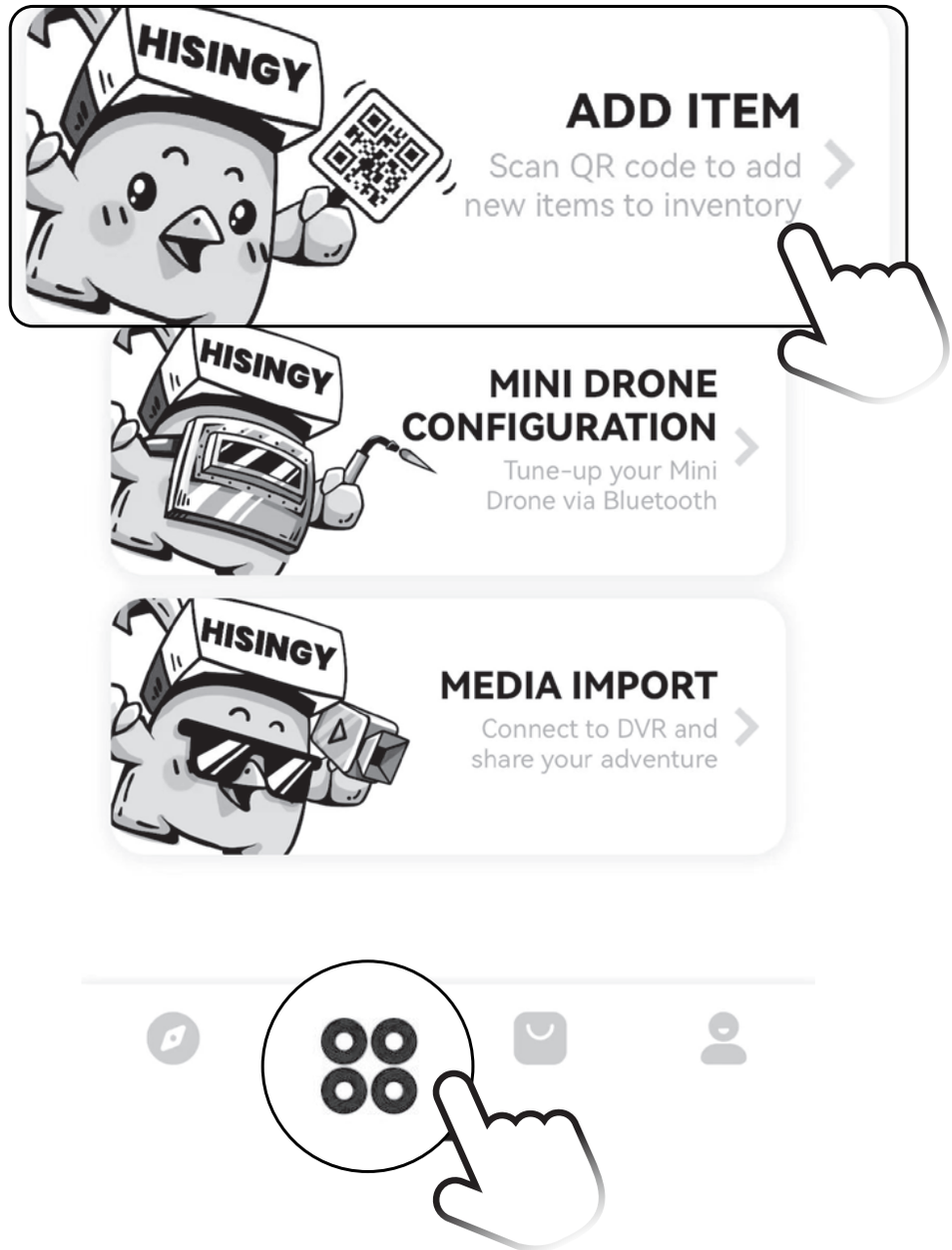

AFTER-SALES SERVICE REGULATIONS

The Warranty Scope

“HISINGY” Cockatoo & Friends Co., Ltd warrants to the original purchaser that the purchased products are free from material and workmanship defects at the date of purchase.

Not Covered by the Warranty

This warranty is non-transferable and does not cover:

Appearance damage

Damage caused by force, accident, misuse, abuse, negligence, commercial use or improper use, installation, operation or maintenance

Modify or privately modify any part of the product

Products purchased from distributors not authorized by HISINGY

5. Products not purchased from authorized HISINGY distributors

6. The product does not comply with applicable technical regulations, laws and regulations in use

Other than the express warranty above, HISINGY makes no other warranty or representation, and hereby disclaims any and all implied warranties, including, without limitation, the implied warranties of non-infringement, merchantability and fitness for a particular purpose. The purchaser acknowledges that they alone have determined that the product will suitably meet the requirements of the purchaser’ s intended use.

Warranty Claims Notice

This warranty is non-transferable and does not cover:

1. Service defects
2. Any product deemed defective by HISINGY

HISINGY reserves the right to inspect any and all products covered by warranty claims. It is HISINGY decision whether to provide the service or replace the product. Proof of purchase is required for all warranty claims.

Responsibility and Restraint

HISINGY shall not be liable for special, indirect, incidental or consequential damages, loss of profits or production or commercial loss in any way, regardless of whether such claim is based in contract, warranty, tort, negligence, strict liability or any other theory of liability, even if HISINGY has been advised of the possibility of such damages.

In addition, in no event shall the liability of HISINGY exceed the individual price of the product on which liability is asserted.

As HISINGY has no control over use, setup, final assembly, modification or misuse, no liability shall be assumed nor accepted for any resulting damage or injury. By the act of use, setup or assembly, the user accepts all resulting liability. If you as the purchaser or user are not prepared to accept the liability associated with the use of the product, purchaser is advised to return the product immediately in new and unused condition to the place of purchase.

About Law

These provisions shall be governed by Chinese law. This warranty gives you certain legal rights, and you may have other rights that vary from country to country. “HISINGY” Cockatoo & Friends Co., Ltd reserves the right to change or modify this warranty at any time, and will be notified on www.hisingy.com and HISINGY App.

Warranty Services(Questions, Assistance and Services)

Warranty or service support is not available at your local store or purchase location. You will need to contact your local distributor or HISINGY directly if there is a problem with starting the assembly, installation or use of the product. This will enable HISINGY to better answer your questions and serve you when you may need any assistance.
For questions or assistance, please visit our website www.hisingy.com for product support information, or call the customer service number mentioned in the Contact Warranty and Service Contact Information section to speak with a product supporter.

Inspection or Services

If the product requires inspection or repair and meets the requirements in the country / region where you live and use the product, please use the HISINGY online service on our website to request the submission process, or call HISINGY to obtain a Returned Goods Authorization (RMA) number. Use cartons to securely pack products. Please note that it is best to use the original product packing case, ordinary packing cases are not designed to withstand the strict transportation environment and do not provide additional protection. The shipper and transporter are liable for loss or damage to the package as HISINGY is not responsible for the goods until they have been signed for at our facility. Online service requests are available at www.hisingy.com. If you do not use the Internet, please contact HISINGY Product Support for a RMA number as well as instructions for submitting service offerings. When calling HISINGY, you will be asked to provide your full name, street address, email address, and a phone number where you can be reached during business hours. When sending products to HISINGY, please include your RMA number, a list of included products, and a brief description of the problem. A copy of your original proof of purchase (order, invoice) must be included. Make sure your name, address and RMA number are clearly written on the shipping carton.

NOTICE

Do not ship damaged flight batteries to HISINGY. If you have any questions about fight battery, please contact the appropriate HISINGY Product Support.

Warranty Requirements

Warranty conditions: You must attach your original purchase certificate to verify the date of purchase.
If your products meet the warranty conditions, we will provide your products with free repair services or replacement. Repair service or replacement is determined by HISINGY after inspection.

Non-Warranty Service

If your service is not covered by the warranty, we will inform you of the specific payment service.

Cockatoo & Friends Co., Ltd
A18 Xueqing Rd, Zhongguancun Dongsheng Science Park College Park 330, Haidian District, Beijing, China.

www.hisingy.com
hi@hisingy.com

WARNING

This device complies with Part 15 of the FCC Rules. Operation is subject to the following two conditions: (1) this device may not cause harmful interference, and (2) this device must accept any interference received, including interference that may cause undesired operation.

Changes or modifications not expressly approved by the party responsible for compliance could void the user's authority to operate the equipment.
NOTE: This equipment has been tested and found to comply with the limits for a Class B digital device, pursuant to Part 15 of the FCC Rules. These limits are designed to provide reasonable protection against harmful interference in a residential installation. This equipment generates uses and can radiate radio frequency energy and, if not installed and used in accordance with the instructions, may cause harmful interference to radio communications. However, there is no guarantee that interference will not occur in a particular installation. If this equipment does cause harmful interference to radio or television reception, which can be determined by turning the equipment off and on, the user is encouraged to try to correct the interference by one or more of the following measures:
--Reorient or relocate the receiving antenna.
--Increase the separation between the equipment and receiver.
--Connect the equipment into an outlet on a circuit different.
from that to which the receiver is connected.
--Consult the dealer or an experienced radio/TV technician for help.

The device has been evaluated to meet general RF exposure requirement. The device can be used in portable exposure condition without restriction.

CAUTION

1.Max operation temperature: 40 degree C. Min operation temperature: -10 degree C.
2. This product can be used in EU member states. This device can be used in European Union.
3.Products can be sold in all EU countries Declaration of conformity (Cockatoo & Friends Co., Ltd.) declares that Aroma diffuser with wake-up function is in compliance with the essential requirements and other relevant provisions of Directive
Directive 2014/53/EU.

Frequency :

2.4G TX: 2405-2480MHz
BT:2402MHz~2480MHz
Max power:
2.4G TX: 3.98dBm
BLE:-5.40dBm
EDR:-4.10dBm

YOUTUBE

INSTAGRAM

FACEBOOK

TWITTER

©2023 Cockatoo & Friends Co., Ltd
“HISINGY” of Cockatoo & Friends Co., Ltd
All other trademarks, service marks or logos are property of their respective owners.
ver.202308

V1.1.24.12