TEST REPORT

Product	:	8″ Intelligent All-In-One Machine
Trade mark	:	N/A
Model/Type reference	:	TXJ-X8
Serial Number	:	N/A
Report Number	:	EED32P80248503
FCC ID	:	2BAJQTXJ-X8
Date of Issue	:	Apr. 27, 2023
Test Standards	:	47 CFR Part 15 Subpart C
Test result	:	PASS

Prepared for:

Shenzhen Suanzi Technology Co., Ltd
Room 1408, Huafeng Financial Port, No. 1003, Xin'an 6th Road, Xin'an Street, Bao'an District, Shenzhen

Prepared by:

Centre Testing International Group Co., Ltd.
Hongwei Industrial Zone, Bao’an 70 District,
Shenzhen, Guangdong, China
TEL: +86-755-3368 3668
FAX: +86-755-3368 3385

Compiled by:	Frazer Li	Reviewed by:	Tom Chen
Approved by:	Aaron Ma	Date:	Apr. 27, 2023

CENTRE TESTING INTERNATIONAL GROUP CO.,LTD. CTI Report Seal

Check No.: 9331270223

2 Content

1 COVER PAGE 1
2 CONTENT 2
3 VERSION 3
4 TEST SUMMARY 4
5 GENERAL INFORMATION 5
5.1 CLIENT INFORMATION 5
5.2 GENERAL DESCRIPTION OF EUT 5
5.3 TEST CONFIGURATION 7
5.4 TEST ENVIRONMENT 8
5.5 DESCRIPTION OF SUPPORT UNITS 8
5.6 TEST LOCATION 8
5.7 MEASUREMENT UNCERTAINTY (95% CONFIDENCE LEVELS, K=2) 9
6 EQUIPMENT LIST 10
7 TEST RESULTS AND MEASUREMENT DATA 13
7.1 ANTENNA REQUIREMENT 13
7.2 AC POWER LINE CONDUCTED EMISSIONS 14
7.3 MAXIMUM CONDUCTED OUTPUT POWER 17
7.4 DTS BANDWIDTH 18
7.5 MAXIMUM POWER SPECTRAL DENSITY 19
7.6 BAND EDGE MEASUREMENTS AND CONDUCTED SPURIOUS EMISSION 20
7.7 RADIATED SPURIOUS EMISSION & RESTRICTED BANDS 21
8 APPENDIX 2.4G WIFI 41
9 PHOTOGRAPHS OF TEST SETUP 42
10 PHOTOGRAPHS OF EUT CONSTRUCTIONAL DETAILS 44

3 Version

Version No.	Date	Description
00	Apr. 27, 2023	Original

4 Test Summary

Test Item	Test Requirement	Result
Antenna Requirement	47 CFR Part 15 Subpart C Section 15.203/15.247 (c)	PASS
AC Power Line Conducted Emission	47 CFR Part 15 Subpart C Section 15.207	PASS
DTS Bandwidth	47 CFR Part 15 Subpart C Section 15.247 (a)(2)	PASS
Maximum Conducted Output Power	47 CFR Part 15 Subpart C Section 15.247 (b)(3)	PASS
Maximum Power Spectral Density	47 CFR Part 15 Subpart C Section 15.247 (e)	PASS
Band edge measurements	47 CFR Part 15 Subpart C Section 15.247(d)	PASS
Conducted Spurious Emissions	47 CFR Part 15 Subpart C Section 15.247(d)	PASS
Radiated Spurious Emission & Restricted bands	47 CFR Part 15 Subpart C Section 15.205/15.209	PASS
Remark: Company Name and Address shown on Report, the sample(s) and sample Information were provided by the applicant who should be responsible for the authenticity which CTI hasn't verified.		

5 General Information

5.1 Client Information

Applicant:	Shenzhen Suanzi Technology Co., Ltd
Address of Applicant:	Room 1408, Huafeng Financial Port, No. 1003, Xin'an 6th Road, Xin'an Street, Bao'an District, Shenzhen
Manufacturer:	Shenzhen Suanzi Technology Co., Ltd
Address of Manufacturer:	Room 1408, Huafeng Financial Port, No. 1003, Xin'an 6th Road, Xin'an Street, Bao'an District, Shenzhen
Factory:	Shenzhen Juxiang Electronics Co., Ltd
Address of Factory:	Zone B, 1F and F4, Building 10, Hebei Industrial Zone, Longhua Street, Longhua New District, Shenzhen

5.2 General Description of EUT

Product Name:	8″ Intelligent All-In-One Machine	
Model No.:	TXJ-X8	
Trade mark:	N/A	
Product Type:	☐ Mobile ☐ Portable ☒ Fix Location	
Test Power Grade:	Default	
Software Version:	V1.3.2	
Hardware Version:	V2.0	
Operation Frequency:	IEEE 802.11b/g/n(HT20): 2412MHz to 2462MHz	
Modulation Type:	IEEE for 802.11b: DSSS(CCK,DQPSK,DBPSK) IEEE for 802.11g :OFDM(64QAM, 16QAM, QPSK, BPSK) IEEE for 802.11n(HT20) : OFDM (64QAM, 16QAM,QPSK,BPSK)	
Number of Channel:	IEEE 802.11b/g, IEEE 802.11n HT20: 11 Channels	
Channel Separation:	5MHz	
Antenna Type:	PCB Antenna	
Antenna Gain:	3.60dBi	
Power Supply:	Adapter:	model：AD0241-1202000UB input：100-240V~50/60Hz，0.8A MAX output：12.0V，2.0A，24.0W
Test Voltage:	AC 120V	
Sample Received Date:	Feb. 27, 2023	
Sample tested Date:	Feb. 27, 2023 to Mar. 16, 2023	

Operation Frequency each of channel (802.11b/g/n HT20)							
Channel	Frequency	Channel	Frequency	Channel	Frequency	Channel	Frequency
1	2412MHz	4	2427MHz	7	2442MHz	10	2457MHz
2	2417MHz	5	2432MHz	8	2447MHz	11	2462MHz
3	2422MHz	6	2437MHz	9	2452MHz		

Note:
In section 15.31(m), regards to the operating frequency range over 10 MHz, the lowest frequency, the middle frequency, and the highest frequency of channel were selected to perform the test, and the selected channel see below:

802.11b/g/n (HT20)

Channel	Frequency
The lowest channel	2412MHz
The middle channel	2437MHz
The highest channel	2462MHz

5.3 Test Configuration

EUT Test Software Settings:	
Software:	CMD
EUT Power Grade:	Default
Use test software to set the lowest frequency, the middle frequency and the highest frequency keep transmitting of the EUT.	
Test Mode:	
We have verified the construction and function in typical operation. All the test modes were carried out with the EUT in transmitting operation, which was shown in this test report and defined as follows:	
Per-scan all kind of data rate in lowest channel, and found the follow list which it was worst case.	
Mode	Data rate
802.11b	1Mbps
802.11g	6Mbps
802.11n(HT20)	6.5Mbps
According to ANSI C63.10 standards, the test results are both the “worst case” and “worst setup” 1Mbps for 802.11b, 6Mbps for 802.11g, 6.5Mbps for 802.11n(HT20).	

5.4 Test Environment

Operating Environment:	
Radiated Spurious Emissions:	
Temperature:	22~25.0 °C
Humidity:	50~55 % RH
Atmospheric Pressure:	1010mbar
Conducted Emissions:	
Temperature:	22~25.0 °C
Humidity:	50~55 % RH
Atmospheric Pressure:	1010mbar
RF Conducted:	
Temperature:	22~25.0 °C
Humidity:	50~55 % RH
Atmospheric Pressure:	1010mbar

5.5 Description of Support Units

The EUT has been tested independently.

5.6 Test Location

All tests were performed at:

Centre Testing International Group Co., Ltd
Building C, Hongwei Industrial Park Block 70, Bao'an District, Shenzhen, China
Telephone: +86 (0) 755 33683668 Fax:+86 (0) 755 33683385
No tests were sub-contracted.
FCC Designation No.: CN1164

5.7 Measurement Uncertainty (95% confidence levels, k=2)

No.	Item	Measurement Uncertainty
1	Radio Frequency	7.9×10^{-8}
2	RF power, conducted	0.46dB (30MHz-1GHz)
		0.55dB (1GHz-40GHz)
3	Radiated Spurious emission test	3.3dB (9kHz-30MHz)
		4.3dB (30MHz-1GHz)
		4.5dB (1GHz-18GHz)
		3.4dB (18GHz-40GHz)
4	Conduction emission	3.5dB (9kHz to 150kHz)
		3.1dB (150kHz to 30MHz)
5	Temperature test	0.64°C
6	Humidity test	3.8%
7	DC power voltages	0.026%

6 Equipment List

RF test system					
Equipment	**Manufacturer**	**Model No.**	**Serial Number**	**Cal. Date (mm-dd-yyyy)**	**Cal. Due date (mm-dd-yyyy)**
Communication tset set	R&S	CMW500	107929	07-06-2022	07-05-2023
Signal Generator	R&S	SMBV100A	1407.6004K02-262149-CV	09-09-2022	09-08-2023
Spectrum Analyzer	R&S	FSV40	101200	08-01-2022	07-31-2023
RF control unit(power unit)	MWRF-test	MW100-RFCB	MW220620CTI-42	07-06-2022	07-05-2023
high-low temperature test chamber	Dong Guang Qin Zhuo	LK-80GA	QZ20150611879	12-19-2022	12-18-2023
Temperature/ Humidity Indicator	biaozhi	HM10	1804186	06-16-2022	06-15-2023
BT&WI-FI Automatic test software	MWRF-test	MTS 8310	2.0.0.0	---	---

Conducted disturbance Test					
Equipment	**Manufacturer**	**Model No.**	**Serial Number**	**Cal. date (mm-dd-yyyy)**	**Cal. Due date (mm-dd-yyyy)**
Receiver	R&S	ESCI	100435	05-06-2022	05-05-2023
Temperature/ Humidity Indicator	Defu	TH128	/	---	---
LISN	R&S	ENV216	100098	09-27-2022	09-26-2023
Barometer	changchun	DYM3	1188	---	---

3M Semi-anechoic Chamber (2)- Radiated disturbance Test					
Equipment	Manufacturer	Model	Serial No.	Cal. Date	Due Date
3M Chamber & Accessory Equipment	TDK	SAC-3	---	05/22/2022	05/21/2025
Receiver	R&S	ESCI7	100938-003	09/28/2022	09/27/2023
TRILOG Broadband Antenna	schwarzbeck	VULB 9163	9163-618	05/22/2022	05/21/2025
Loop Antenna	Schwarzbeck	FMZB 1519B	1519B-076	04/15/2021	04/14/2024
Microwave Preamplifier	Tonscend	EMC051845SE	980380	12/23/2022	12/23/2023
Multi device Controller	maturo	NCD/070/10711112	---	---	---
Horn Antenna	ETS-LINGREN	BBHA 9120D	9120D-1869	04/15/2021	04/14/2024
Microwave Preamplifier	Agilent	8449B	3008A02425	06/20/2022	06/19/2023

3M full-anechoic Chamber					
Equipment	**Manufacturer**	**Model No.**	**Serial Number**	**Cal. Date (mm-dd-yyyy)**	**Cal. Due date (mm-dd-yyyy)**
RSE Automatic test software	JS Tonscend	JS36-RSE	10166	---	---
Receiver	Keysight	N9038A	MY57290136	02-27-2023	02-26-2024
Spectrum Analyzer	Keysight	N9020B	MY57111112	02-21-2023	02-20-2024
Spectrum Analyzer	Keysight	N9030B	MY57140871	02-21-2023	02-20-2024
TRILOG Broadband Antenna	Schwarzbeck	VULB 9163	9163-1148	04-28-2021	04-27-2024
Horn Antenna	Schwarzbeck	BBHA 9170	9170-832	04-15-2021	04-14-2024
Horn Antenna	ETS-LINDGREN	3117	57407	07-04-2021	07-03-2024
Preamplifier	EMCI	EMC184055SE	980597	04-20-2022	04-19-2023
Preamplifier	EMCI	EMC001330	980563	04-13-2022	04-12-2023
Preamplifier	JS Tonscend	TAP-011858	AP21B806112	07-29-2022	07-28-2023
Communication test set	R&S	CMW500	102898	12-23-2022	12-22-2023
Temperature/ Humidity Indicator	biaozhi	GM1360	EE1186631	04-11-2022	04-10-2023
Fully Anechoic Chamber	TDK	FAC-3	---	01-09-2021	01-08-2024
Cable line	Times	SFT205-NMSM-2.50M	394812-0001	---	---
Cable line	Times	SFT205-NMSM-2.50M	394812-0002	---	---
Cable line	Times	SFT205-NMSM-2.50M	394812-0003	---	---
Cable line	Times	SFT205-NMSM-2.50M	393495-0001	---	---
Cable line	Times	EMC104-NMNM-1000	SN160710	---	---
Cable line	Times	SFT205-NMSM-3.00M	394813-0001	---	---
Cable line	Times	SFT205-NMNM-1.50M	381964-0001	---	---
Cable line	Times	SFT205-NMSM-7.00M	394815-0001	---	---
Cable line	Times	HF160-KMKM-3.00M	393493-0001	---	---

7 Test results and Measurement Data

7.1 Antenna Requirement

Standard requirement:	47 CFR Part 15C Section 15.203 /247(c)
15.203 requirement: An intentional radiator shall be designed to ensure that no antenna other than that furnished by the responsible party shall be used with the device. The use of a permanently attached antenna or of an antenna that uses a unique coupling to the intentional radiator, the manufacturer may design the unit so that a broken antenna can be replaced by the user, but the use of a standard antenna jack or electrical connector is prohibited. 15.247(b) (4) requirement: The conducted output power limit specified in paragraph (b) of this section is based on the use of antennas with directional gains that do not exceed 6 dBi. Except as shown in paragraph (c) of this section, if transmitting antennas of directional gain greater than 6 dBi are used, the conducted output power from the intentional radiator shall be reduced below the stated values in paragraphs (b)(1), (b)(2), and (b)(3) of this section, as appropriate, by the amount in dB that the directional gain of the antenna exceeds 6 dBi.	
EUT Antenna:	Please see Internal photos
The antenna is PCB antenna. The best case gain of the antenna is 3.60dBi.	

7.2 AC Power Line Conducted Emissions

Test Requirement:	47 CFR Part 15C Section 15.207
Test Method:	ANSI C63.10: 2013
Test Frequency Range:	150kHz to 30MHz
Receiver setup:	RBW=9 kHz, VBW=30 kHz, Sweep time=auto
Limit:	

Frequency range (MHz)	Limit (dBuV)	
	Quasi-peak	Average
0.15-0.5	66 to 56*	56 to 46*
0.5-5	56	46
5-30	60	50

* Decreases with the logarithm of the frequency.

Test Setup:

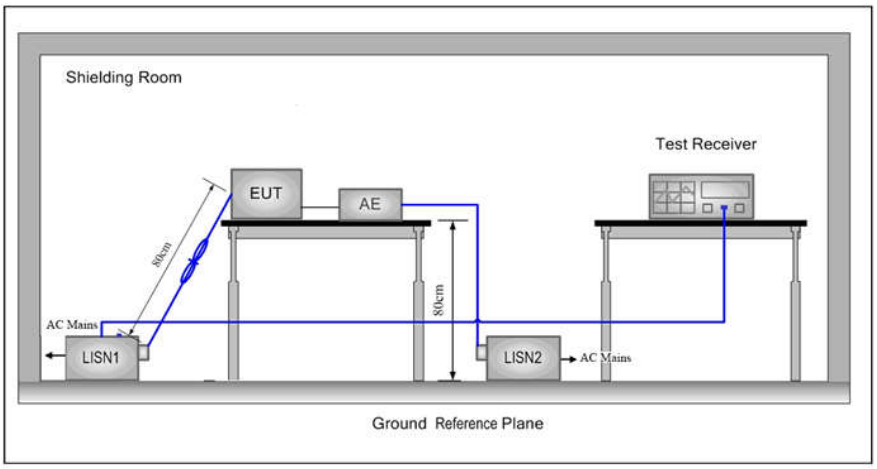

Test Procedure:

1) The mains terminal disturbance voltage test was conducted in a shielded room.
2) The EUT was connected to AC power source through a LISN 1 (Line Impedance Stabilization Network) which provides a 50Ω/50μH + 5Ω linear impedance. The power cables of all other units of the EUT were connected to a second LISN 2, which was bonded to the ground reference plane in the same way as the LISN 1 for the unit being measured. A multiple socket outlet strip was used to connect multiple power cables to a single LISN provided the rating of the LISN was not exceeded.
3) The tabletop EUT was placed upon a non-metallic table 0.8m above the ground reference plane. And for floor-standing arrangement, the EUT was placed on the horizontal ground reference plane.
4) The test was performed with a vertical ground reference plane. The rear of the EUT shall be 0.4 m from the vertical ground reference plane. The vertical ground reference plane was bonded to the horizontal ground reference plane. The LISN 1 was placed 0.8 m from the boundary of the unit under test and bonded to a ground reference plane for LISNs mounted on top of the ground reference plane. This distance was between the closest points of the LISN 1 and the EUT. All other units of the EUT and associated equipment was at least 0.8 m from the LISN 2.
5) In order to find the maximum emission, the relative positions of equipment and all of the interface cables must be changed according to ANSI C63.10: 2013 on conducted measurement.

Test Mode: All modes were tested, only the worse case lowest channel of 1Mbps for 802.11b was recorded in the report.

Test Results:	Pass

Measurement Data

Live line:

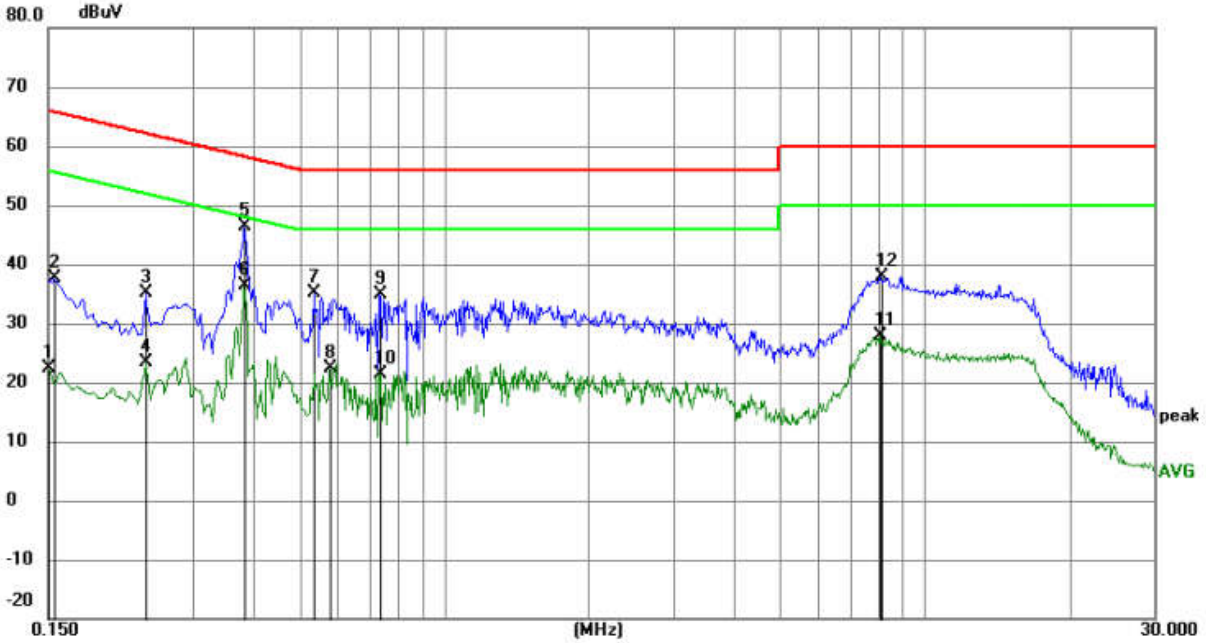

No.	Mk.	Freq.	Reading Level	Correct Factor	Measure-ment	Limit	Margin		
		MHz	dBuV	dB	dBuV	dBuV	dB	Detector	Comment
1		0.1500	12.55	9.87	22.42	56.00	-33.58	AVG	
2		0.1544	27.69	9.87	37.56	65.76	-28.20	QP	
3		0.2400	25.28	9.95	35.23	62.10	-26.87	QP	
4		0.2400	13.40	9.95	23.35	52.10	-28.75	AVG	
5		0.3840	36.46	9.99	46.45	58.19	-11.74	QP	
6	*	0.3840	26.48	9.99	36.47	48.19	-11.72	AVG	
7		0.5369	25.06	9.99	35.05	56.00	-20.95	QP	
8		0.5774	12.32	10.04	22.36	46.00	-23.64	AVG	
9		0.7347	24.94	9.87	34.81	56.00	-21.19	QP	
10		0.7389	11.60	9.87	21.47	46.00	-24.53	AVG	
11		8.1013	18.13	9.79	27.92	50.00	-22.08	AVG	
12		8.1195	28.16	9.79	37.95	60.00	-22.05	QP	

Remark:

1. The following Quasi-Peak and Average measurements were performed on the EUT:
2. Final Test Level =Receiver Reading + LISN Factor + Cable Loss.
3. If the Peak value under Average limit, the Average value is not recorded in the report.

Neutral line:

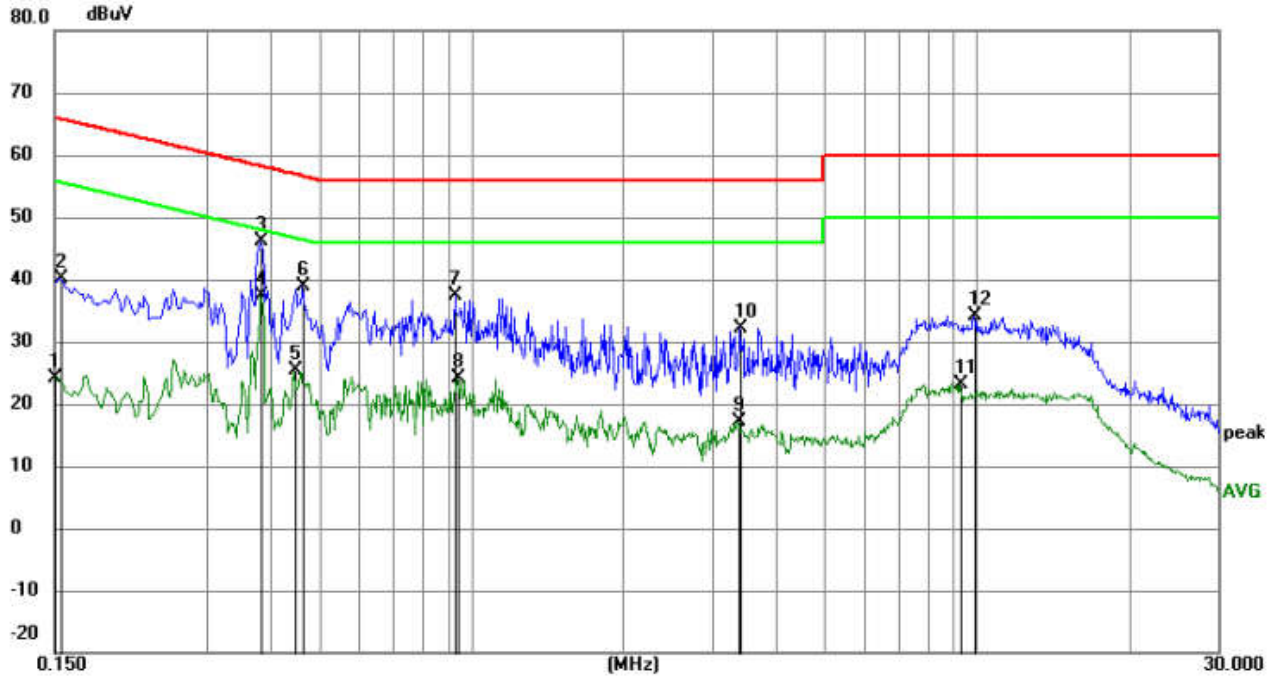

No.	Mk.	Freq.	Reading Level	Correct Factor	Measure-ment	Limit	Margin		
		MHz	dBuV	dB	dBuV	dBuV	dB	Detector	Comment
1		0.1500	14.34	9.87	24.21	56.00	-31.79	AVG	
2		0.1544	30.34	9.87	40.21	65.76	-25.55	QP	
3		0.3840	36.06	9.99	46.05	58.19	-12.14	QP	
4	*	0.3840	27.41	9.99	37.40	48.19	-10.79	AVG	
5		0.4470	15.49	9.96	25.45	46.93	-21.48	AVG	
6		0.4650	28.98	9.96	38.94	56.60	-17.66	QP	
7		0.9324	27.62	9.84	37.46	56.00	-18.54	QP	
8		0.9415	14.30	9.84	24.14	46.00	-21.86	AVG	
9		3.3675	7.34	9.79	17.13	46.00	-28.87	AVG	
10		3.4035	22.29	9.78	32.07	56.00	-23.93	QP	
11		9.2576	13.28	9.78	23.06	50.00	-26.94	AVG	
12		9.9105	24.42	9.78	34.20	60.00	-25.80	QP	

Remark:

1. The following Quasi-Peak and Average measurements were performed on the EUT:
2. Final Test Level =Receiver Reading + LISN Factor + Cable Loss.
3. If the Peak value under Average limit, the Average value is not recorded in the report.

7.3 Maximum Conducted Output Power

Test Requirement:	47 CFR Part 15C Section 15.247 (b)(3)
Test Method:	ANSI C63.10 2013
Test Setup:	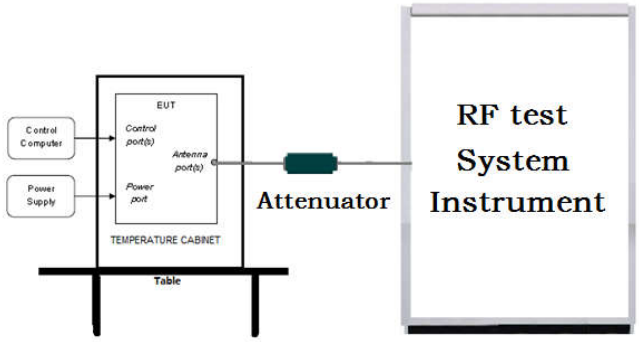
Test Procedure:	1. PKPM1 Peak power meter measurement The maximum peak conducted output power may be measured using a broadband peak RF power meter. The power meter shall have a video bandwidth that is greater than or equal to the DTS bandwidth and shall use a fast-responding diode detector. 2. Method AVGPM-G Average power measurement Method AVGPM-G is a measurement using a gated RF average power meter. Alternatively, measurements may be performed using a wideband gated RF power meter provided that the gate parameters are adjusted such that the power is measured only when the EUT is transmitting at its maximum power control level. Because the measurement is made only during the ON time of the transmitter, no duty cycle correction factor is required.
Limit:	30dBm
Test Mode:	Refer to clause 5.3
Test Results:	Refer to Appendix 2.4G WIFI

7.4 DTS Bandwidth

Test Requirement:	47 CFR Part 15C Section 15.247 (a)(2)
Test Method:	ANSI C63.10 2013
Test Setup:	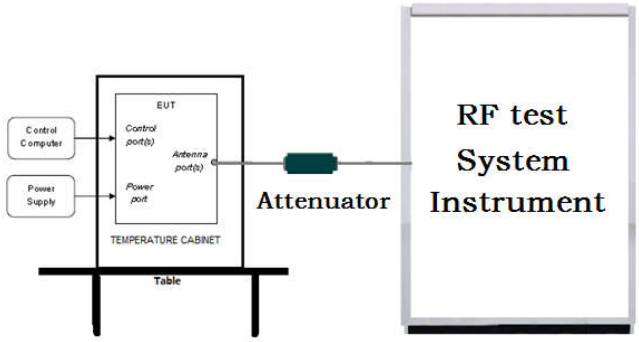 Remark: Offset=Cable loss+ attenuation factor.
Test Procedure:	a) Set RBW = 100 kHz. b) Set the VBW ⩾[3 × RBW]. c) Detector = peak. d) Trace mode = max hold. e) Sweep = auto couple. f) Allow the trace to stabilize. g) Measure the maximum width of the emission that is constrained by the frequencies associated with the two outermost amplitude points (upper and lower frequencies) that are attenuated by 6 dB relative to the maximum level measured in the fundamental emission.
Limit:	≥ 500 kHz
Test Mode:	Refer to clause 5.3
Test Results:	Refer to Appendix 2.4G WIFI

7.5 Maximum Power Spectral Density

Test Requirement:	47 CFR Part 15C Section 15.247 (e)
Test Method:	ANSI C63.10 2013
Test Setup:	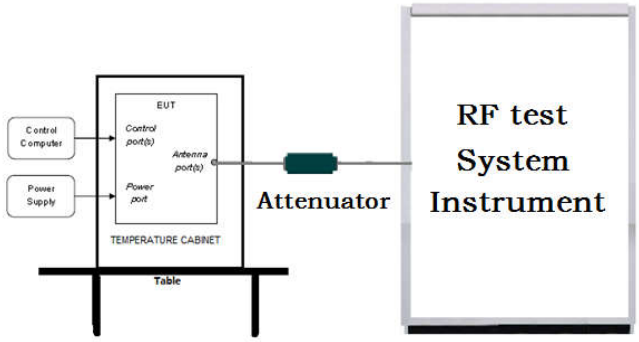 Remark: Offset=Cable loss+ attenuation factor.
Test Procedure:	a) Set analyzer center frequency to DTS channel center frequency. b) Set the span to 1.5 times the DTS bandwidth. c) Set the RBW to 3 kHz ＜ RBW ＜ 100 kHz. d) Set the VBW ＞ [3 × RBW]. e) Detector = peak. f) Sweep time = auto couple. g) Trace mode = max hold. h) Allow trace to fully stabilize. i) Use the peak marker function to determine the maximum amplitude level within the RBW. j) If measured value exceeds requirement, then reduce RBW (but no less than 3 kHz) and repeat.
Limit:	≤8.00dBm/3kHz
Test Mode:	Refer to clause 5.3
Test Results:	Refer to Appendix 2.4G WIFI

7.6 Band Edge Measurements and Conducted Spurious Emission

Test Requirement:	47 CFR Part 15C Section 15.247 (d)
Test Method:	ANSI C63.10 2013
Test Setup:	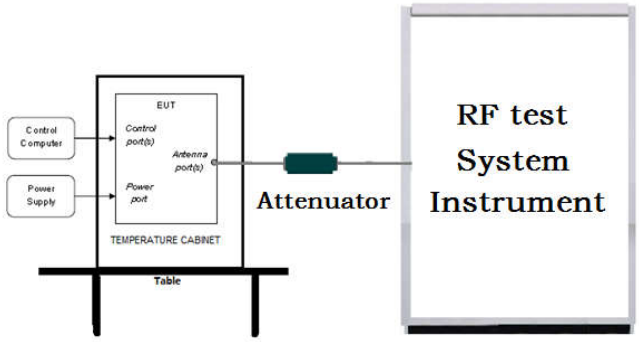 Remark: Offset=Cable loss+ attenuation factor.
Test Procedure:	a) Set RBW = 100KHz. b) Set VBW = 300KHz. c) Sweep time = auto couple. d) Detector = peak. e) Trace mode = max hold. f) Allow trace to fully stabilize. g) Use peak marker function to determine the peak amplitude level.
Limit:	In any 100 kHz bandwidth outside the frequency band in which the spread spectrum intentional radiator is operating, the radio frequency power that is produced by the intentional radiator shall be at least 20 dB below that in the 100 kHz bandwidth within the band that contains the highest level of the desired power, based on either an RF conducted or a radiated measurement.
Test Mode:	Refer to clause 5.3
Test Results:	Refer to Appendix 2.4G WIFI

7.7 Radiated Spurious Emission & Restricted bands

Test Requirement:	47 CFR Part 15C Section 15.209 and 15.205
Test Method:	ANSI C63.10 2013
Test Site:	Measurement Distance: 3m (Semi-Anechoic Chamber)
Receiver Setup:	

Frequency	Detector	RBW	VBW	Remark
0.009MHz-0.090MHz	Peak	10kHz	30kHz	Peak
0.009MHz-0.090MHz	Average	10kHz	30kHz	Average
0.090MHz-0.110MHz	Quasi-peak	10kHz	30kHz	Quasi-peak
0.110MHz-0.490MHz	Peak	10kHz	30kHz	Peak
0.110MHz-0.490MHz	Average	10kHz	30kHz	Average
0.490MHz -30MHz	Quasi-peak	10kHz	30kHz	Quasi-peak
30MHz-1GHz	Quasi-peak	100 kHz	300kHz	Quasi-peak
Above 1GHz	Peak	1MHz	3MHz	Peak
	Peak	1MHz	10kHz	Average

Limit:

Frequency	Field strength (microvolt/meter)	Limit (dBuV/m)	Remark	Measurement distance (m)
0.009MHz-0.490MHz	2400/F(kHz)	-	-	300
0.490MHz-1.705MHz	24000/F(kHz)	-	-	30
1.705MHz-30MHz	30	-	-	30
30MHz-88MHz	100	40.0	Quasi-peak	3
88MHz-216MHz	150	43.5	Quasi-peak	3
216MHz-960MHz	200	46.0	Quasi-peak	3
960MHz-1GHz	500	54.0	Quasi-peak	3
Above 1GHz	500	54.0	Average	3

Note: 15.35(b), Unless otherwise specified, the limit on peak radio frequency emissions is 20dB above the maximum permitted average emission limit applicable to the equipment under test. This peak limit applies to the total peak emission level radiated by the device.

Test Setup:	

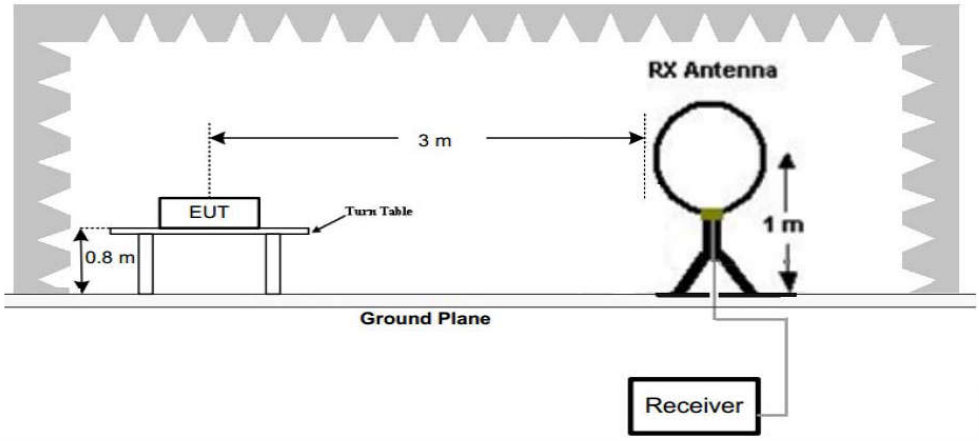

Figure 1. Below 30MHz

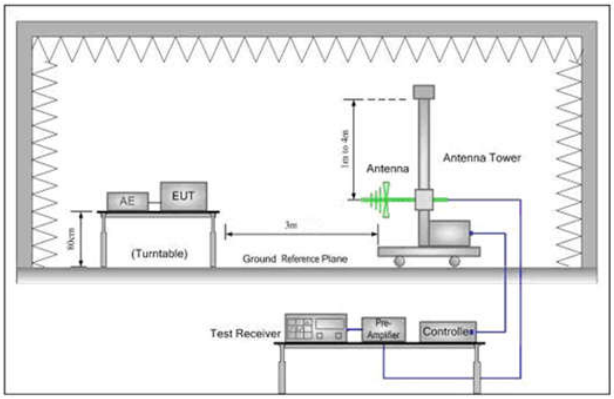

Figure 2. 30MHz to 1GHz

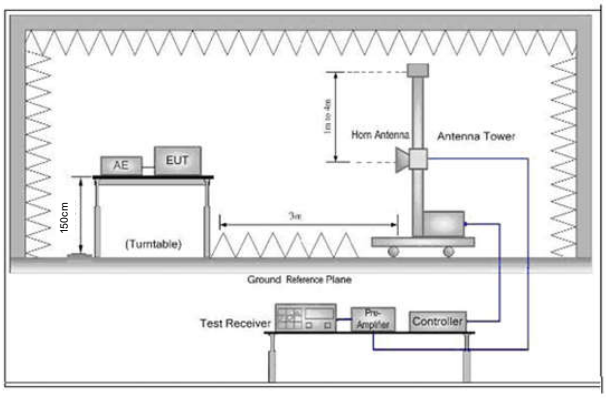

Figure 3. Above 1 GHz

Test Procedure:	a. 1) Below 1G: The EUT was placed on the top of a rotating table 0.8 meters above the ground at a 3 meter semi-anechoic camber. The table was rotated 360 degrees to determine the position of the highest radiation. 2) Above 1G: The EUT was placed on the top of a rotating table 1.5 meters above the ground at a 3 meter semi-anechoic camber. The table was rotated 360 degrees to determine the position of the highest radiation. Note: For the radiated emission test above 1GHz: Place the measurement antenna away from each area of the EUT determined to be a source of emissions at the specified measurement distance, while keeping the measurement antenna aimed at the source of emissions at each frequency of significant emissions, with polarization oriented for maximum response. The measurement antenna may have to be higher or lower than the EUT, depending on the radiation pattern of the emission and staying aimed at the emission source for receiving the maximum signal. The final measurement antenna elevation shall be that which maximizes the emissions. The measurement antenna elevation for maximum emissions shall be restricted to a range of heights of from 1 m to 4 m above the ground or reference ground plane. b. The EUT was set 3 meters away from the interference-receiving antenna, which was mounted on the top of a variable-height antenna tower. c. The antenna height is varied from one meter to four meters above the ground to determine the maximum value of the field strength. Both

	horizontal and vertical polarizations of the antenna are set to make the measurement. d. For each suspected emission, the EUT was arranged to its worst case and then the antenna was tuned to heights from 1 meter to 4 meters (for the test frequency of below 30MHz, the antenna was tuned to heights 1 meter) and the rotatable table was turned from 0 degrees to 360 degrees to find the maximum reading. e. The test-receiver system was set to Peak Detect Function and Specified Bandwidth with Maximum Hold Mode. f. If the emission level of the EUT in peak mode was 10dB lower than the limit specified, then testing could be stopped and the peak values of the EUT would be reported. Otherwise the emissions that did not have 10dB margin would be re-tested one by one using peak, quasi-peak or average method as specified and then reported in a data sheet. g. Test the EUT in the lowest channel (2402MHz),the middle channel (2440MHz),the Highest channel (2480MHz) h. The radiation measurements are performed in X, Y, Z axis positioning for Transmitting mode, and found the X axis positioning which it is the worst case. i. Repeat above procedures until all frequencies measured was complete.
Test Mode:	Refer to clause 5.3
Test Results:	Pass

Radiated Spurious Emission below 1GHz:

During the test, the Radiates Emission from 30MHz to 1GHz was performed in all modes, only the worst case lowest channel of 1Mbps for 802.11b was recorded in the report.

Horizontal:

Test Graph

No.	Mk.	Freq.	Reading Level	Correct Factor	Measure-ment	Limit	Margin		Antenna Height	Table Degree	
		MHz	dBuV	dB	dBuV/m	dBuV/m	dB	Detector	cm	degree	Comment
1	*	216.0237	24.11	13.52	37.63	40.00	-2.37	peak			
2	!	263.8190	28.86	15.42	44.28	47.00	-2.72	peak			
3		360.4476	22.58	17.72	40.30	47.00	-6.70	peak			
4		408.9458	21.05	18.51	39.56	47.00	-7.44	peak			
5		455.9057	19.43	19.66	39.09	47.00	-7.91	peak			
6		504.7062	18.23	20.83	39.06	47.00	-7.94	peak			

Vertical:

Test Graph

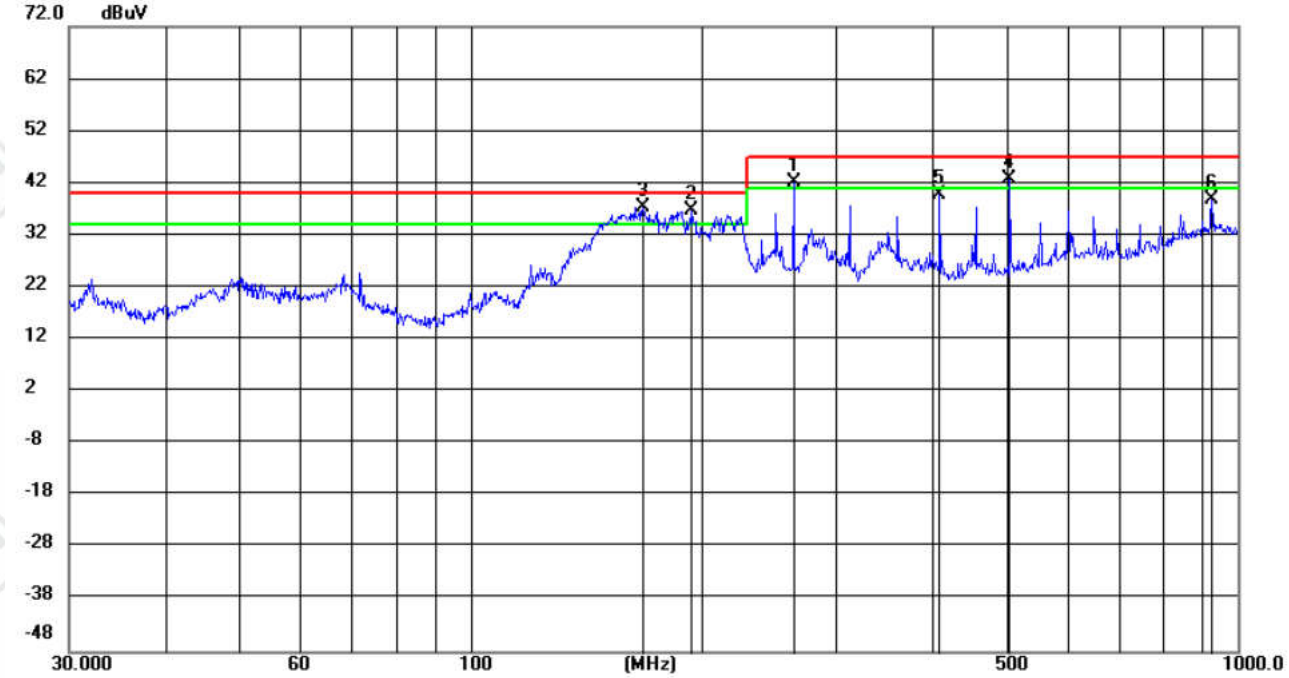

No.	Mk.	Freq.	Reading Level	Correct Factor	Measure-ment	Limit	Margin		Antenna Height	Table Degree	
		MHz	dBuV	dB	dBuV/m	dBuV/m	dB	Detector	cm	degree	Comment
1	!	263.8190	26.61	15.42	42.03	47.00	-4.97	peak			
2	!	194.4533	25.20	11.64	36.84	40.00	-3.16	peak			
3	*	167.8240	26.82	10.47	37.29	40.00	-2.71	peak			
4	!	504.7062	21.98	20.83	42.81	47.00	-4.19	peak			
5		408.9458	21.33	18.51	39.84	47.00	-7.16	peak			
6		925.7562	10.67	28.19	38.86	47.00	-8.14	peak			

Radiated Spurious Emission above 1GHz:

Remark: Through Pre-scan, for 20MHz Occupied Bandwidth, 802.11 b mode was the worst case; for 40MHz Occupied Bandwidth, 802.11 n(HT20) mode was the worst case; only the worst case was recorded in the report.

Mode:			802.11 b Transmitting			Channel:		2412MHz	
NO	Freq. [MHz]	Factor [dB]	Reading [dBμV]	Level [dBμV/m]	Limit [dBμV/m]	Margin [dB]	Result	Polarity	Remark
1	1357.8358	1.25	39.59	40.84	74.00	33.16	PASS	H	PK
2	2019.902	4.62	39.25	43.87	74.00	30.13	PASS	H	PK
3	3618.0412	-20.29	59.91	39.62	74.00	34.38	PASS	H	PK
4	4824.1216	-16.22	57.13	40.91	74.00	33.09	PASS	H	PK
5	8646.3764	-10.25	51.97	41.72	74.00	32.28	PASS	H	PK
6	13761.7174	-1.68	48.29	46.61	74.00	27.39	PASS	H	PK
7	1256.8257	0.95	40.20	41.15	74.00	32.85	PASS	V	PK
8	1890.6891	3.96	38.41	42.37	74.00	31.63	PASS	V	PK
9	3618.0412	-20.29	61.16	40.87	74.00	33.13	PASS	V	PK
10	4824.1216	-16.22	54.58	38.36	74.00	35.64	PASS	V	PK
11	9246.4164	-7.91	49.72	41.81	74.00	32.19	PASS	V	PK
12	14308.7539	-0.29	46.40	46.11	74.00	27.89	PASS	V	PK

Mode:			802.11 b Transmitting			Channel:		2437MHz	
NO	Freq. [MHz]	Factor [dB]	Reading [dBμV]	Level [dBμV/m]	Limit [dBμV/m]	Margin [dB]	Result	Polarity	Remark
1	1281.6282	1.01	40.00	41.01	74.00	32.99	PASS	H	PK
2	1771.6772	3.18	39.11	42.29	74.00	31.71	PASS	H	PK
3	3655.0437	-20.13	61.04	40.91	74.00	33.09	PASS	H	PK
4	4874.1249	-16.21	55.40	39.19	74.00	34.81	PASS	H	PK
5	7276.2851	-11.72	51.40	39.68	74.00	34.32	PASS	H	PK
6	12578.6386	-4.26	49.43	45.17	74.00	28.83	PASS	H	PK
7	1414.8415	1.40	39.25	40.65	74.00	33.35	PASS	V	PK
8	1772.4772	3.19	39.05	42.24	74.00	31.76	PASS	V	PK
9	3655.0437	-20.13	62.31	42.18	74.00	31.82	PASS	V	PK
10	4790.1193	-16.26	54.58	38.32	74.00	35.68	PASS	V	PK
11	8911.3941	-9.12	49.59	40.47	74.00	33.53	PASS	V	PK
12	13700.7134	-1.77	47.60	45.83	74.00	28.17	PASS	V	PK

Mode:			802.11 b Transmitting			Channel:		2462MHz	
NO	Freq. [MHz]	Factor [dB]	Reading [dBμV]	Level [dBμV/m]	Limit [dBμV/m]	Margin [dB]	Result	Polarity	Remark
1	1427.4427	1.41	38.96	40.37	74.00	33.63	PASS	H	PK
2	1968.4968	4.38	38.20	42.58	74.00	31.42	PASS	H	PK
3	3693.0462	-19.96	60.97	41.01	74.00	32.99	PASS	H	PK
4	5285.1523	-14.76	51.89	37.13	74.00	36.87	PASS	H	PK
5	9167.4112	-8.14	49.45	41.31	74.00	32.69	PASS	H	PK
6	12532.6355	-4.60	49.41	44.81	74.00	29.19	PASS	H	PK
7	1437.0437	1.42	39.15	40.57	74.00	33.43	PASS	V	PK
8	1979.0979	4.44	38.66	43.10	74.00	30.90	PASS	V	PK
9	3693.0462	-19.96	62.45	42.49	74.00	31.51	PASS	V	PK
10	5703.1802	-13.90	52.09	38.19	74.00	35.81	PASS	V	PK
11	8965.3977	-8.73	49.41	40.68	74.00	33.32	PASS	V	PK
12	12589.6393	-4.18	48.58	44.40	74.00	29.60	PASS	V	PK

Mode:			802.11 n(HT20) Transmitting			Channel:		2412MHz	
NO	Freq. [MHz]	Factor [dB]	Reading [dBμV]	Level [dBμV/m]	Limit [dBμV/m]	Margin [dB]	Result	Polarity	Remark
1	1413.8414	1.40	39.47	40.87	74.00	33.13	PASS	H	PK
2	2104.7105	4.83	38.92	43.75	74.00	30.25	PASS	H	PK
3	3618.0412	-20.29	61.02	40.73	74.00	33.27	PASS	H	PK
4	5768.1845	-13.68	51.95	38.27	74.00	35.73	PASS	H	PK
5	9281.4188	-7.94	49.35	41.41	74.00	32.59	PASS	H	PK
6	14340.756	0.24	46.79	47.03	74.00	26.97	PASS	H	PK
7	1387.8388	1.35	39.62	40.97	74.00	33.03	PASS	V	PK
8	2035.5036	4.67	38.85	43.52	74.00	30.48	PASS	V	PK
9	3618.0412	-20.29	60.69	40.40	74.00	33.60	PASS	V	PK
10	6086.2057	-13.12	51.51	38.39	74.00	35.61	PASS	V	PK
11	9240.416	-7.91	49.70	41.79	74.00	32.21	PASS	V	PK
12	13744.7163	-1.70	47.98	46.28	74.00	27.72	PASS	V	PK

Mode:			802.11 n(HT20) Transmitting			Channel:		2437MHz	
NO	Freq. [MHz]	Factor [dB]	Reading [dBμV]	Level [dBμV/m]	Limit [dBμV/m]	Margin [dB]	Result	Polarity	Remark
1	1240.024	0.90	39.48	40.38	74.00	33.62	PASS	H	PK
2	1894.8895	4.00	38.41	42.41	74.00	31.59	PASS	H	PK
3	3655.0437	-20.13	60.25	40.12	74.00	33.88	PASS	H	PK
4	5987.1991	-13.04	50.96	37.92	74.00	36.08	PASS	H	PK
5	10378.4919	-6.32	48.08	41.76	74.00	32.24	PASS	H	PK
6	13714.7143	-1.75	47.81	46.06	74.00	27.94	PASS	H	PK
7	1300.8301	1.06	39.67	40.73	74.00	33.27	PASS	V	PK
8	1677.4677	2.79	39.82	42.61	74.00	31.39	PASS	V	PK
9	3655.0437	-20.13	61.92	41.79	74.00	32.21	PASS	V	PK
10	6908.2606	-11.83	50.43	38.60	74.00	35.40	PASS	V	PK
11	11211.5474	-6.45	49.39	42.94	74.00	31.06	PASS	V	PK
12	14338.7559	0.20	46.22	46.42	74.00	27.58	PASS	V	PK

Mode:			802.11 n(HT20) Transmitting			Channel:		2462MHz	
NO	Freq. [MHz]	Factor [dB]	Reading [dBμV]	Level [dBμV/m]	Limit [dBμV/m]	Margin [dB]	Result	Polarity	Remark
1	1285.2285	1.03	39.24	40.27	74.00	33.73	PASS	H	PK
2	1779.678	3.22	39.00	42.22	74.00	31.78	PASS	H	PK
3	3693.0462	-19.96	61.78	41.82	74.00	32.18	PASS	H	PK
4	6329.2219	-12.90	51.13	38.23	74.00	35.77	PASS	H	PK
5	10283.4856	-6.57	48.70	42.13	74.00	31.87	PASS	H	PK
6	13737.7158	-1.72	48.82	47.10	74.00	26.90	PASS	H	PK
7	1284.2284	1.01	39.73	40.74	74.00	33.26	PASS	V	PK
8	1957.2957	4.33	38.72	43.05	74.00	30.95	PASS	V	PK
9	3693.0462	-19.96	62.42	42.46	74.00	31.54	PASS	V	PK
10	6696.2464	-12.49	51.32	38.83	74.00	35.17	PASS	V	PK
11	11394.5596	-6.15	49.72	43.57	74.00	30.43	PASS	V	PK
12	16894.9263	3.02	45.87	48.89	74.00	25.11	PASS	V	PK

Remark:

1) The field strength is calculated by adding the Antenna Factor, Cable Factor & Preamplifier. The basic equation with a sample calculation is as follows:

   Final Test Level =Receiver Reading + Antenna Factor + Cable Factor – Preamplifier Factor

2) Scan from 9kHz to 25GHz, the disturbance above 10GHz and below 30MHz was very low. As shown in this section, for frequencies above 1GHz, the field strength limits are based on average limits. However, the peak field strength of any emission shall not exceed the maximum permitted average limits specified above by more than 20 dB under any condition of modulation. So, only the peak measurements were shown in the report.

Restricted bands:

Test plot as follows:

EUT_Name	WIFI	Test_Model	\
Test_Mode	802.11 b Transmitting	Test_Frequency	2412
Tset_Engineer	yusongwei	Test_Date	2023\3\13
Remark	\		

Test Graph

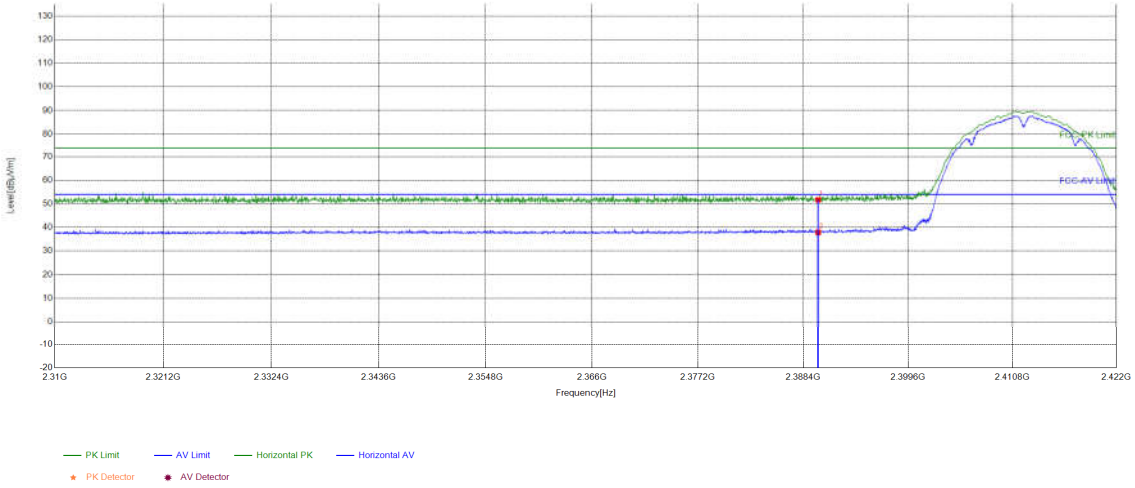

Suspected List									
NO	Freq. [MHz]	Factor [dB]	Reading [dBμV]	Level [dBμV/m]	Limit [dBμV/m]	Margin [dB]	Result	Polarity	Remark
1	2390	13.75	37.98	51.73	74.00	22.27	PASS	Horizontal	PK
2	2390	13.75	24.12	37.87	54.00	16.13	PASS	Horizontal	AV

EUT_Name	WIFI	Test_Model	\
Test_Mode	802.11 b Transmitting	Test_Frequency	2412
Tset_Engineer	yusongwei	Test_Date	2023\3\13
Remark	\		

Test Graph

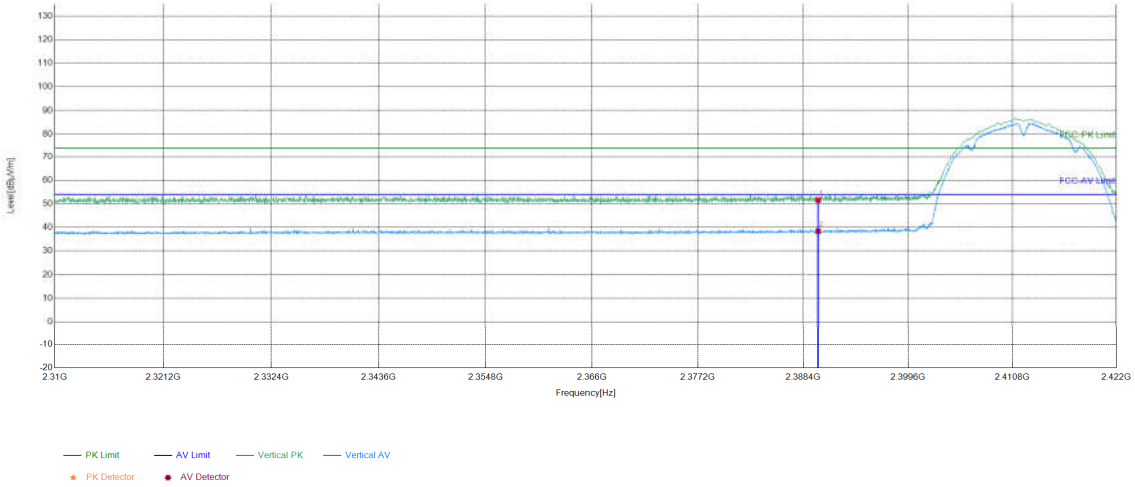

Suspected List									
NO	Freq. [MHz]	Factor [dB]	Reading [dBμV]	Level [dBμV/m]	Limit [dBμV/m]	Margin [dB]	Result	Polarity	Remark
1	2390	13.75	37.87	51.62	74.00	22.38	PASS	Vertical	PK
2	2390	13.75	24.66	38.41	54.00	15.59	PASS	Vertical	AV

EUT_Name	WIFI	Test_Model	\
Test_Mode	802.11 b Transmitting	Test_Frequency	2462
Tset_Engineer	yusongwei	Test_Date	2023\3\13
Remark	\		

Test Graph

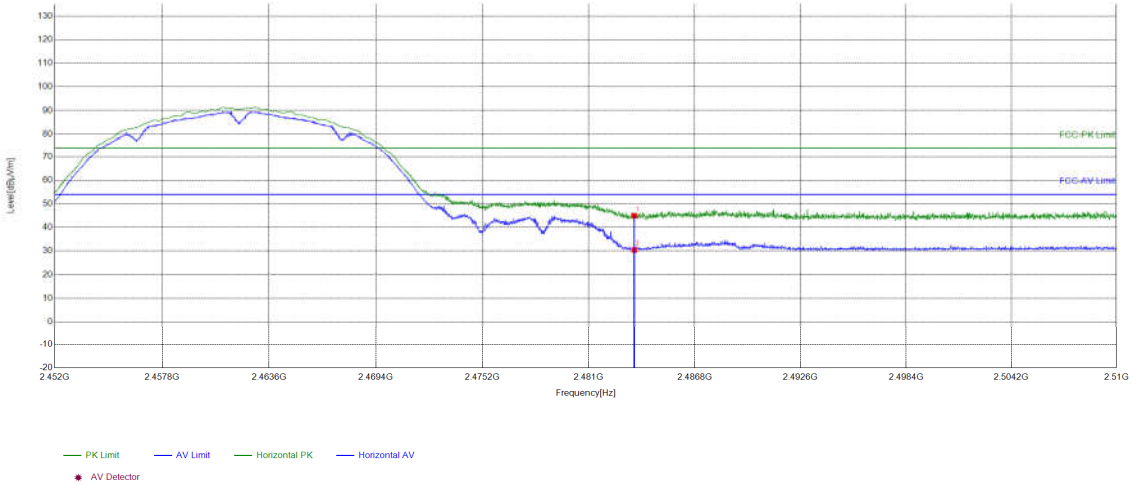

Suspected List									
NO	Freq. [MHz]	Factor [dB]	Reading [dBµV]	Level [dBµV/m]	Limit [dBµV/m]	Margin [dB]	Result	Polarity	Remark
1	2483.5	6.57	38.37	44.94	74.00	29.06	PASS	Horizontal	PK
2	2483.5	6.57	23.85	30.42	54.00	23.58	PASS	Horizontal	AV

EUT_Name	WIFI	Test_Model	\
Test_Mode	802.11 b Transmitting	Test_Frequency	2462
Tset_Engineer	yusongwei	Test_Date	2023\3\13
Remark	\		

Test Graph

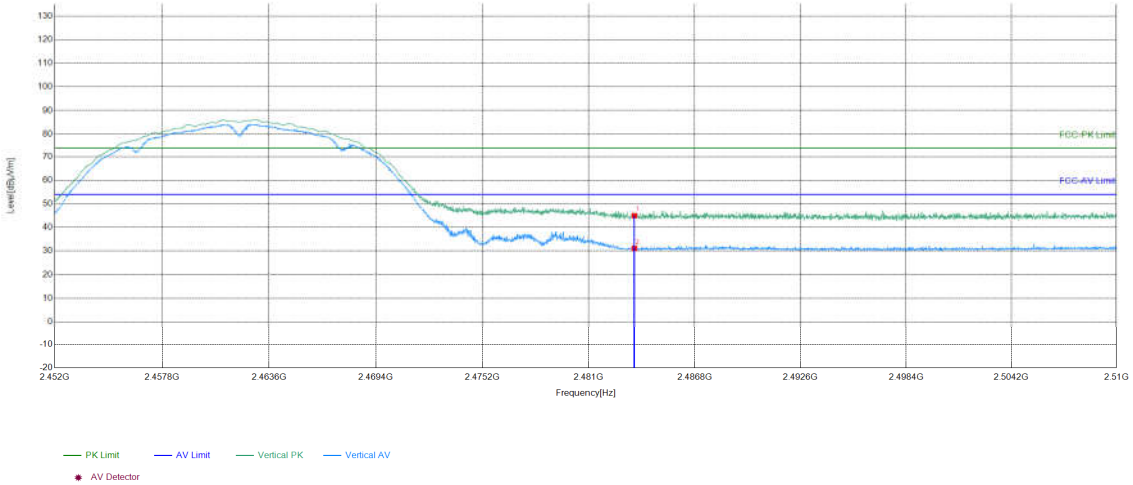

Suspected List									
NO	Freq. [MHz]	Factor [dB]	Reading [dBµV]	Level [dBµV/m]	Limit [dBµV/m]	Margin [dB]	Result	Polarity	Remark
1	2483.5	6.57	38.41	44.98	74.00	29.02	PASS	Vertical	PK
2	2483.5	6.57	24.55	31.12	54.00	22.88	PASS	Vertical	AV

EUT_Name	WIFI	Test_Model	\
Test_Mode	802.11 g Transmitting	Test_Frequency	2412
Tset_Engineer	yusongwei	Test_Date	2023\3\13
Remark	\		

Test Graph

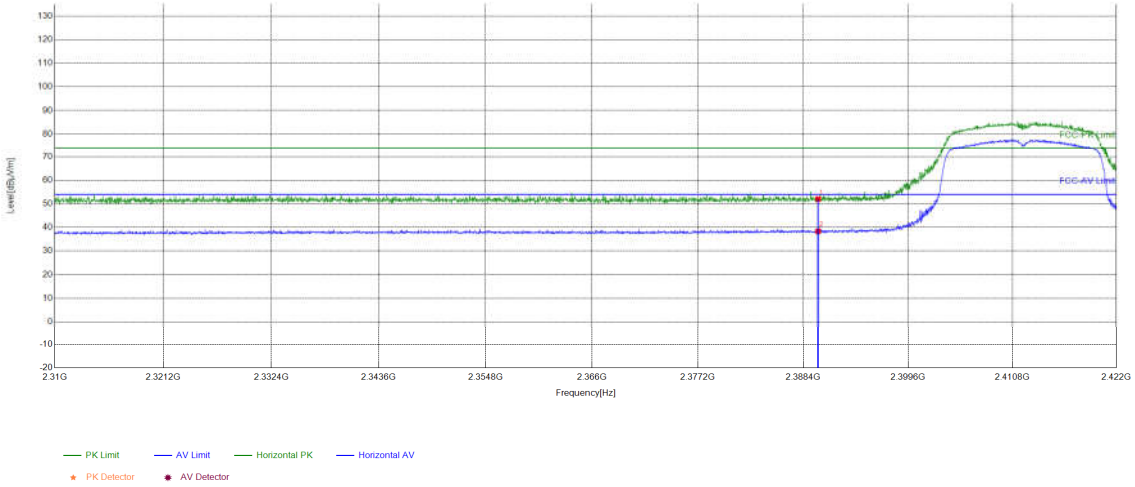

Suspected List									
NO	Freq. [MHz]	Factor [dB]	Reading [dBμV]	Level [dBμV/m]	Limit [dBμV/m]	Margin [dB]	Result	Polarity	Remark
1	2390	13.75	38.32	52.07	74.00	21.93	PASS	Horizontal	PK
2	2390	13.75	24.64	38.39	54.00	15.61	PASS	Horizontal	AV

EUT_Name	WIFI	Test_Model	\
Test_Mode	802.11 g Transmitting	Test_Frequency	2412
Tset_Engineer	yusongwei	Test_Date	2023\3\13
Remark	\		

Test Graph

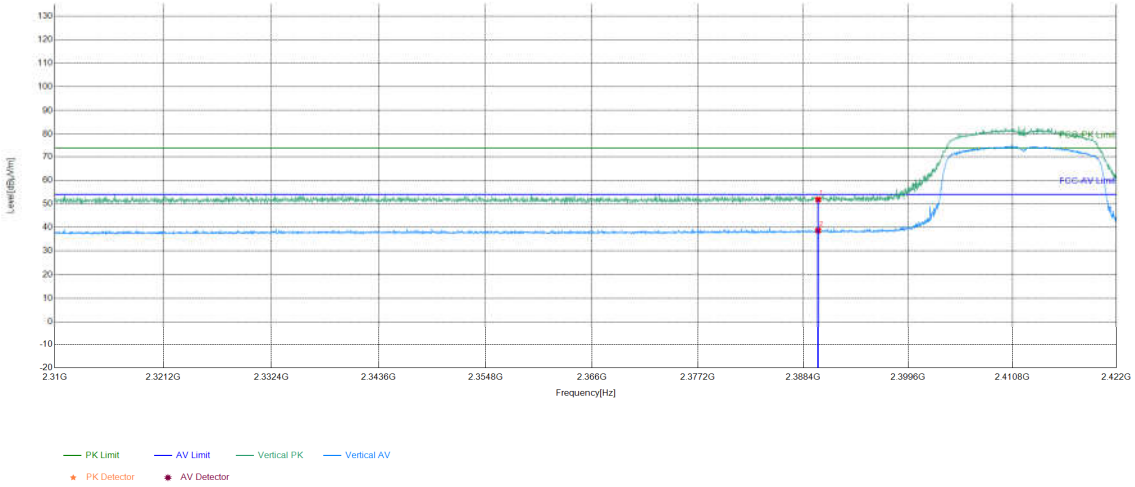

Suspected List									
NO	Freq. [MHz]	Factor [dB]	Reading [dBμV]	Level [dBμV/m]	Limit [dBμV/m]	Margin [dB]	Result	Polarity	Remark
1	2390	13.75	38.07	51.82	74.00	22.18	PASS	Vertical	PK
2	2390	13.75	24.96	38.71	54.00	15.29	PASS	Vertical	AV

EUT_Name	WIFI	Test_Model	\
Test_Mode	802.11 g Transmitting	Test_Frequency	2462
Tset_Engineer	yusongwei	Test_Date	2023\3\13
Remark	\		

Test Graph

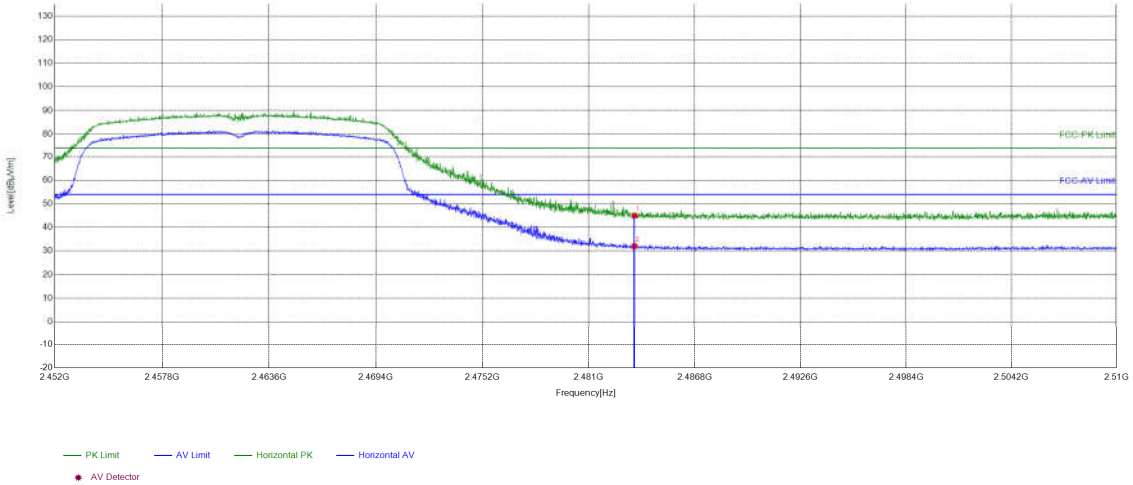

Suspected List									
NO	Freq. [MHz]	Factor [dB]	Reading [dBμV]	Level [dBμV/m]	Limit [dBμV/m]	Margin [dB]	Result	Polarity	Remark
1	2483.5	6.57	38.43	45.00	74.00	29.00	PASS	Horizontal	PK
2	2483.5	6.57	25.51	32.08	54.00	21.92	PASS	Horizontal	AV

EUT_Name	WIFI	Test_Model	\
Test_Mode	802.11 g Transmitting	Test_Frequency	2462
Tset_Engineer	yusongwei	Test_Date	2023\3\13
Remark	\		

Test Graph

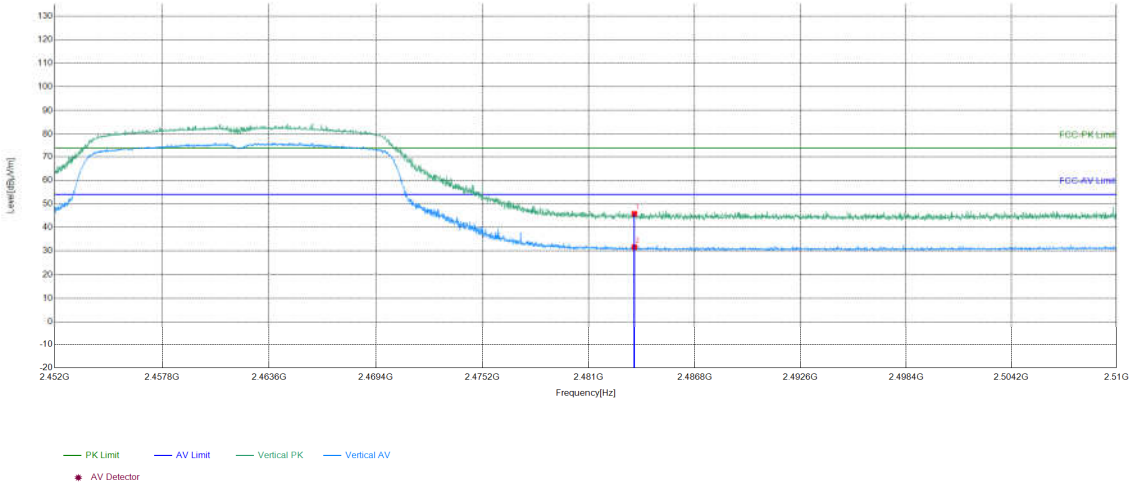

Suspected List									
NO	Freq. [MHz]	Factor [dB]	Reading [dBμV]	Level [dBμV/m]	Limit [dBμV/m]	Margin [dB]	Result	Polarity	Remark
1	2483.5	6.57	39.23	45.80	74.00	28.20	PASS	Vertical	PK
2	2483.5	6.57	25.08	31.65	54.00	22.35	PASS	Vertical	AV

EUT_Name	WIFI	Test_Model	\
Test_Mode	802.11 n(HT20) Transmitting	Test_Frequency	2412
Tset_Engineer	yusongwei	Test_Date	2023\3\13
Remark	\		

Test Graph

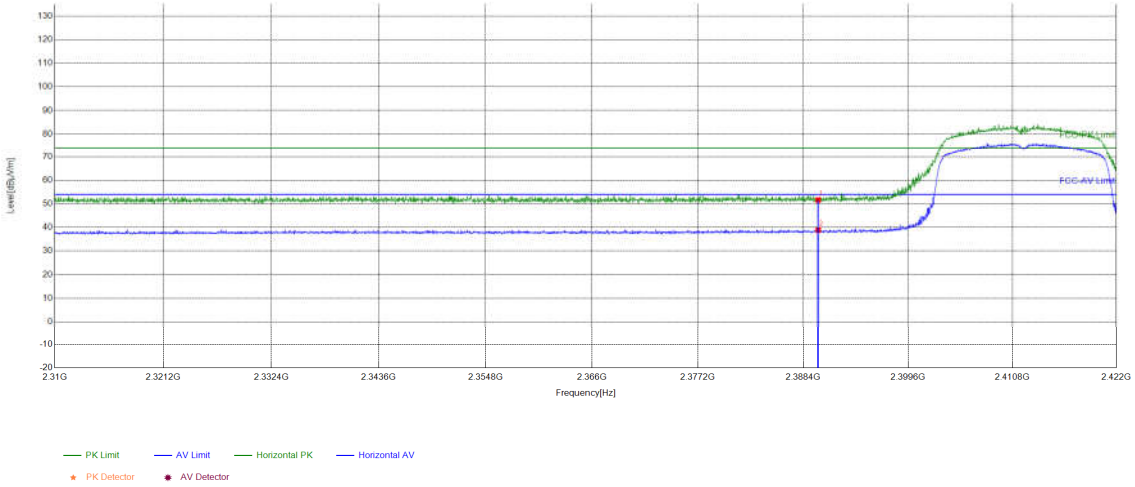

Suspected List									
NO	Freq. [MHz]	Factor [dB]	Reading [dBμV]	Level [dBμV/m]	Limit [dBμV/m]	Margin [dB]	Result	Polarity	Remark
1	2390	13.75	37.92	51.67	74.00	22.33	PASS	Horizontal	PK
2	2390	13.75	25.16	38.91	54.00	15.09	PASS	Horizontal	AV

EUT_Name	WIFI	Test_Model	\
Test_Mode	802.11 n(HT20) Transmitting	Test_Frequency	2412
Tset_Engineer	yusongwei	Test_Date	2023\3\13
Remark	\		

Test Graph

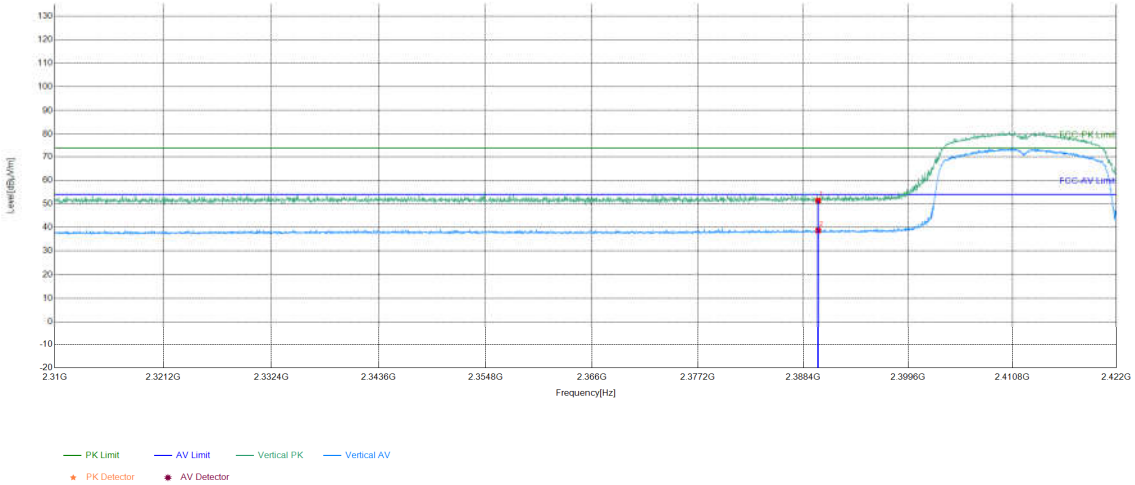

Suspected List									
NO	Freq. [MHz]	Factor [dB]	Reading [dBμV]	Level [dBμV/m]	Limit [dBμV/m]	Margin [dB]	Result	Polarity	Remark
1	2390	13.75	37.64	51.39	74.00	22.61	PASS	Vertical	PK
2	2390	13.75	24.97	38.72	54.00	15.28	PASS	Vertical	AV

EUT_Name	WIFI	Test_Model	\
Test_Mode	802.11 n(HT20) Transmitting	Test_Frequency	2462
Tset_Engineer	yusongwei	Test_Date	2023\3\13
Remark	\		

Test Graph

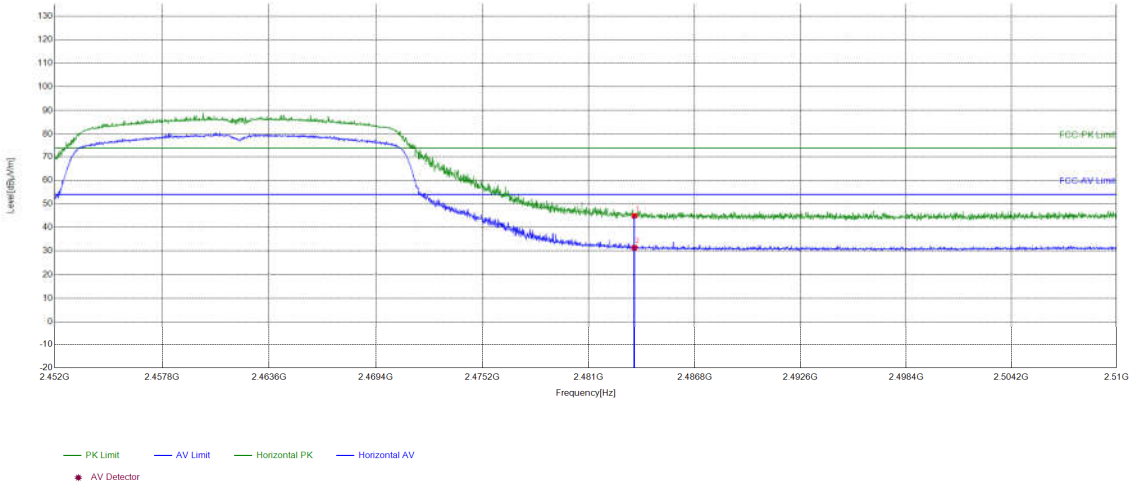

Suspected List									
NO	Freq. [MHz]	Factor [dB]	Reading [dBμV]	Level [dBμV/m]	Limit [dBμV/m]	Margin [dB]	Result	Polarity	Remark
1	2483.5	6.57	38.39	44.96	74.00	29.04	PASS	Horizontal	PK
2	2483.5	6.57	24.81	31.38	54.00	22.62	PASS	Horizontal	AV

EUT_Name	WIFI	Test_Model	\
Test_Mode	802.11 n(HT20) Transmitting	Test_Frequency	2462
Tset_Engineer	yusongwei	Test_Date	2023\3\13
Remark	\		

Test Graph

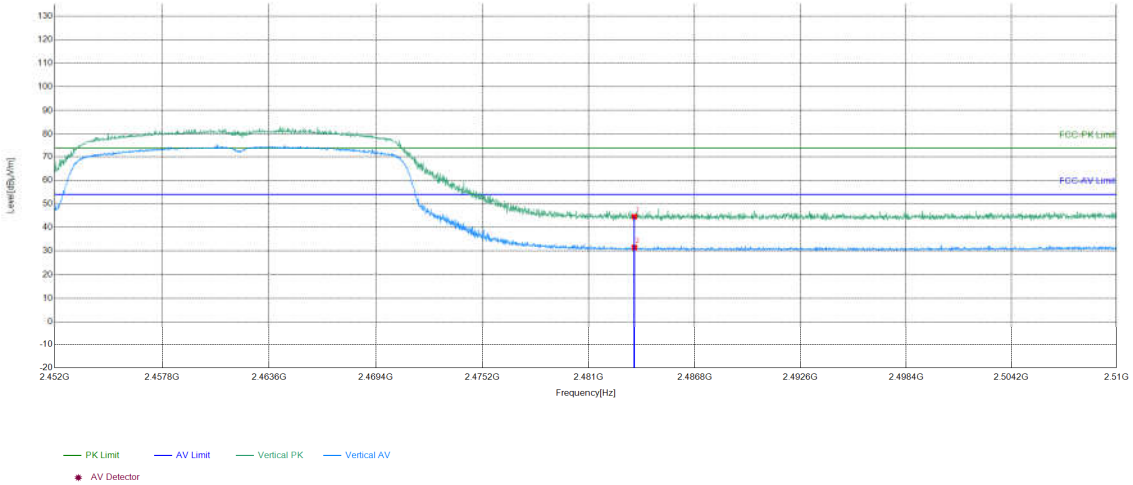

Suspected List									
NO	Freq. [MHz]	Factor [dB]	Reading [dBµV]	Level [dBµV/m]	Limit [dBµV/m]	Margin [dB]	Result	Polarity	Remark
1	2483.5	6.57	37.99	44.56	74.00	29.44	PASS	Vertical	PK
2	2483.5	6.57	24.93	31.50	54.00	22.50	PASS	Vertical	AV

Note:
The field strength is calculated by adding the Antenna Factor, Cable Factor & Preamplifier. The basic equation with a sample calculation is as follows:
Final Test Level =Receiver Reading - Correct Factor
Correct Factor = Preamplifier Factor– Antenna Factor–Cable Factor

8 Appendix 2.4G WIFI

Refer to Appendix: 2.4G WIFI of EED32P80248503