# 承认书项目表

| NO. | 内 容<br>（Contents） | 页数<br>（Number of Page） | 页码<br>（Page Code） |
|---|---|---|---|
| 1 | 承认书封面 （Spec Cover） | 1 | 1 |
| 2 | 承认书项目表（Spec Item ） | 1 | 2 |
| 3 | 工程成品图 （Drawing） | 1 | 3 |
| 4 | 电性测试报告（Test Reports ） | 1 | 4 |
| 5 | S 参数测试 （S Parameter ） | 1 | 5 |
| 6 | 增益测试 （Gain Test ） | 1 | 6 |
| 7 | | | |
| 8 | | | |
| 9 | | | |
| 10 | - | - | - |
| 11 | - | - | - |
| 12 | - | - | - |

| SIGN | DATE | DESCRIPTION | APPROVER |
|---|---|---|---|
| A | | | |
| B | | | |
| C | | | |

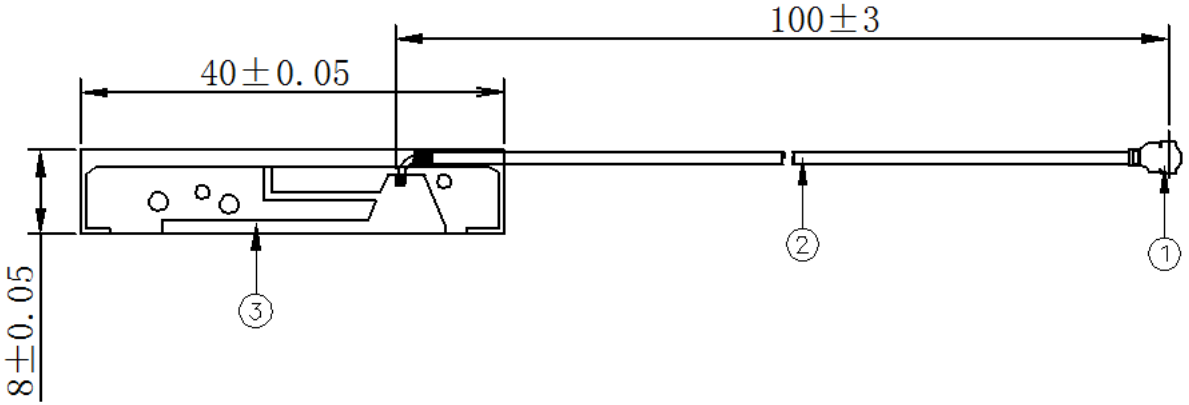


| No. | Part Number | Name | Material | Q'ty |
|---|---|---|---|---|
| 3 | WP408-IPX1-10cm | PCB | FPC40*8*0.67mm | 1 |
| 2 | R-CB-113B | Coaxial Cable | O.D. 1.13mm Black | 1 |
| 1 | CI-113 | Connector | IPEX(U.FL/IPX13) | 1 |

# 东莞市创捷电子有限公司

TITLE:WIFI ANTENNA

PART NO.: WP408-IPX1-10cm

DWG NAME:

| APPROVED BY | CHECKED BY | DESIDNED BY | |
|---|---|---|---|
| jeff 2014-03-18 | leon 2014-03-18 | YD 2014-03-18 | UNITS: mm<br>SCALE: 1/1<br>REVISION: A |

Tolerance

X.X Ñ0.20
X.XX Ñ0.10
XÁ ÑÁ

# 电性测试报告
# Test Reports

| Electrical Properties | |
|---|---|
| Frequency | 2.4~2.5GHz 4.9~5.9GHz |
| Impedance | 50 0hm Nominal |
| V.S.W.R | 1.92 : 1 Max |
| Return Loss | -10 dB Max |
| Radiation | Omni-directional |
| Gain (Peak) | 5.0 dB |
| Cable Loss | 1.5dB / m Max @ 2450 MHz |
| Polarization | Linear, Vertical |
| Admitted Power | 1 W |
| Connector | ipex |
| **Physical Properties** | |
| Antenna Material | pcb |
| Cable Type | O.D. 1.13mm // 105 mm |
| Operating Temp. | -10 ~ +60 ˚C |
| Storage Temp. | -10 ~ +70 ˚C |
| Cable Color | Black |

# S 参数测试

# S Parameter Test

| | |
|---|---|
| *Agilent E5071C* | |

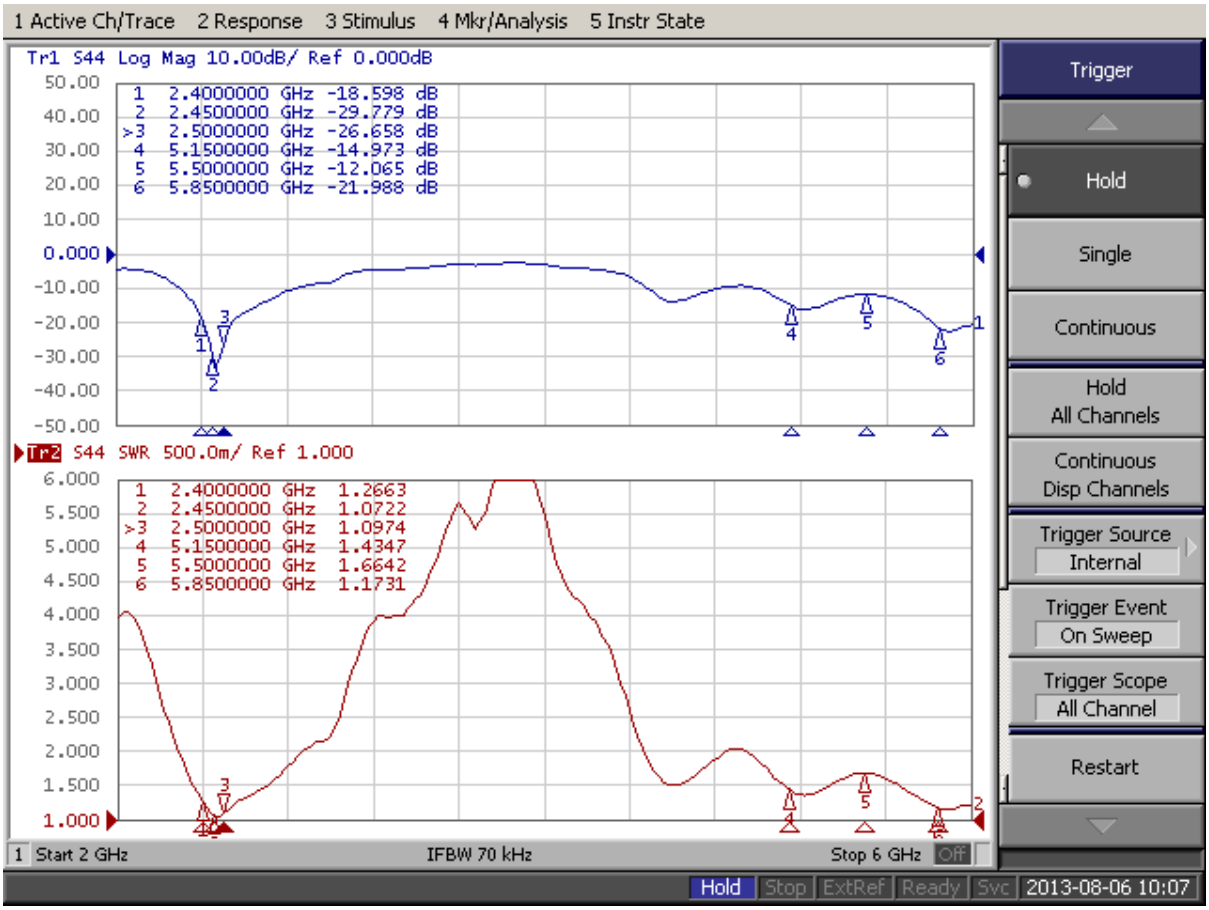


ADD：东莞市虎门镇大宁麒麟东路6号 Tel:15818375487

# 增益测试
# Gain Test

| | |
|---|---|
| ***Antenna Radiation Pattern VS Gain*** | 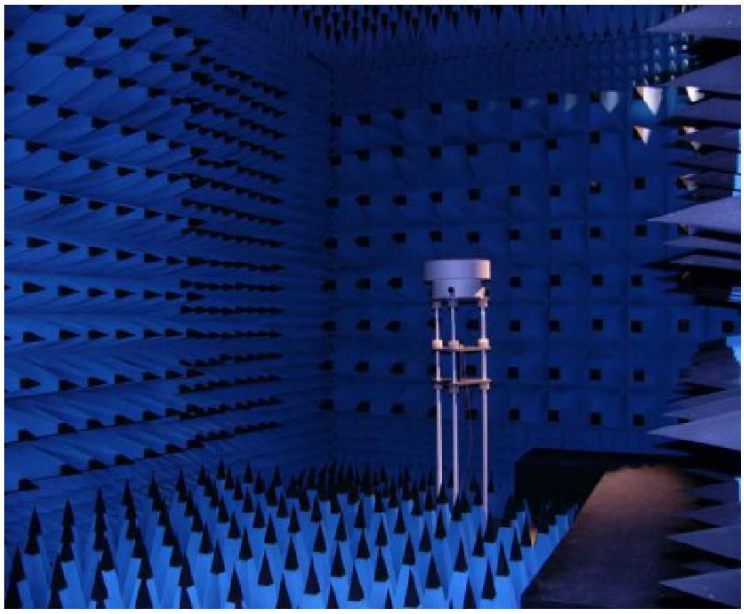 |
| | 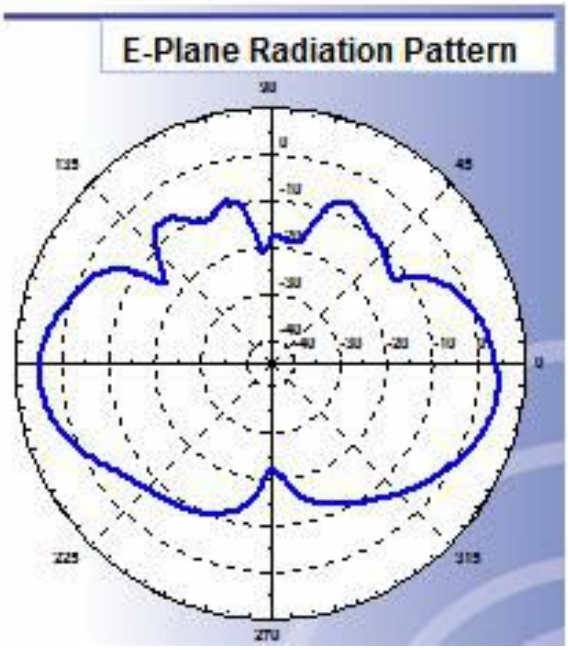 |

ADD：东莞市虎门镇大宁麒麟东路6号 Tel:15818375487