TEST REPORT

Report No.:	BCTC2407326662-6E
Applicant:	Shenzhen Qichang Intelligent Technology Co., Ltd
Product Name:	Smart phone
Test Model:	S2
Tested Date:	2024-07-15 to 2024-08-12
Issued Date:	2024-08-13

Shenzhen BCTC Testing Co., Ltd.

FCC ID: 2BAK2-S2

Product Name:	Smart phone
Trademark:	FOSSIBOT
Model/Type reference:	S2 S2 Pro, S2 Plus, S2 P, S2 +
Prepared For:	Shenzhen Qichang Intelligent Technology Co., Ltd
Address:	Room 510, Building 7, Yunli Intelligent Park, No. 7, Bantian Street, Longgang , Shenzhen
Manufacturer:	Shenzhen Qichang Intelligent Technology Co., Ltd
Address:	Room 510, Building 7, Yunli Intelligent Park, No. 7, Bantian Street, Longgang , Shenzhen
Prepared By:	Shenzhen BCTC Testing Co., Ltd.
Address:	1-2/F., Building B, Pengzhou Industrial Park, No.158, Fuyuan 1st Road, Zhancheng, Fuhai Subdistrict, Bao'an District, Shenzhen, Guangdong, China
Sample Received Date:	2024-07-15
Sample tested Date:	2024-07-15 to 2024-08-12
Issue Date:	2024-08-13
Report No.:	BCTC2407326662-6E
Test Standards:	FCC CFR Title 47 Part 2 FCC CFR Title 47 Part 22 FCC CFR Title 47 Part 24 FCC CFR Title 47 Part 27
Test Results:	PASS
Remark:	This is radio test report for 4G in US full bands.

Tested by:

Brave Zeng

Brave Zeng/ Project Handler

Approved by:

Zero Zhou/Reviewer

The test report is effective only with both signature and specialized stamp. This result(s) shown in this report refer only to the sample(s) tested. Without written approval of Shenzhen BCTC Testing Co., Ltd, this report can't be reproduced except in full. The tested sample(s) and the sample information are provided by the client.

Table Of Content

Test Report Declaration Page
1. Version 5
2. Test Summary 6
3. Measurement Uncertainty 7
4. Product Information And Test Setup 8
4.1 Product Information 8
4.2 Test Setup Configuration 9
4.2 Emission Designator 9
4.3 Description Operation Frequency 11
4.4 Test Mode 13
4.5 Support Equipment 16
4.6 Measurement Results Explanation Example 16
5. Test Facility And Test Instrument Used 17
5.1 Test Facility 17
5.2 Test Instrument Used 17
6. Effective Radiated Power and Effective Isotropic Radiated Power Measurement 18
6.1 Block Diagram Of Test Setup 18
6.2 Limit 20
6.3 Test procedure 20
6.4 Test Result 22
7. Peak-To-Average Ratio(PAR) Of Transmitter 23
7.1 Block Diagram Of Test Setup 23
7.2 Limit 23
7.3 Test procedure 23
7.4 Test Result 24
8. Emission Bandwidth 25
8.1 Block Diagram Of Test Setup 25
8.2 Standard Applicable 25
8.3 Test procedure 25
8.4 Test Result 25
9. Out of Band Emissions at Antenna Terminal 26
9.1 Block Diagram Of Test Setup 26
9.2 Limit 26
9.3 Test procedure 27
9.4 Test Result 27
10. Spurious Radiated Emissions 28
10.1 Block Diagram Of Test Setup 28
10.2 Limit 29
10.3 Test procedure 30
10.4 Test Result 31
11. Frequency Stability 34

11.1 Block Diagram Of Test Setup 34
11.2 Limit 34
11.3 Test procedure 34
11.4 Test Result 34
12. EUT Photographs 35
13. EUT Test Setup Photographs 36

(Note: N/A Means Not Applicable)

1. Version

Report No.	Issue Date	Description	Approved
BCTC2407326662-6E	2024-08-13	Original	Valid

2. Test Summary

The Product has been tested according to the following specifications:

No.	Test Parameter	Clause No.	Results
1	RF Exposure	§1.1307,§2.1093	PASS
2	RF Output Power	§2.1046; §22.913; §24.232(c); §27.50	PASS
3	Peak-to-average Ratio(PAR) of Transmitter	§2.1046; §24.232(d) §27.50	PASS
4	Emission Bandwidth	§2.1049; §24.238(b);§27.53;	PASS
5	Spurious Emissions at Antenna Terminal	§22.917 (a), §24.238 (a), §27.53,	PASS
6	Spurious Radiation Emissions	§2.1051; §22.917; §27.53; §24.238;	PASS
7	Out of Band Emissions	§2.1051; §22.917; §27.53; §24.238	PASS
8	Frequency Stability	§2.1055;§22.355; §27.54; §24.235;	PASS

3. Measurement Uncertainty

The reported uncertainty of measurement y ± U, where expended uncertainty U is based on a standard uncertainty multiplied by a coverage factor of k=2, providing a level of confidence of approximately 95 %.

No.	Item	Uncertainty
1	3m chamber Radiated spurious emission(30MHz-1GHz)	U=4.3dB
2	3m chamber Radiated spurious emission(9KHz-30MHz)	U=3.7dB
3	3m chamber Radiated spurious emission(1GHz-18GHz)	U=4.5dB
4	3m chamber Radiated spurious emission(18GHz-40GHz)	U=3.34dB
5	Conducted Emission (150kHz-30MHz)	U=3.20dB
6	Conducted Adjacent channel power	U=1.38dB
7	Conducted output power uncertainty Above 1G	U=1.576dB
8	Conducted output power uncertainty below 1G	U=1.28dB
9	humidity uncertainty	U=5.3%
10	Temperature uncertainty	U=0.59℃

4. Product Information And Test Setup

4.1 Product Information

Model/Type reference:	S2 S2 Pro, S2 Plus, S2 P, S2 +
Model differences:	All the model are the same circuit and RF module, except model names.
Hardware Version:	LV998S_MB_V2.0
Software Version:	FOSSiBOT_S2_F
Tx Frequency:	LTE Band 2: 1850 MHz ~ 1910 MHz LTE Band 4: 1710 MHz ~ 1755 MHz LTE Band 5: 824 MHz ~ 849 MHz LTE Band 7: 2500MHz-2570MHz LTE Band 12: 699 MHz ~ 716 MHz LTE Band 17: 704MHz-716MHz
Rx Frequency:	LTE Band 2: 1930 MHz ~ 1990 MHz LTE Band 4: 2110 MHz ~ 2155 MHz LTE Band 5: 869 MHz ~ 894 MHz LTE Band 7: 2620MHz-2690MHz LTE Band 12: 729 MHz ~ 746 MHz LTE Band 17: 734MHz-746MHz
Bandwidth:	LTE Band 2: 1.4MHz /3MHz /5MHz /10MHz /15MHz /20MHz LTE Band 4: 1.4MHz /3MHz /5MHz /10MHz /15MHz /20MHz LTE Band 5: 1.4MHz /3MHz /5MHz /10MHz LTE Band 7: 5MHz /10MHz /15MHz /20MHz LTE Band 12: 1.4MHz /3MHz /5MHz /10MHz LTE Band 17: 5MHz /10MHz
The Max RF Output Power (EIRP/ERP)	LTE Band 2: 24.36 dBm LTE Band 4: 23.64 dBm LTE Band 5: 19.76 dBm LTE Band 7: 21.65 dBm LTE Band 12: 19.08 dBm LTE Band 17: 18.85 dBm
99% Occupied Bandwidth:	LTE Band 2: 18M0G7D LTE Band 4: 18M0G7D LTE Band 5: 9M05W7D LTE Band 7: 18M1G7D LTE Band 12: 9M02W7D LTE Band 17: 8M96W7D
Type of Modulation:	QPSK/16QAM
Antenna Type:	Internal Antenna
Antenna Gain:	LTE Band 2: 1.07 dBi LTE Band 4: 0.34 dBi LTE Band 5: -2.46 dBi LTE Band 7: -0.54 dBi LTE Band 12: -2.67 dBi LTE Band 17: -2.67 dBi Remark: ☐ The antenna gain of the product comes from the antenna report provided by the customer, and the test data is affected by the customer information. ☒ The antenna gain of the product is provided by the customer, and the test data is affected by the customer information.
Connecting I/O Port(s):	Please refer to the User's Manual

Ratings: DC 9V from adapter/DC 3.87V from battery

Adapter Information: Model: TPA-10S120150UU01
Input: 100-240V- 50/60Hz 0.6A
Output: 3.6-6V ⎓ 3A/6-9V ⎓ 2A/9-12V ⎓ 1.5A

4.2 Test Setup Configuration

See test photographs attached in *EUT TEST SETUP PHOTOGRAPHS* for the actual connections between Product and support equipment.

4.2 Emission Designator

LTE Band 2	QPSK		16QAM	
BW(MHz)	**Emission Designator (99%OBW)**	**Maximum EIRP(W)**	**Emission Designator (99%OBW)**	**Maximum EIRP(W)**
1.4	1M10G7D	0.251	1M10W7D	0.200
3	2M70G7D	0.273	2M70W7D	0.233
5	4M53G7D	0.270	4M51W7D	0.240
10	9M01G7D	0.252	9M02W7D	0.221
15	13M5G7D	0.262	13M5W7D	0.224
20	18M0G7D	0.245	18M1W7D	0.212

LTE Band 4	QPSK		16QAM	
BW(MHz)	Emission Designator (99%OBW)	Maximum EIRP(W)	Emission Designator (99%OBW)	Maximum EIRP(W)
1.4	1M11G7D	0.221	1M10W7D	0.182
3	2M70G7D	0.226	2M70W7D	0.207
5	4M51G7D	0.231	4M52W7D	0.207
10	8M98G7D	0.224	8M99W7D	0.191
15	13M5G7D	0.228	13M5W7D	0.198
20	18M0G7D	0.223	18M0W7D	0.191

LTE Band 5	QPSK		16QAM	
BW(MHz)	Emission Designator (99%OBW)	Maximum ERP(W)	Emission Designator (99%OBW)	Maximum ERP(W)
1.4	1M10G7D	0.092	1M10W7D	0.075
3	2M70G7D	0.095	2M69W7D	0.081
5	4M51G7D	0.094	4M51W7D	0.081
10	9M04G7D	0.093	9M05W7D	0.079

LTE Band 7	QPSK		16QAM	
BW(MHz)	Emission Designator (99%OBW)	Maximum ERP(W)	Emission Designator (99%OBW)	Maximum ERP(W)
5	4M51G7D	0.146	4M52W7D	0.130
10	8M99G7D	0.141	9M00W7D	0.121
15	13M5G7D	0.146	13M5W7D	0.119
20	18M1G7D	0.141	18M0W7D	0.121

LTE Band 12	QPSK		16QAM	
BW(MHz)	Emission Designator (99%OBW)	Maximum ERP(W)	Emission Designator (99%OBW)	Maximum ERP(W)
1.4	1M10G7D	0.076	1M10W7D	0.062
3	2M70G7D	0.081	2M69W7D	0.069
5	4M54G7D	0.078	4M53W7D	0.071
10	9M01G7D	0.077	9M02W7D	0.066

LTE Band 17	QPSK		16QAM	
BW(MHz)	Emission Designator (99%OBW)	Maximum ERP(W)	Emission Designator (99%OBW)	Maximum ERP(W)
5	4M55G7D	0.077	4M57W7D	0.069
10	8M95G7D	0.067	8M96W7D	0.058

4.3 Description Operation Frequency

LTE Band 2(1.4MHz)		LTE Band 2(3MHz)	
Channel	**Frequency (MHz)**	**Channel**	**Frequency (MHz)**
18607	1850.7	18615	1851.5
18900	1880	18900	1880
19193	1909.3	19185	1908.5
LTE Band 2(5MHz)		**LTE Band 2(10MHz)**	
Channel	**Frequency (MHz)**	**Channel**	**Frequency (MHz)**
18625	1852.5	18650	1855
18900	1880	18900	1880
19175	1907.5	19150	1905
LTE Band 2(15MHz)		**LTE Band 2(20MHz)**	
Channel	**Frequency (MHz)**	**Channel**	**Frequency (MHz)**
18675	1857.5	18700	1860
18900	1880	18900	1880
19125	1902.5	19100	1900

LTE Band 4(1.4MHz)		LTE Band 4(3MHz)	
Channel	**Frequency (MHz)**	**Channel**	**Frequency (MHz)**
19957	1710.7	19965	1711.5
20175	1732.5	20175	1732.5
20393	1754.3	20385	1753.5
LTE Band 4(5MHz)		**LTE Band 4(10MHz)**	
Channel	**Frequency (MHz)**	**Channel**	**Frequency (MHz)**
19975	1712.5	20000	1715
20175	1732.5	20175	1732.5
20375	1752.5	20350	1750
LTE Band 4(15MHz)		**LTE Band 4(20MHz)**	
Channel	**Frequency (MHz)**	**Channel**	**Frequency (MHz)**
20025	1717.5	20050	1720
20175	1732.5	20175	1732.5
20325	1747.5	20300	1745

LTE Band 5(1.4MHz)		LTE Band 5(3MHz)	
Channel	**Frequency (MHz)**	**Channel**	**Frequency (MHz)**
20407	824.7	20415	825.5
20525	836.5	20525	836.5
20643	848.3	20635	847.5
LTE Band 5(5MHz)		**LTE Band 5(10MHz)**	
Channel	**Frequency (MHz)**	**Channel**	**Frequency (MHz)**
20425	826.5	20450	829
20525	836.5	20525	836.5
20625	846.5	20600	844

LTE Band 7(5MHz)		LTE Band 7(10MHz)	
Channel	**Frequency (MHz)**	**Channel**	**Frequency (MHz)**
20775	2502.5	20800	2505
21100	2535	21100	2535
21425	2567.5	21400	2565
LTE Band 7(15MHz)		**LTE Band 7(20MHz)**	
Channel	**Frequency (MHz)**	**Channel**	**Frequency (MHz)**
20825	2507.5	20850	2510
21100	2535	21100	2535
21375	2562.5	21350	2560

LTE Band 12(1.4MHz)		LTE Band 12(3MHz)	
Channel	**Frequency (MHz)**	**Channel**	**Frequency (MHz)**
23017	699.7	23025	700.5
23095	707.5	23095	707.5
23173	715.3	23165	714.5
LTE Band 12(5MHz)		**LTE Band 12(10MHz)**	
Channel	**Frequency (MHz)**	**Channel**	**Frequency (MHz)**
23035	701.5	23060	704
23095	707.5	23095	707.5
23155	713.5	23130	711

LTE Band 17(5MHz)		LTE Band 17(10MHz)	
Channel	**Frequency (MHz)**	**Channel**	**Frequency (MHz)**
23755	706.5	23780	709
23790	710	23790	710
23825	713.5	23800	711

4.4 Test Mode

Test modes are chosen to be reported as the worst case configuration below:

Test Mode		
Band	**Radiated TCs**	**Conducted TCs**
LTE Band 2	QPSK Link (1.4MHz / 3MHz / 5MHz / 10MHz / 15MHz / 20MHz)	16QAM Link (1.4MHz / 3MHz / 5MHz / 10MHz / 15MHz / 20MHz)
LTE Band 4	QPSK Link (1.4MHz / 3MHz / 5MHz / 10MHz / 15MHz / 20MHz)	16QAM Link (1.4MHz / 3MHz / 5MHz / 10MHz / 15MHz / 20MHz)
LTE Band 5	QPSK Link (1.4MHz / 3MHz / 5MHz / 10MHz)	16QAM Link (1.4MHz / 3MHz / 5MHz / 10MHz)
LTE Band 7	QPSK Link (5MHz /10MHz / 15MHz / 20MHz)	16QAM Link (5MHz /10MHz / 15MHz / 20MHz)
LTE Band 12	QPSK Link (1.4MHz / 3MHz / 5MHz / 10MHz)	16QAM Link (1.4MHz / 3MHz / 5MHz / 10MHz)
LTE Band 17	QPSK Link (5MHz /10MHz)	16QAM Link (5MHz /10MHz)
Note 1: All modes and data rates and positions were investigated. Note 2: Both the SIM 1 and SIM 2 were tested, the worst mode is the SIM 1, the data recording in the report.		

Antenna port conducted and radiated test items were performed according to KDB 971168 D01 Power Meas License Digital Systems v03 with maximum output power.

EUT Cable List and Details

Cable Description	Length (M)	Shielded/Unshielded	With Core/ Without Core
/	/	/	/
/	/	/	/

Auxiliary Equipment List and Details

Description	Manufacturer	Model	Serial Number
/	/	/	/

Special Cable List and Details

Cable Description	Length (M)	Shielded/Unshielded	With Core/ Without Core
/	/	/	/

Radiated measurements were performed with rotating EUT in different three orthogonal test planes to find the maximum emission.

Test Items	Band	Bandwidth (MHz)						Modulation		RB #			Test Channel		
		1.4	3	5	10	15	20	QPSK	16QAM	1	Half	Full	L	M	H
Max.Output Power	2	v	v	v	v	v	v	v	v	v	v	v	v	v	v
	4	v	v	v	v	v	v	v	v	v	v	v	v	v	v
	5	v	v	v	v	-	-	v	v	v	v	v	v	v	v
	7	-	-	v	v	v	v	v	v	v	v	v	v	v	v
	12	v	v	v	v	-	-	v	v	v	v	v	v	v	v
	17	-	-	v	v	-	-	v	v	v	v	v	v	v	v
Peak-to-Average Ratio	2	v	v	v	v	v	v	v	v	v	v	v	v	v	v
	4	v	v	v	v	v	v	v	v	v	v	v	v	v	v
	5	v	v	v	v	-	-	v	v	v	v	v	v	v	v
	7			v	v	v	v	v	v	v	v	v	v	v	v
	12	v	v	v	v	-	-	v	v	v	v	v	v	v	v
	17			v	v			v	v	v	v	v	v	v	v
26dB and 99% Bandwidth	2	v	v	v	v	v	v	v	v	v	v	v	v	v	v
	4	v	v	v	v	v	v	v	v	v	v	v	v	v	v
	5	v	v	v	v	-	-	v	v	v	v	v	v	v	v
	7			v	v	v	v	v	v	v	v	v	v	v	v
	12	v	v	v	v	-	-	v	v	v	v	v	v	v	v
	17	-	-	v	v	-	-	v	v	v	v	v	v	v	v
Conducted Band Edge	2	v	v	v	v	v	v	v	v	v	v	v	v	-	v
	4	v	v	v	v	v	v	v	v	v	v	v	v	-	v
	5	v	v	v	v	-	-	v	v	v	v	v	v	-	v
	7			v	v	v	v	v	v	v	v	v	v	v	v
	12	v	v	v	v	-	-	v	v	v	v	v	v	v	v
	17			v	v			v	v	v	v	v	v	v	v
Conducted Spurious Emission	2	v	v	v	v	v	v	v	v	v	-	-	v	v	v
	4	v	v	v	v	v	v	v	v	v	-	-	v	v	v
	5	v	v	v	v	-	-	v	v	v	-	-	v	v	v
	7			v	v	v	v	v	v	v	v	v	v	v	v
	12	v	v	v	v	-	-	v	v	v	v	v	v	v	v
	17			v	v			v	v	v	v	v	v	v	v
Frequency tability	2	v	-	-	-	-	-	v	v	v	-	-	v	v	v
	4	v	-	-	-	-	-	v	v	v	-	-	v	v	v
	5	v	-	-	-	-	-	v	v	v	-	-	v	v	v
	7	v						v	v	v	-	-	v	v	v

	12	**v**	**-**	**-**	**-**	**-**	**-**	**v**	**v**	**v**	**-**	**-**	**v**	**v**	**v**
	17	**v**						**v**	**v**	**v**	**-**	**-**	**v**	**v**	**v**
E.R.P./ E.I.R.P.	2	v	v	v	v	v	v	v	v	v	v	v	v	v	v
	4	**v**	**v**	**v**	**v**	**v**	**v**	**v**	**v**	**v**	**v**	**v**	**v**	**v**	**v**
	5	**v**	**v**	**v**	**v**	**-**	**-**	**v**	**v**	**v**	**v**	**v**	**v**	**v**	**v**
	7			**v**	**v**			**v**	**v**	**v**	**v**	**v**	**v**	**v**	**v**
	12	**v**	**v**	**v**	**v**	**-**	**-**	**v**	**v**	**v**	**v**	**v**	**v**	**v**	**v**
	17	**-**	**-**	**v**	**v**	**-**	**-**	**v**	**v**	**v**	**v**	**v**	**v**	**v**	**v**
Radiated Spurious Emission	2	v	-	-	-	-	-	v	v	v	-	-	v	v	v
	4	**v**	**-**	**-**	**-**	**-**	**-**	**v**	**v**	**v**	**-**	**-**	**v**	**v**	**v**
	5	**v**	**-**	**-**	**-**	**-**	**-**	**v**	**v**	**v**	**-**	**-**	**v**	**v**	**v**
	7	**v**						**v**	**v**	**v**			**v**	**v**	**v**
	12	**v**	**-**	**-**	**-**	**-**	**-**	**v**	**v**	**v**	**-**	**-**	**v**	**v**	**v**
	17	**v**						**v**	**v**	**v**			**v**	**v**	**v**
Note	1.The mark “v “ means that this configuration is chosen for testing 2.The mark “-“ means that this bandwidth is not supported.														

4.5 Support Equipment

No.	Device Type	Brand	Model	Series No.	Note
E-1	Smart phone	FOSSIBOT	S2	N/A	EUT
E-2	Adapter	N/A	TPA-10S120 150UU01	N/A	Auxiliary

Item	Shielded Type	Ferrite Core	Length	Note
C-1	N/A	N/A	1M	DC cable unshielded

Notes:
1. All the equipment/cables were placed in the worst-case configuration to maximize the emission during the test.
2. Grounding was established in accordance with the manufacturer's requirements and conditions for the intended use.

4.6 Measurement Results Explanation Example

For all conducted test items:
The offset level is set in the spectrum analyzer to compensate the RF cable loss and attenuator factor between RF conducted output port and spectrum analyzer. With the offset compensation, the spectrum analyzer reading level will be exactly the RF output level. The spectrum analyzer offset is derived from RF cable loss and attenuator factor. Offset = RF cable loss + attenuator factor.

5. Test Facility And Test Instrument Used

5.1 Test Facility

All measurement facilities used to collect the measurement data are located at Shenzhen BCTC Testing Co., Ltd. Address: 1-2/F., Building B, Pengzhou Industrial Park, No.158, Fuyuan 1st Road, Zhancheng, Fuhai Subdistrict, Bao'an District, Shenzhen, Guangdong, China. The site and apparatus are constructed in conformance with the requirements of ANSI C63.4 and CISPR 16-1-1 other equivalent standards.
FCC Test Firm Registration Number: 712850
A2LA certificate registration number is: CN1212
ISED Registered No.: 23583
ISED CAB identifier: CN0017

5.2 Test Instrument Used

RF Conducted Test					
Equipment	**Manufacturer**	**Model#**	**Serial#**	**Last Cal.**	**Next Cal.**
Power meter	Keysight	E4419	\	May 16, 2024	May 15, 2025
Power Sensor (AV)	Keysight	E9300A	\	May 16, 2024	May 15, 2025
Signal Analyzer20kHz-26.5GHz	Keysight	N9020A	MY49100060	May 16, 2024	May 15, 2025
Spectrum Analyzer9kHz-40GHz	R&S	FSP40	100363	May 16, 2024	May 15, 2025
Communication test set	R&S	CMW500	126173	Nov. 13. 2023	Nov. 12, 2024
Radio frequency control box	MAIWEI	MW200-RFCB	\	\	\
Software	MAIWEI	MTS 8200	\	\	\

6. Effective Radiated Power and Effective Isotropic Radiated Power Measurement

6.1 Block Diagram Of Test Setup

Conducted output power test method:

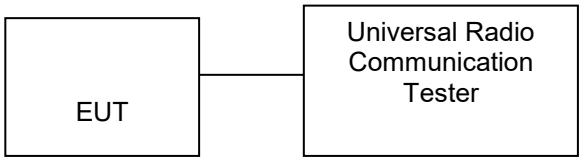

Radiated power test method:
（A）Radiated Emission Test-Up Frequency Below 30MHz

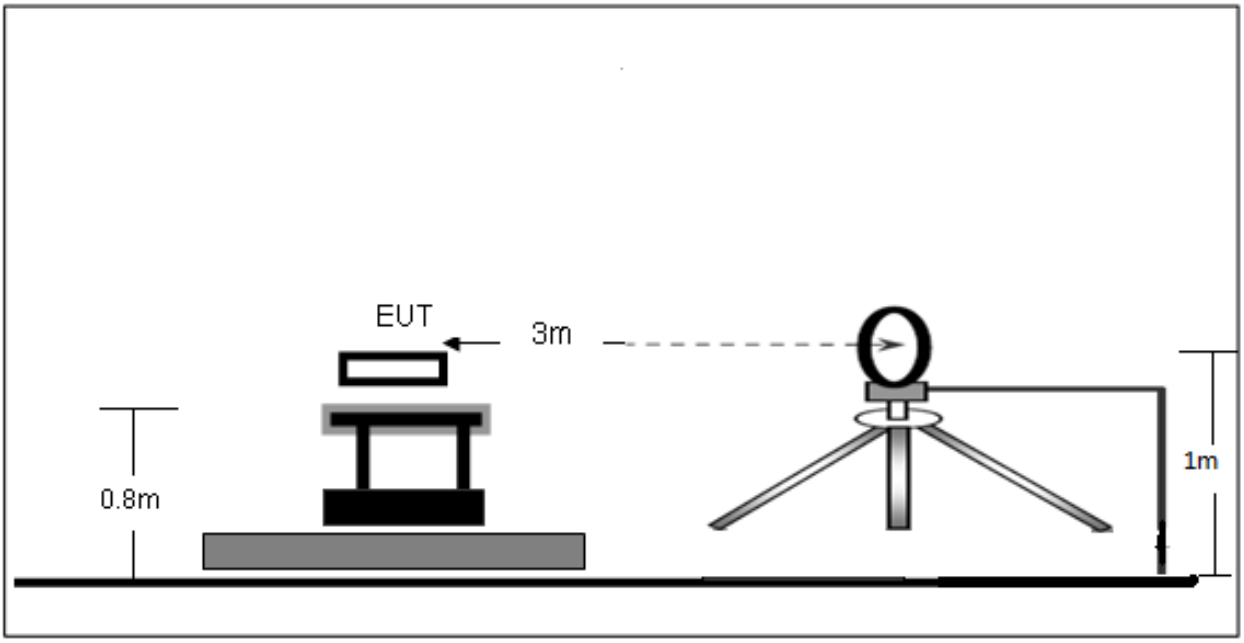

（B）Radiated Emission Test-Up Frequency 30MHz~1GHz

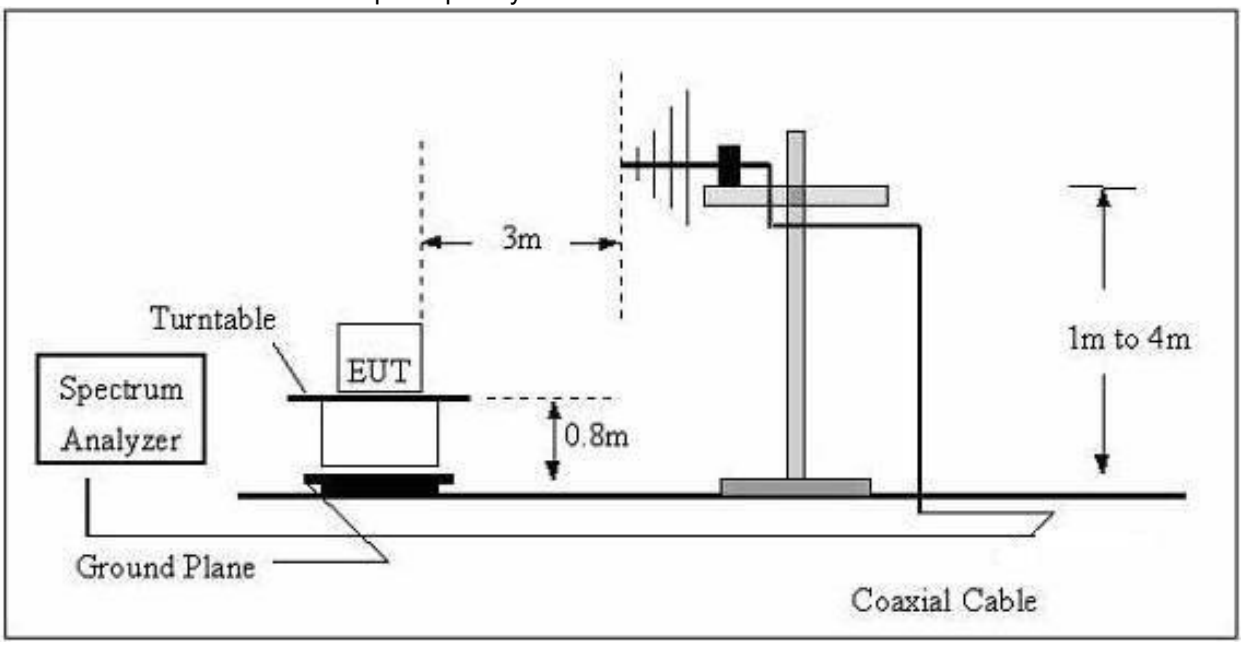

（C）Radiated Emission Test-Up Frequency Above 1GHz

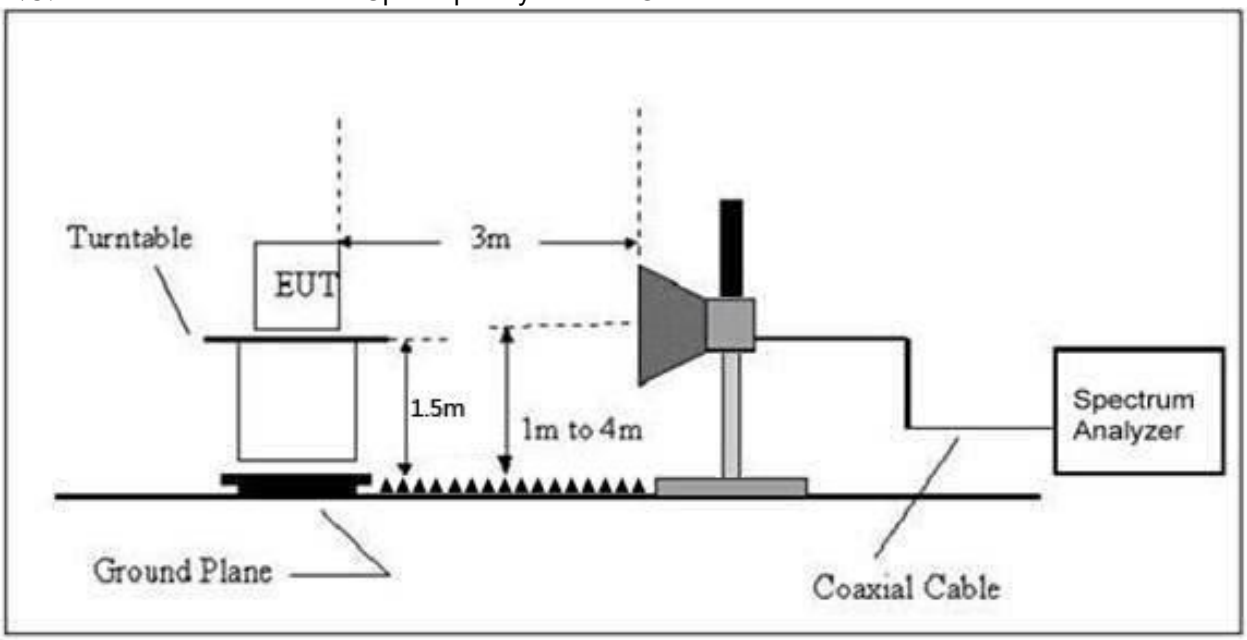

6.2 Limit

According to FCC section 22.913(a) (5), the Effective Radiated Power (ERP) of mobile transmitters and auxiliary test transmitters must not exceed 7 watts.

According to FCC section 24.232(c), mobile and portable stations are limited to 2 watts EIRP and the equipment must employ a means for limiting power to the minimum necessary for successful communications.

According to FCC section 27.50(a) (3), for mobile and portable stations transmitting in the 2305-2315MHz band or the 2350-2360MHz band, the average EIRP must not exceed 50 milliwatts within any 1 megahertz of authorized bandwidth, except that for mobile and portable stations compliant with 3GPP LTE standards.

FCC section 27.50(b) (10), portable stations (hand-held devices) transmitting in the 746-757MHz, 776-788MHz, and 805-806MHz bands are limited to 3 watts ERP.

FCC section 27.50(c) (10), portable stations (hand-held devices) in the 600MHz uplink band and the 698-746MHz band, and fixed and mobile stations in the 600MHz uplink band are limited to 3 watts ERP.

FCC section 27.50(d) (4), fixed, mobile, and portable (hand-held) stations operating in the 1710-1755 MHz band and mobile and portable stations operating in the 1695-1710 MHz and 1755-1780 MHz bands are limited to 1 watt EIRP. Fixed stations operating in the 1710-1755 MHz band are limited to a maximum antenna height of 10 meters above ground. Mobile and portable stations operating in these bands must employ a means for limiting power to the minimum necessary for successful communications.

(7) Fixed, mobile, and portable (hand-held) stations operating in the 2000-2020 MHz band are limited to 2 watts EIRP.

And FCC section 27.50(h) (2), for mobile and other user stations, mobile stations are limited to 2.0 watts EIRP. All user stations are limited to 2.0 watts transmitter output power.

6.3 Test procedure

Description of the Conducted Output Power Measurement

The EUT is coupled to the SS with attenuator through power splitter; the RF load attached to EUT antenna terminal is 50Ohm; the path loss as the factor is calibrated to correct the reading. A system simulator is used to establish communication with the EUT, and its parameters are set to force the EUT transmitting at maximum output power. The measured power in the radio frequency on the transmitter output terminals shall be reported.

The relevant equation for determining the conducted measured value is:

Conducted Output Power Value (dBm) = Measured Value (dBm) + Path Loss (dB)

where:
Conducted Output Power Value = final conducted measured value in the conducted power test, in dBm;
Measured Value = measured conducted power received by spectrum analyzer or power meter, in dBm;
Path Loss = signal attenuation in the connecting cable between the transmitter and spectrum analyzer or power meter, including external cable loss, in dB;

During the test, the data of Path Loss (dB) is added in the spectrum analyzer or power meter, so Measured Value (dBm) is the final values which contains the data of Path Loss (dB).

For example:

In the conducted output power test, when measured value for GSM850 is 24.7 dBm, and path loss is 8.5 dB, then final conducted output power value is:
Conducted Output Power Value (dBm) = 24.7 dBm + 8.5 dB = 33.2 dBm

Description of the Transmitter Radiated Power Measurement

In many cases, the RF output power limits for licensed digital transmission devices is specified in terms of effective radiated power (ERP) or equivalent isotropic radiated power (EIRP). Typically, ERP is specified when the operating frequency is less than or equal to 1 GHz and EIRP is specified when the operating frequency is greater than 1 GHz. Both are determined by adding the transmit antenna gain to the conducted RF output power with the primary difference between the two being that when determining the ERP, the transmit antenna gain is referenced to a dipole antenna (i.e., dBd) whereas when determining the EIRP, the transmit antenna gain is referenced to an isotropic antenna (dBi).

Final measurement calculation as below:

The relevant equation for determining the ERP or EIRP from the conducted RF output power measured using the guidance provided above is:
ERP/EIRP = PMeas + GT − LC

where:
ERP/EIRP = effective or equivalent radiated power, respectively (expressed in the same units as PMeas, typically dBW or dBm);

PMeas = measured transmitter output power or PSD, in dBm or dBW; GT = gain of the transmitting antenna, in dBd (ERP) or dBi (EIRP); dBd (ERP)=dBi (EIRP) -2.15 dB
LC = signal attenuation in the connecting cable between the transmitter and antenna, in dB.

For devices utilizing multiple antennas, KDB 662911 provides guidance for determining the effective array transmit antenna gain term to be used in the above equation.

For example:
In the EIRP test, when PMeas value for GSM1900 is 30.2 dBm, LC is 0.6 dB, and GT is -3.4 dB, then final EIRP value is:
EIRP for GSM1900 = 30.2 dBm - 3.4 dBi - 0.6 dB = 26.2 dBm

The relevant equation for determining the ERP/EIRP from the radiated RF output power is:

ERP/EIRP (dBm) = SA Read Value (dBm) + Correction Factor (dB)

where:
ERP/EIRP = effective or equivalent radiated power, in dBm;
SA Read Value = measured transmitter power received by EMI receiver or spectrum analyzer, in dBm;
Correction Factor = total correction factor including cable loss, in dB;

During the test, the data of Correction Factor (dB) is added in the EMI receiver or spectrum analyzer, so SA Read Value (dBm) is the final values which contains the data of Correction Factor (dB).

For example:

In the ERP test, when SA read value for GSM850 is 21dBm, and correction factor is 8dB, then final ERP value for GSM850 is:
ERP (dBm) = 21dBm + 8dB = 29dBm

6.4 Test Result

Please refer to appendix 1.
Test Result: Pass

7. Peak-To-Average Ratio(PAR) Of Transmitter

7.1 Block Diagram Of Test Setup

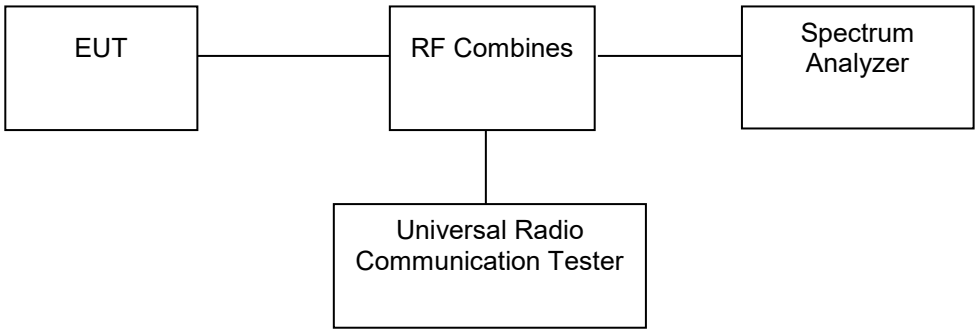

7.2 Limit

FCC § 2.1046 & 24.232(d) & 27.50(d)

In addition, when the transmitter power is measured in terms of average value, the peak-to-average power ratio (PAPR) of the transmitter shall not exceed 13 dB for more than 0.1% of the time using a signal corresponding to the highest PAPR during periods of continuous transmission.

According to FCC section 24.232(d), power measurements for transmissions by stations authorized under this section may be made either in accordance with a Commission-approved average power technique or in compliance with 24.232 (e) of this section. In both instances, equipment employed must be authorized in accordance with the provisions of § 24.51. In measuring transmissions in this band using an average power technique, the peak-to-average ratio (PAR) of the transmission may not exceed 13 dB.

FCC section 24.232(e), peak transmit power must be measured over any interval of continuous transmission using instrumentation calibrated in terms of an rms equivalent voltage. The measurement results shall be properly adjusted for any instrument limitations, such as detector response times, limited resolution bandwidth capability when compared to the emission bandwidth, sensitivity, etc., so as to obtain a true peak measurement for the emission in question over the full bandwidth of the channel.

According to FCC section 27.50(d) (5); in measuring transmissions in this band using an average power technique, the peak-to-average ratio (PAR) of the transmission may not exceed 13dB.

7.3 Test procedure

Here the lowest, middle and highest channels are selected to perform testing to verify the peak-to-average ratio.
According to KDB 971168 D01, there is CCDF procedure for PAPR:

Refer to instrument's analyzer instruction manual for details on how to use the power statistics/CCDF function;

Set resolution/measurement bandwidth ⩾ signal's occupied bandwidth;

Set the number of counts to a value that stabilizes the measured CCDF curve;

Set the measurement interval as follows:

1)for continuous transmissions, set to 1 ms,
2)for burst transmissions, employ an external trigger that is synchronized with the EUT burst timing sequence, or use the internal burst trigger with a trigger level that allows the burst to stabilize and set the measurement interval to a time that is less than or equal to the burst duration.

Record the maximum PAPR level associated with a probability of 0.1%.

Alternate procedure for PAPR:

Use one of the procedures presented in 4.1 to measure the total peak power and record as PPk. Use one of the applicable procedures presented 4.2 to measure the total average power and record as PAvg. Both the peak and average power levels must be expressed in the same logarithmic units (e.g., dBm). Determine the PAPR from:

PAPR (dB) = PPk (dBm) - PAvg (dBm).

7.4 Test Result

Please refer to Appendix 3: Peak-to-Average Ratio
Test Result: Pass

8. Emission Bandwidth

8.1 Block Diagram Of Test Setup

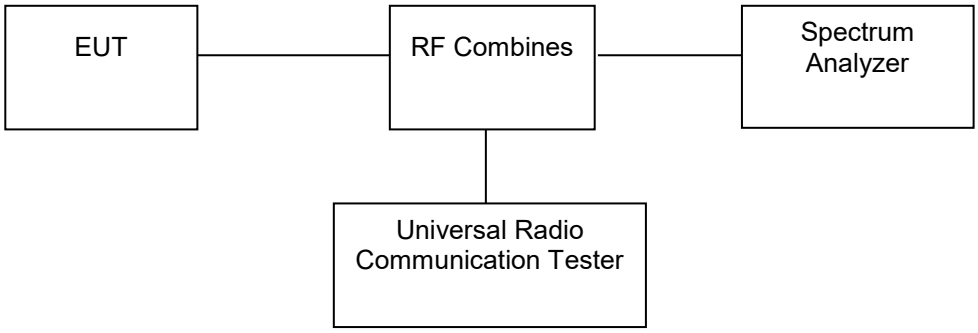

8.2 Standard Applicable

According to §22.917(b),The emission bandwidth is defined as the width of the signal between two points, one below the carrier center frequency and one above the carrier center frequency, outside of which all emissions are attenuated at least 26 dB below the transmitter power.

According to §24.238(b), The emission bandwidth is defined as the width of the signal between two points, one below the carrier center frequency and one above the carrier center frequency, outside of which all emissions are attenuated at least 26 dB below the transmitter power.

According to §27.53, The emission bandwidth is defined as the width of the signal between two points, one below the carrier center frequency and one above the carrier center frequency, outside of which all emissions are attenuated at least 26 dB below the transmitter power.

8.3 Test procedure

1. The testing follows FCC KDB 971168 D01v03 Section 4.2.
2. The EUT was connected to the spectrum analyzer and system simulator via a power divider.
3. The RF output of the EUT was connected to the spectrum analyzer by RF cable and attenuator.The path loss was compensated to the results for each measurement.
4. The 99% occupied bandwidth were measured, set RBW= 1% of OBW, VBW= 3*RBW, sample detector, trace maximum hold.
5. The 26dB bandwidth were measured, set RBW= 1% of EBW, VBW= 3*RBW, peak detector, trace maximum hold.

8.4 Test Result

Please refer to Appendix 4: Occupied BandWidth
Test Result: Pass

9. Out of Band Emissions at Antenna Terminal

9.1 Block Diagram Of Test Setup

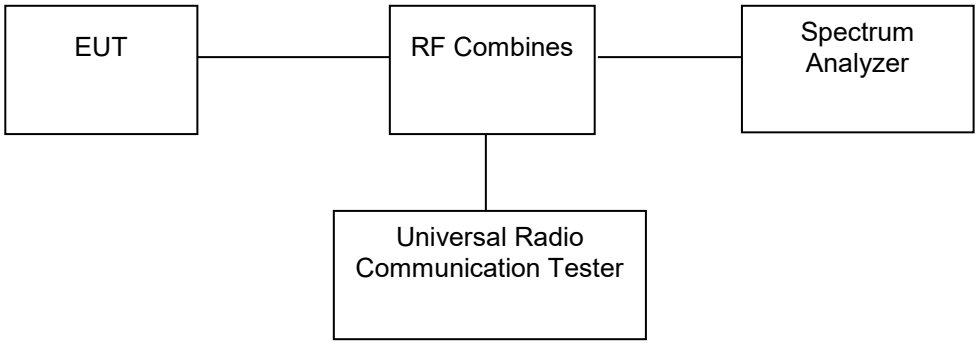

9.2 Limit

FCC § 2.1051 & 22.917(a) & 24.238(a) & 27.53(a) & 27.53(c) & 27.53(f) & 27.53(g) & 27.53(h) & 27.53(m) ;

In the 1 MHz bands immediately outside and adjacent to the frequency block, a resolution bandwidth of at least one percent of the emission bandwidth of the fundamental emission of the transmitter may be employed.

The emission bandwidth is defined as the width of the signal between two points, one below the carrier center frequency and one above the carrier center frequency, outside of which all emissions are attenuated at least 26 dB below the transmitter power.

FCC § 22.917(a) & 24.238(a)
The power of any emission outside of the authorized operating frequency ranges must be attenuated below the transmitting power (P) by a factor of at least 43+10*log(P) dB. This is calculated to be -13 dBm.

FCC § 27.53(c)

For operations in the 746–758 MHz band and the 776–788 MHz band, the power of any emission outside the licensee's frequency band(s) of operation shall be attenuated below the transmitter power (P) within the licensed band(s) of operation, measured in watts, in accordance with the following:
(1) On any frequency outside the 746–758 MHz band, the power of any emission shall be attenuated outside the band below the transmitter power (P) by at least 43 + 10 log (P) dB;
(2) On any frequency outside the 776–788 MHz band, the power of any emission shall be attenuated outside the band below the transmitter power (P) by at least 43 + 10 log (P) dB;
(3) On all frequencies between 763–775 MHz and 793–805 MHz, by a factor not less than 76 + 10 log (P) dB in a
6.25 kHz band segment, for base and fixed stations;
(4) On all frequencies between 763–775 MHz and 793–805 MHz, by a factor not less than 65 + 10 log (P) dB in a
6.25 kHz band segment, for mobile and portable stations;

(5) Compliance with the provisions of paragraphs (c)(1) and (c)(2) of this section is based on the use of measurement instrumentation employing a resolution bandwidth of 100 kHz or greater.
However, in the 100 kHz bands immediately outside and adjacent to the frequency block, a resolution bandwidth of at least 30 kHz may be employed;

(6) Compliance with the provisions of paragraphs (c)(3) and (c)(4) of this section is based on the use of measurement instrumentation such that the reading taken with any resolution bandwidth setting should be adjusted to indicate spectral energy in a 6.25 kHz segment.

FCC § 27.53(g)

For operations in the 600MHz band and the 698-746MHz band, the power of any emission outside a licensee's frequency band(s) of operation shall be attenuated below the transmitter power (P) within the licensed band(s) of operation, measured in watts, by at least 43+10*log(P) dB. Compliance with this provision is based on the use of measurement instrumentation employing a resolution bandwidth of 100 kHz bands immediately outside and adjacent to a licensee's frequency block, a resolution bandwidth of at least 30 kHz may be employed.

FCC § 27.53(h) (1)

Except as otherwise specified below, for operations in the 1695-1710 MHz, 1710-1755 MHz, 1755-1780 MHz, 1915-1920 MHz, 1995-2000 MHz, 2000-2020 MHz, 2110-2155 MHz, 2155-2180 MHz, and 2180-2200 bands,
the power of any emission outside a licensee's frequency block shall be attenuated below the transmitter power
(P) in watts by at least 43 + 10 log10 (P) dB.

FCC § 27.53(m) (4)
For mobile digital stations (BRS and EBS stations), the attenuation factor shall be not less than:

•40+10logP dB (−10 dBm, 100 nW) on all frequencies between the channel edge and 5 MHz from the channel edge.
•43+10logP dB (−13 dBm, 50 nW) on all frequencies between 5 MHz and X MHz from the channel edge,
•55+10logP dB (−25 dBm, 3 nW) on all frequencies more than X MHz from the channel edge, where X is the greater of 6 MHz or the actual emission bandwidth (26 dB).

In addition, the attenuation factor shall not be less that 43 + 10 log (P) dB on all frequencies between 2490.5 MHz and 2496 MHz and 55 + 10 log (P) dB at or below 2490.5 MHz. Mobile Satellite Service licensees operating on frequencies below 2495 MHz may also submit a documented interference complaint against BRS licensees operating on channel BRS Channel 1 on the same terms and conditions as adjacent channel BRS or EBS licensees.

9.3 Test procedure

The RF output terminal of the transmitter was connected to the input of the spectrum analyzer via a suitable attenuation. The RBW of the spectrum analyzer was set to 100kHz and 1MHz for the scan frequency from 30MHz to 1GHz and the scan frequency from 1GHz to up to 10th harmonic.

9.4 Test Result

Please refer to Appendix 5: Band Edge & Appendix 6: Out-of-band Emissions
Test Result: Pass

10. Spurious Radiated Emissions

10.1 Block Diagram Of Test Setup

（A）Radiated Emission Test-Up Frequency Below 30MHz

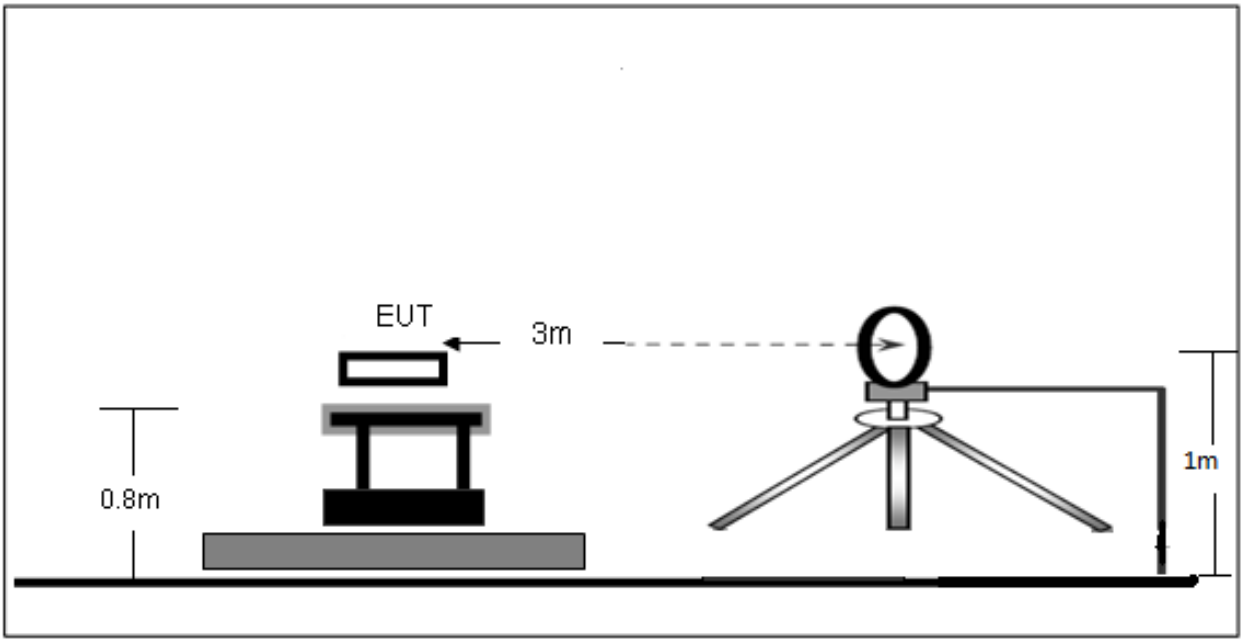

（B）Radiated Emission Test-Up Frequency 30MHz~1GHz

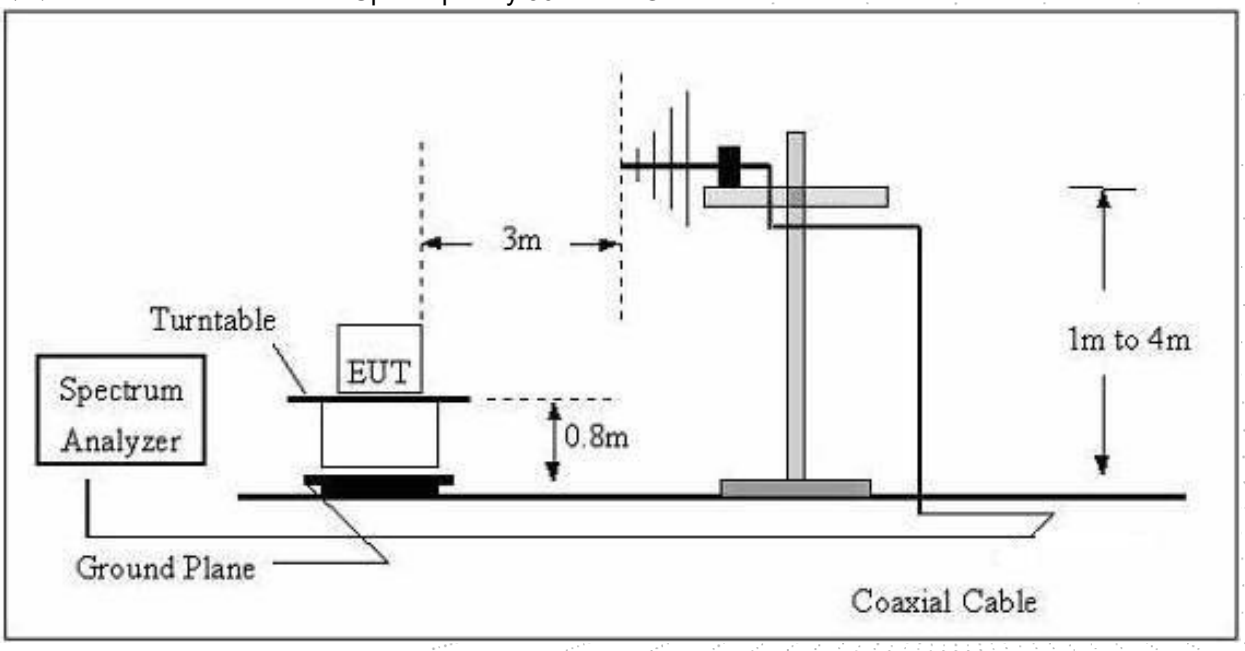

（C）Radiated Emission Test-Up Frequency Above 1GHz

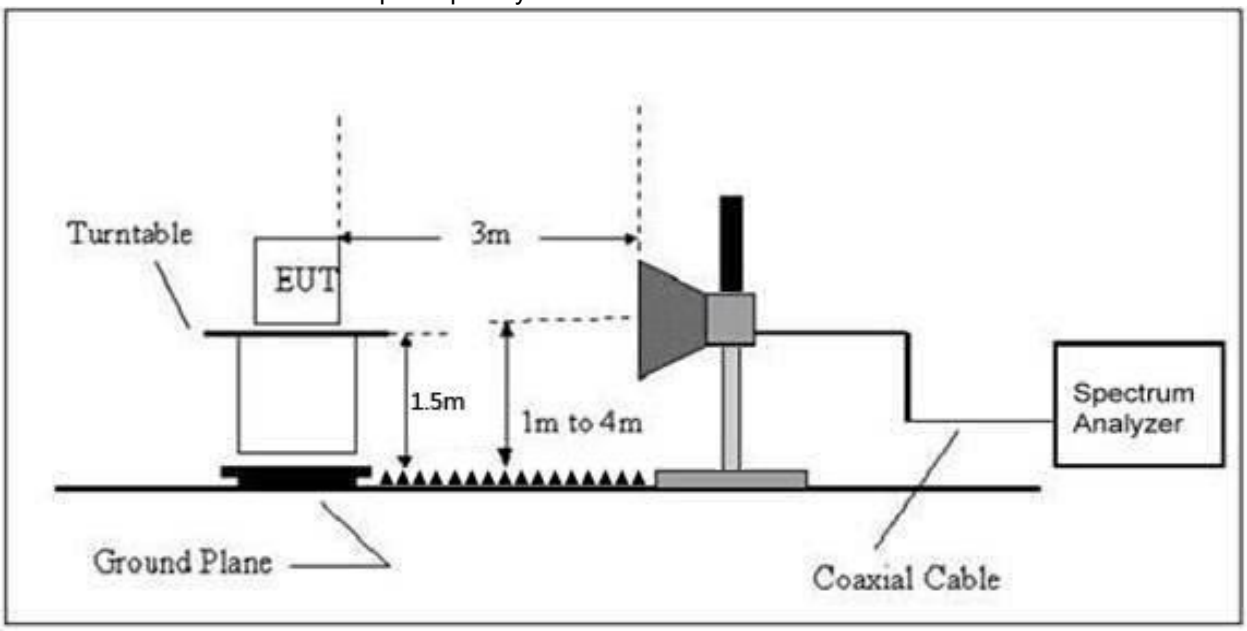

10.2 Limit

FCC § 2.1053 & 22.917(a) & 24.238(a) & 27.53(a) & 27.53(c) & 27.53(f) & 27.53(g) & 27.53(h) & 27.53(m) ;

FCC § 22.917(a) & 24.238(a)

The power of any emission outside of the authorized operating frequency ranges must be attenuated below the transmitting power (P) by a factor of at least 43+10*log(P) dB. This is calculated to be -13 dBm.

FCC § 27.53(g)

For operations in the 600MHz band and the 698-746MHz band, the power of any emission outside a licensee's frequency band(s) of operation shall be attenuated below the transmitter power (P) within the licensed band(s) of operation, measured in watts, by at least 43+10*log(P) dB. Compliance with this provision is based on the use of measurement instrumentation employing a resolution bandwidth of 100 kHz bands immediately outside and adjacent to a licensee's frequency block, a resolution bandwidth of at least 30 kHz may be employed.

FCC § 27.53(h) (1)

Except as otherwise specified below, for operations in the 1695-1710 MHz, 1710-1755 MHz, 1755-1780 MHz, 1915-1920 MHz, 1995-2000 MHz, 2000-2020 MHz, 2110-2155 MHz, 2155-2180 MHz, and 2180-2200 bands,
the power of any emission outside a licensee's frequency block shall be attenuated below the transmitter power
(P) in watts by at least 43 + 10 log10 (P) dB. FCC § 27.53(m) (4)
For mobile digital stations (BRS and EBS stations), the attenuation factor shall be not less than:

•40+10logP dB (−10 dBm, 100 nW) on all frequencies between the channel edge and 5 MHz from the channel edge.
•43+10logP dB (−13 dBm, 50 nW) on all frequencies between 5 MHz and X MHz from the channel edge,

•55+10logP dB (−25 dBm, 3 nW) on all frequencies more than X MHz from the channel edge, where X is the greater of 6 MHz or the actual emission bandwidth (26 dB).

In addition, the attenuation factor shall not be less that 43 + 10 log (P) dB on all frequencies between 2490.5 MHz and 2496 MHz and 55 + 10 log (P) dB at or below 2490.5 MHz. Mobile Satellite Service licensees operating on frequencies below 2495 MHz may also submit a documented interference complaint against BRS licensees operating on channel BRS Channel 1 on the same terms and conditions as adjacent channel BRS or EBS licensees.

10.3 Test procedure

1. The setup of EUT is according with per ANSI/TIA Standard 603D and ANSI C63.4-2014 measurement procedure.
2. The measurement antenna was placed at a distance of 3 meters from the EUT. During the tests, the antenna height and polarization as well as EUT azimuth were varied in order to identify the maximum level of emissions from the EUT. The test was performed by placing the EUT on 3-orthogonal axis.
3. The frequency range up to tenth harmonic of the fundamental frequency was investigated.
4. Remove the EUT and replace it with substitution antenna. A signal generator was connected to the substitution antenna by a non-radiating cable. The absolute levels of the spurious emissions were measured by the substitution.

10.4 Test Result

For FDD-LTE Band 2 Mode

Frequency (MHz)	Reading (dBm)	Correct dB	Result (dBm)	Limit (dBm)	Margin (dB)	Polar H/V
Low Channel (1852.5MHz)						
79.63	-12.73	-30.55	-43.28	-13.00	-30.28	H
3705.00	-21.06	-22.19	-43.25	-13.00	-30.25	H
5557.50	-23.09	-19.32	-42.41	-13.00	-29.41	H
79.63	-11.34	-30.55	-41.89	-13.00	-28.89	V
3705.00	-21.95	-22.19	-44.14	-13.00	-31.14	V
5557.50	-24.16	-19.32	-43.48	-13.00	-30.48	V
Middle Channel (1880MHz)						
79.63	-11.01	-30.55	-41.56	-13.00	-28.56	H
3760.00	-19.48	-22.08	-41.56	-13.00	-28.56	H
5640.00	-24.40	-19.28	-43.68	-13.00	-30.68	H
79.63	-13.12	-30.55	-43.67	-13.00	-30.67	V
3760.00	-20.35	-22.08	-42.43	-13.00	-29.43	V
5640.00	-23.63	-19.28	-42.91	-13.00	-29.91	V
High Channel (1907.5MHz)						
79.63	-13.31	-30.55	-43.86	-13.00	-30.86	H
3815.00	-18.73	-21.97	-40.70	-13.00	-27.70	H
5722.50	-24.37	-19.24	-43.61	-13.00	-30.61	H
79.63	-11.58	-30.55	-42.13	-13.00	-29.13	V
3815.00	-19.85	-21.97	-41.82	-13.00	-28.82	V
5722.50	-23.09	-19.24	-42.33	-13.00	-29.33	V

For FDD-LTE Band 4 Mode

Frequency (MHz)	Reading (dBm)	Correct dB	Result (dBm)	Limit (dBm)	Margin (dB)	Polar H/V
Low Channel (1710.7MHz)						
79.63	-12.16	-30.55	-42.71	-13.00	-29.71	H
3421.40	-26.34	-22.76	-49.10	-13.00	-36.10	H
5132.10	-31.17	-19.53	-50.70	-13.00	-37.70	H
79.63	-14.47	-30.55	-45.02	-13.00	-32.02	V
3421.40	-28.58	-22.76	-51.34	-13.00	-38.34	V
5132.10	-28.54	-19.53	-48.07	-13.00	-35.07	V
Middle Channel (1732.5MHz)						
79.63	-14.93	-30.55	-45.48	-13.00	-32.48	H
3465.00	-26.78	-22.67	-49.45	-13.00	-36.45	H
5197.50	-30.08	-19.51	-49.59	-13.00	-36.59	H
79.63	-13.74	-30.55	-44.29	-13.00	-31.29	V
3465.00	-26.78	-22.67	-49.45	-13.00	-36.45	V
5197.50	-30.77	-19.51	-50.28	-13.00	-37.28	V
High Channel (1754.3MHz)						
79.63	-14.96	-30.55	-45.51	-13.00	-32.51	H
3508.60	-25.86	-14.99	-40.85	-13.00	-27.85	H
5262.90	-29.70	-9.95	-39.65	-13.00	-26.65	H
79.63	-12.09	-30.55	-42.64	-13.00	-29.64	V
3508.60	-27.52	-14.99	-42.51	-13.00	-29.51	V
5262.90	-31.49	-9.95	-41.44	-13.00	-28.44	V

For FDD-LTE Band 5 Mode

Frequency (MHz)	Reading (dBm)	Correct dB	Result (dBm)	Limit (dBm)	Margin (dB)	Polar H/V
Low Channel (824.7MHz)						
79.63	-14.33	-30.55	-44.88	-13.00	-31.88	H
1649.40	-27.43	-27.37	-54.80	-13.00	-41.80	H
2474.10	-29.07	-25.18	-54.25	-13.00	-41.25	H
79.63	-14.16	-30.55	-44.71	-13.00	-31.71	V
1649.40	-28.04	-27.37	-55.41	-13.00	-42.41	V
2474.10	-29.03	-25.18	-54.21	-13.00	-41.21	V
Middle Channel (836.5MHz)						
79.63	-12.57	-30.55	-43.12	-13.00	-30.12	H
1673.00	-27.10	-27.32	-54.42	-13.00	-41.42	H
2509.50	-30.33	-25.07	-55.40	-13.00	-42.40	H
79.63	-14.90	-30.55	-45.45	-13.00	-32.45	V
1673.00	-27.98	-27.32	-55.30	-13.00	-42.30	V
2509.50	-30.61	-25.07	-55.68	-13.00	-42.68	V
High Channel (848.3MHz)						
79.63	-12.97	-30.55	-43.52	-13.00	-30.52	H
1696.60	-25.83	-27.27	-53.10	-13.00	-40.10	H
2544.90	-31.19	-24.97	-56.16	-13.00	-43.16	H
79.63	-14.57	-30.55	-45.12	-13.00	-32.12	V
1696.60	-26.80	-27.27	-54.07	-13.00	-41.07	V
2544.90	-30.52	-24.97	-55.49	-13.00	-42.49	V

For FDD-LTE Band 7 Mode

Frequency (MHz)	Reading (dBm)	Correct dB	Result (dBm)	Limit (dBm)	Margin (dB)	Polar H/V
Low Channel (2502.5MHz)						
79.63	-12.22	-30.55	-42.77	-25.00	-17.77	H
5005.00	-20.62	-19.60	-40.22	-25.00	-15.22	H
7507.50	-23.91	-13.38	-37.29	-25.00	-12.29	H
79.63	-11.10	-30.55	-41.65	-25.00	-16.65	V
5005.00	-21.43	-19.60	-41.03	-25.00	-16.03	V
7507.50	-26.14	-13.38	-39.52	-25.00	-14.52	V
Middle Channel (2535MHz)						
79.63	-12.99	-30.55	-43.54	-25.00	-18.54	H
5070.00	-20.45	-19.57	-40.02	-25.00	-15.02	H
7605.00	-26.96	-13.11	-40.07	-25.00	-15.07	H
79.63	-14.45	-30.55	-45.00	-25.00	-20.00	V
5070.00	-20.77	-19.57	-40.34	-25.00	-15.34	V
7605.00	-23.02	-13.11	-36.13	-25.00	-11.13	V
High Channel (2567.5MHz)						
79.63	-13.21	-30.55	-43.76	-25.00	-18.76	H
5135.00	-19.50	-19.53	-39.03	-25.00	-14.03	H
7702.50	-25.11	-12.83	-37.94	-25.00	-12.94	H
79.63	-13.08	-30.55	-43.63	-25.00	-18.63	V
5135.00	-20.78	-19.53	-40.31	-25.00	-15.31	V
7702.50	-23.49	-12.83	-36.32	-25.00	-11.32	V

For FDD-LTE Band 12 Mode

Frequency (MHz)	Reading (dBm)	Correct dB	Result (dBm)	Limit (dBm)	Margin (dB)	Polar H/V
Low Channel (699.7MHz)						
79.63	-11.80	-30.55	-42.35	-13.00	-29.35	H
1399.40	-25.87	-27.92	-53.79	-13.00	-40.79	H
2099.10	-29.65	-26.30	-55.95	-13.00	-42.95	H
79.63	-12.74	-30.55	-43.29	-13.00	-30.29	V
1399.40	-28.21	-27.92	-56.13	-13.00	-43.13	V
2099.10	-30.92	-26.30	-57.22	-13.00	-44.22	V
Middle Channel (707.5MHz)						
79.63	-12.92	-30.55	-43.47	-13.00	-30.47	H
1415.00	-24.49	-27.89	-52.38	-13.00	-39.38	H
2122.50	-30.81	-26.23	-57.04	-13.00	-44.04	H
79.63	-12.88	-30.55	-43.43	-13.00	-30.43	V
1415.00	-26.09	-27.89	-53.98	-13.00	-40.98	V
2122.50	-29.90	-26.23	-56.13	-13.00	-43.13	V
High Channel (715.3MHz)						
79.63	-11.77	-30.55	-42.32	-13.00	-29.32	H
1430.60	-27.74	-27.85	-55.59	-13.00	-42.59	H
2145.90	-30.61	-26.16	-56.77	-13.00	-43.77	H
79.63	-13.95	-30.55	-44.50	-13.00	-31.50	V
1430.60	-27.80	-27.85	-55.65	-13.00	-42.65	V
2145.90	-31.46	-26.16	-57.62	-13.00	-44.62	V

For FDD-LTE Band 17 Mode

Frequency (MHz)	Reading (dBm)	Correct dB	Result (dBm)	Limit (dBm)	Margin (dB)	Polar H/V
Low Channel (706.5MHz)						
79.63	-13.86	-30.55	-44.41	-13.00	-31.41	H
1413.00	-27.63	-27.89	-55.52	-13.00	-42.52	H
2119.50	-32.40	-26.24	-58.64	-13.00	-45.64	H
79.63	-14.04	-30.55	-44.59	-13.00	-31.59	V
1413.00	-26.09	-27.89	-53.98	-13.00	-40.98	V
2119.50	-31.59	-26.24	-57.83	-13.00	-44.83	V
Middle Channel (710MHz)						
79.63	-12.84	-30.55	-43.39	-13.00	-30.39	H
1420.00	-27.78	-27.88	-55.66	-13.00	-42.66	H
2130.00	-29.15	-26.21	-55.36	-13.00	-42.36	H
79.63	-13.98	-30.55	-44.53	-13.00	-31.53	V
1420.00	-27.84	-27.88	-55.72	-13.00	-42.72	V
2130.00	-29.92	-26.21	-56.13	-13.00	-43.13	V
High Channel (713.5MHz)						
79.63	-12.19	-30.55	-42.74	-13.00	-29.74	H
1427.00	-26.29	-27.86	-54.15	-13.00	-41.15	H
2140.50	-29.04	-26.18	-55.22	-13.00	-42.22	H
79.63	-12.54	-30.55	-43.09	-13.00	-30.09	V
1427.00	-29.80	-27.86	-57.66	-13.00	-44.66	V
2140.50	-29.73	-26.18	-55.91	-13.00	-42.91	V

Note: Result=Reading+ Correct, Margin= Result- Limit
Note: Testing is carried out with frequency rang 9kHz to the tenth harmonics, other than listed in the table above are attenuated more than 20dB below the permissible limits or the field strength is too small to be measured.

11. Frequency Stability

11.1 Block Diagram Of Test Setup

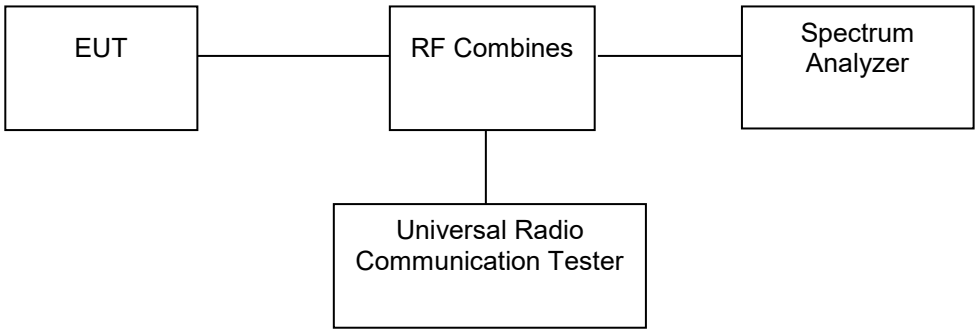

11.2 Limit

FCC Part 22.355: ±2.5 ppm
FCC Part 24.235:
The frequency stability shall be sufficient to ensure that the fundamental emission stays within the authorized frequency block.
FCC Part 27.54
The frequency stability shall be sufficient to ensure that the fundamental emissions stay within the authorized bands of operation.

11.3 Test procedure

Test Procedures for Temperature Variation
1. The testing follows FCC KDB 971168 D01v03 Section 9.0.
2. The EUT was set up in the thermal chamber and connected with the system simulator.
3. With power OFF, the temperature was decreased to -30°C and the EUT was stabilized before testing. Power was applied and the maximum change in frequency was recorded within one minute.
4. With power OFF, the temperature was raised in 10°C steps up to 50°C. The EUT was stabilized at each step for at least half an hour. Power was applied and the maximum frequency change was recorded within one minute.
Test Procedures for Voltage Variation
1. The testing follows FCC KDB 971168 D01v03 Section 9.0.
2. The EUT was placed in a temperature chamber at 25±5° C and connected with the system simulator.
3. The power supply voltage to the EUT was varied from BEP to 115% of the nominal value measured at the input to the EUT.
4. The variation in frequency was measured for the worst case.
5. The worst case (worst bandwidth) for frequency stability reported in the Test Data.
The worst bandwidth is as follow:
1.4M is for LTE Band 2, 1.4M is for LTE Band 4,
1.4M is for LTE Band 5, 1.4M is for LTE Band 7,
5M is for LTE Band 12, 1.4M is for LTE Band 17.

11.4 Test Result

Please refer to Appendix 2: Frequency Stability
Test Result: Pass

12. EUT Photographs

EUT Photo 1

EUT Photo 2

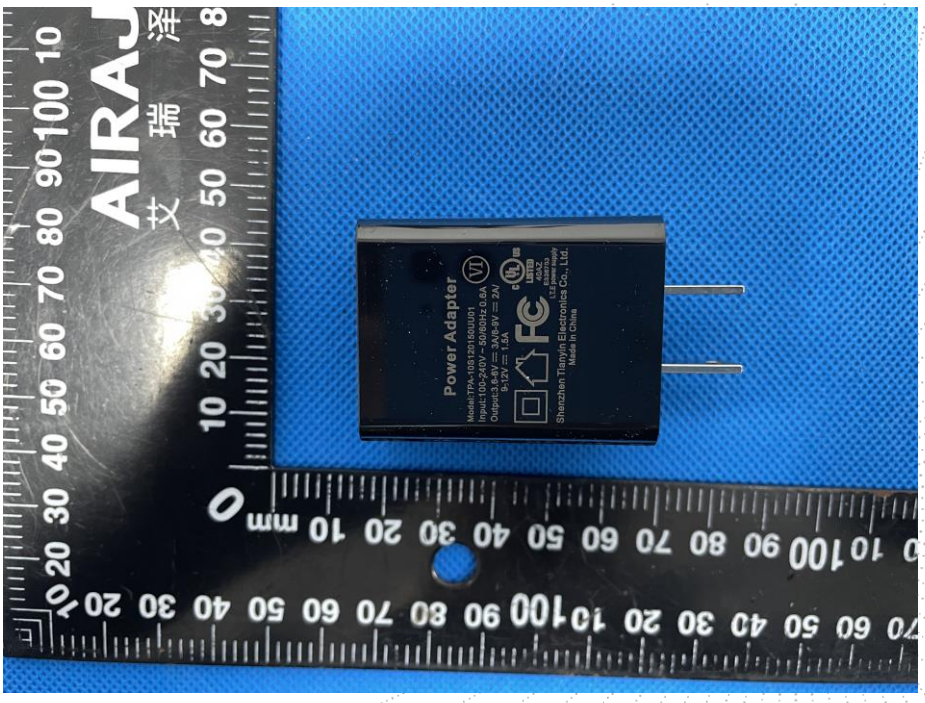

NOTE: Appendix-Photographs Of EUT Constructional Details.

13. EUT Test Setup Photographs

Radiated Measurement Photos

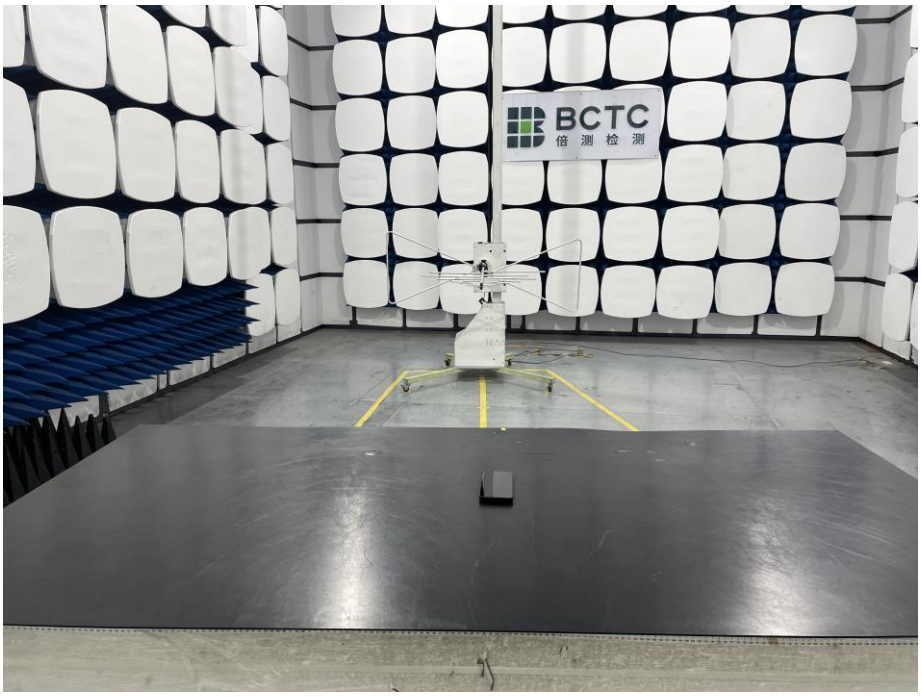

STATEMENT

1. The equipment lists are traceable to the national reference standards.

2. The test report can not be partially copied unless prior written approval is issued from our lab.

3. The test report is invalid without the "special seal for inspection and testing".

4. The test report is invalid without the signature of the approver.

5. The test process and test result is only related to the Unit Under Test.

6. Sample information is provided by the client and the laboratory is not responsible for its authenticity.

7. The quality system of our laboratory is in accordance with ISO/IEC17025.

8. If there is any objection to this test report, the client should inform issuing laboratory within 15 days from the date of receiving test report.

Address:
1-2/F., Building B, Pengzhou Industrial Park, No.158, Fuyuan 1st Road, Zhancheng, Fuhai Subdistrict, Bao'an District, Shenzhen, Guangdong, China

TEL: 400-788-9558

P.C.: 518103

FAX: 0755-33229357

Website: http://www.chnbctc.com

Consultation E-mail: bctc@bctc-lab.com.cn

Complaint/Advice E-mail: advice@bctc-lab.com.cn

※※※※※ END ※※※※※