Shenzhen Qisen Technology Co., Ltd.

SPECIFICATION FOR APPROVAL

COMPANY NAME

Shenzhen Qisen Technology Co., Ltd.

PRODUCT P/N

QS20121101

PRODUCT NAME

Built-in SMA male pin 5DB antenna

Confirmed by	The Company

address: 4th Floor, No. 22 Anye Road, Henggang Street, Longgang District, Shenzhen
telephone: 0755-84864089 / 15989305086
website: www.qskjgf.com

Shenzhen Qisen Technology Co., Ltd.

catalogue

1. ·····Product Acknowledgment Cover·····

2. ·····Product catalogue·····

3. ·····Product Recognition·····

4. ·····Product Specification Sheet·····

5. ·····Product drawings·····

6. ·····Product Test Report·····

7. ·····Product Summary·····

address: 4th Floor, No. 22 Anye Road, Henggang Street, Longgang District, Shenzhen

telephone: 0755-84864089 / 15989305086

website: www.qskjgf.com

Shenzhen Qisen Technology Co., Ltd.

3. Customer confirmation:

CUSTOMER NAME

Rcstars Industrial (Shenzhen) Co., LTD.

Sample submission date	2020-03-31	Product Item No.	QS20121101
Customer No.	QisenQ0715	Customer Item No.	
Product name	Built-in SMA male pin 5DB antenna		
Product specifications	178wire300MM		
attachment	■Product drawing ■Product RoHS ■Performance test ■Sample quantity		
Supporting document	□CE □FCC ■RoHS □3C □others:		
remarks			

Confirmed by Customer

address: 4th Floor, No. 22 Anye Road, Henggang Street, Longgang District, Shenzhen
telephone: 0755-84864089 / 15989305086
website: www.qskjgf.com

4. Specification sheet:

Main technical specifications	
Frequency Range (MHZ)	2400-2483.5MHz
Impedance(Ω)	50±10
Peak Gain(dBi)	5±0.5
VSWR	≤1.92
Admitted Power	10W
Polarization	Linear,Vertical
Connector Type	SMA
Physical Properties	
Antenna Base	Naked copper
Operating Temp	-20℃~+65℃
Storage Temp	-30℃~+75℃
Antenna length	488MM

address: 4th Floor, No. 22 Anye Road, Henggang Street,
Longgang District, Shenzhen
telephone: 0755-84864089 / 15989305086
website: www.qskjgf.com

5. Product drawing

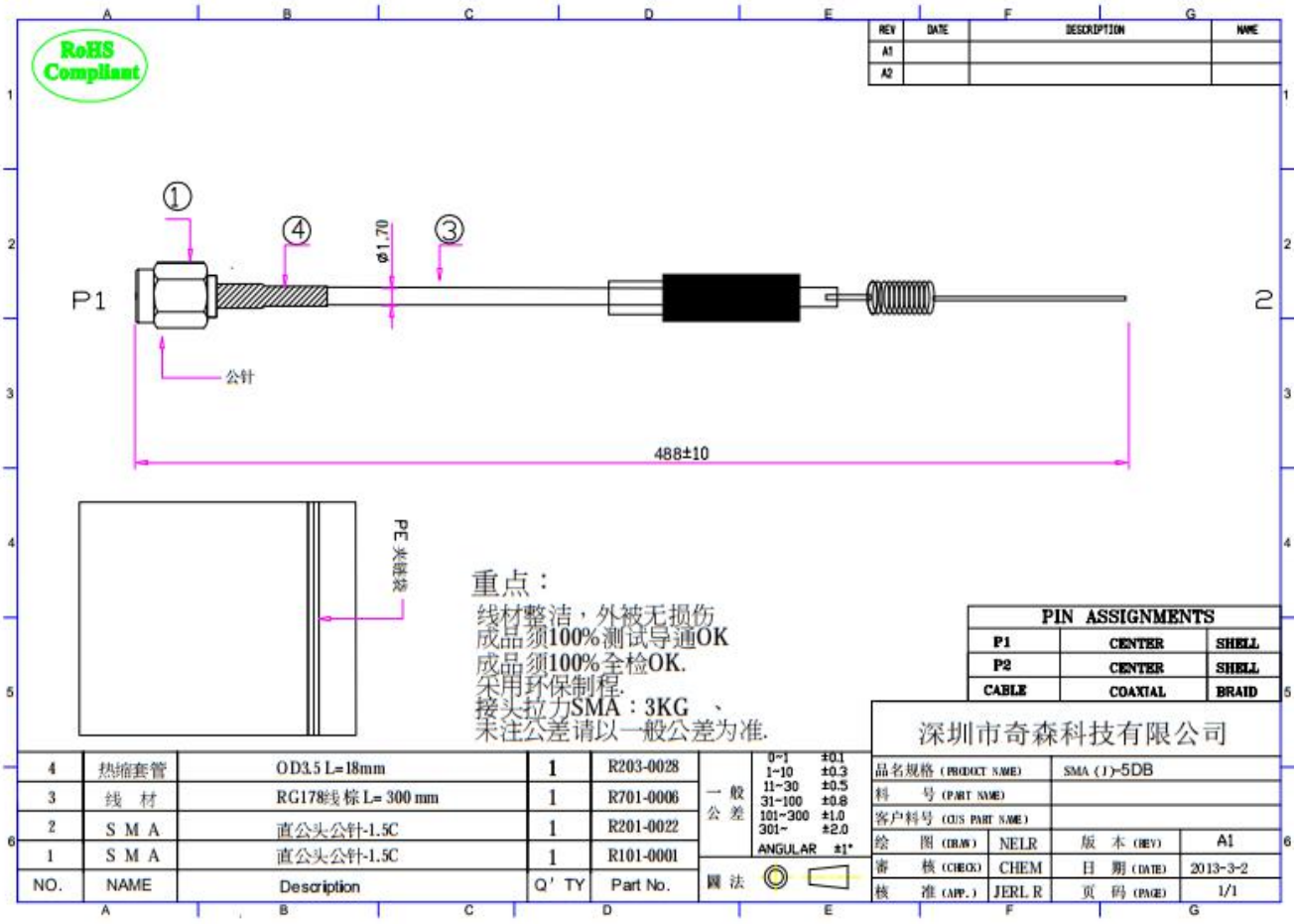

Shenzhen Qisen Technology Co., Ltd.

address: 4th Floor, No. 22 Anye Road, Henggang Street,
Longgang District, Shenzhen
telephone: 0755-84864089 / 15989305086
website: www.qskjgf.com

6.Test report

6.1、Microwave darkroom test schematic

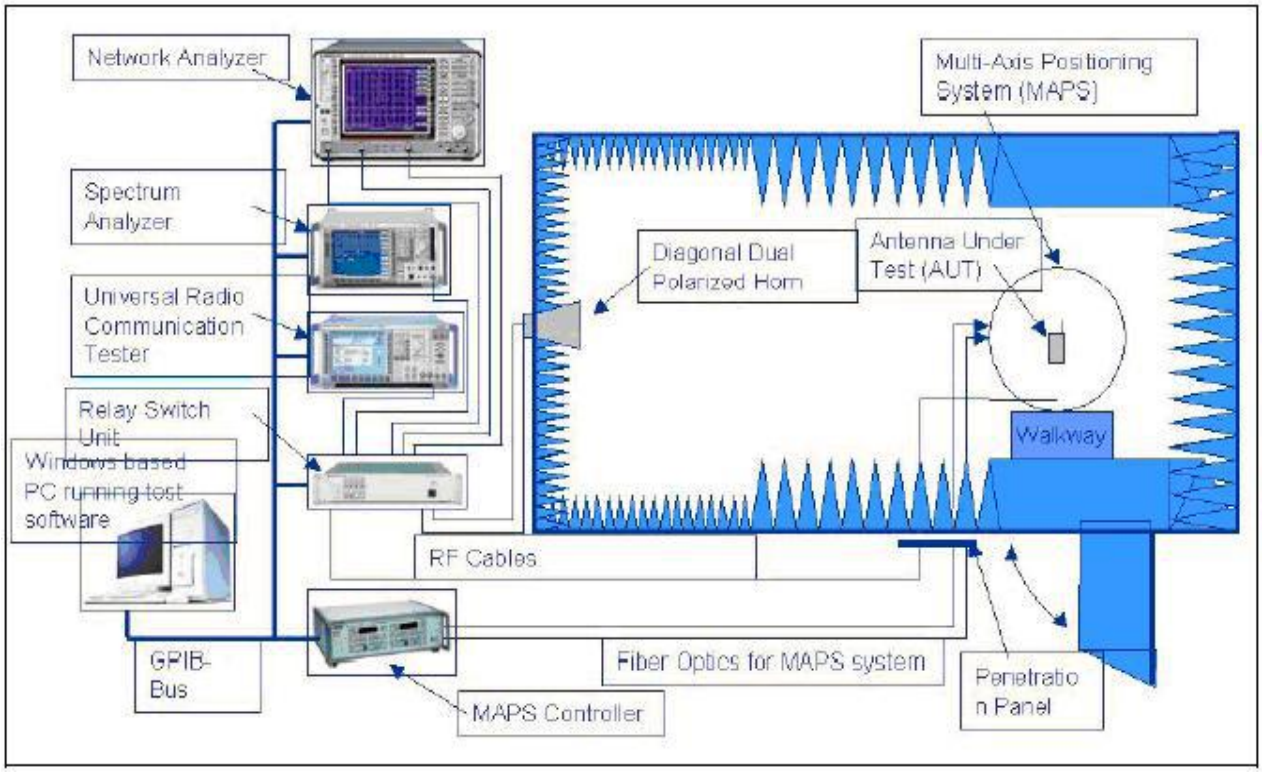

2、Matching circuit

No matching circuit was added.

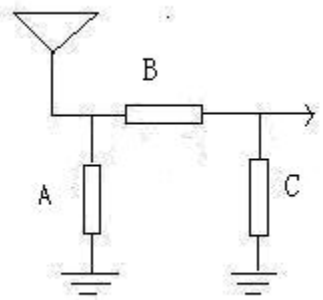

address: 4th Floor, No. 22 Anye Road, Henggang Street, Longgang District, Shenzhen
telephone: 0755-84864089 / 15989305086
website: www.qskjgf.com

6.2、Actual environment S11 test result

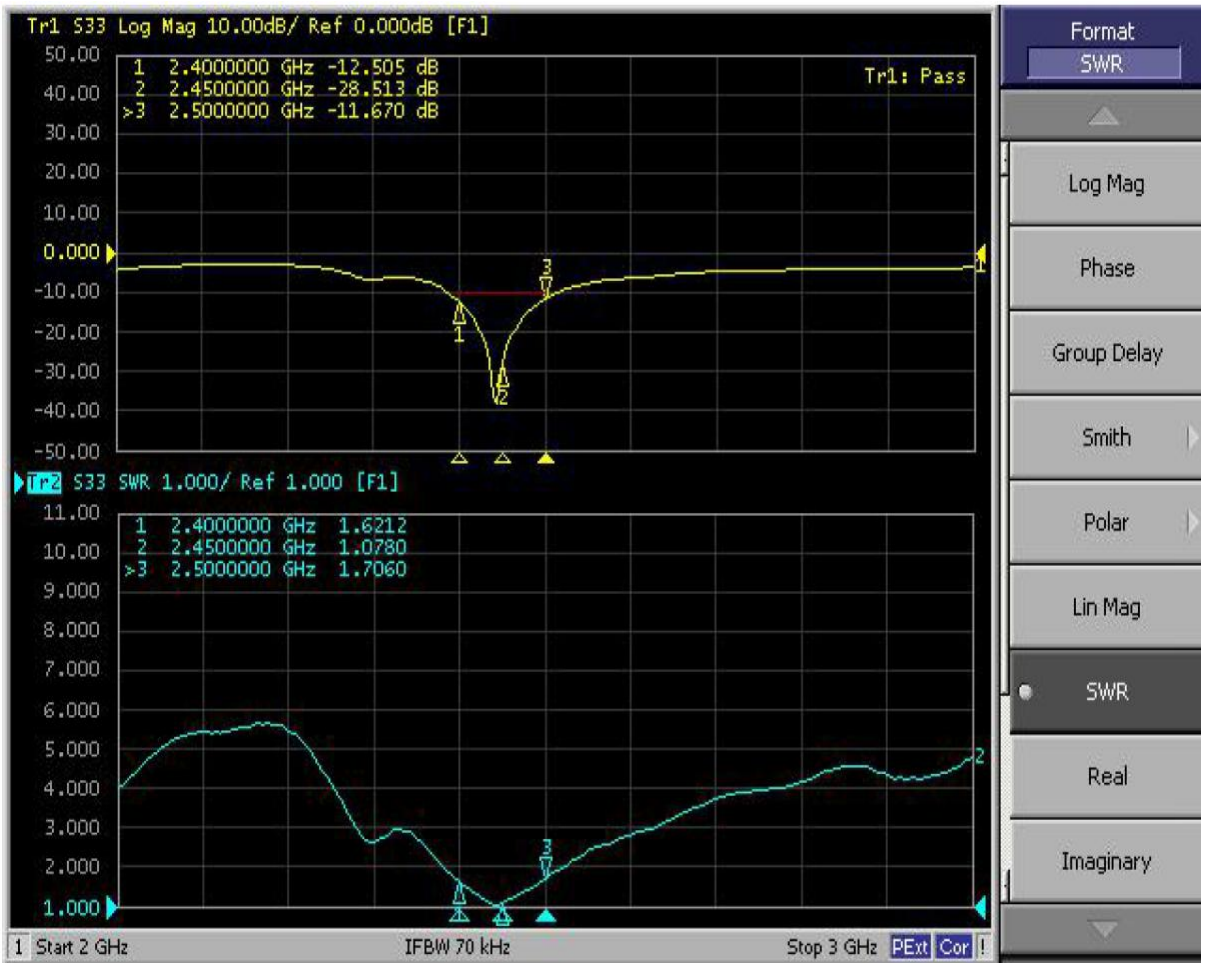

Antenna standing wave ratio and return loss:

Frequency (MHz)	2400	2450	2500
VSWR	1.62	1.07	1.7
Return Loss	-12.51	-28.51	-11.67

address: 4th Floor, No. 22 Anye Road, Henggang Street, Longgang District, Shenzhen
telephone: 0755-84864089 / 15989305086
website: www.qskjgf.com

6.3、Antenna matching test data

Frequency	Gain	Effective
（MHz）	dBi	（%）
2400	5.24	59.8
2410	5.54	64.1
2420	5.74	67.24
2430	5.68	66.61
2440	5.63	66.84
2450	5.56	67.28
2460	5.22	64.31
2470	5.37	64.58
2480	5.52	66.09
2490	5.81	71.13
2500	5.57	69.35

6.4、Antenna test 3D image

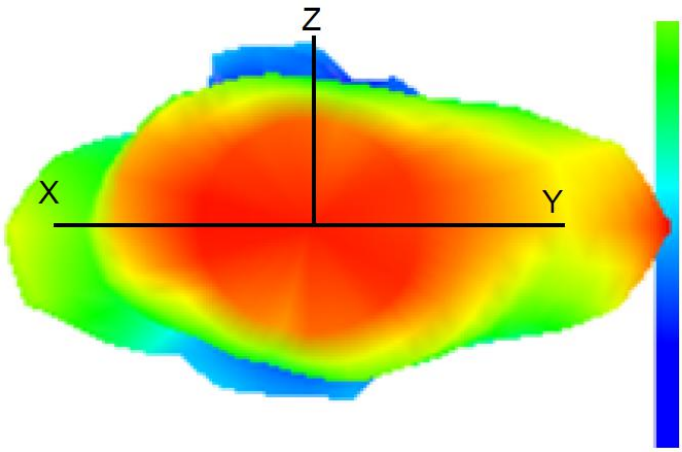

7. Product summary

According to current antenna data, the matched antenna exhibits good electrical performance

address: 4th Floor, No. 22 Anye Road, Henggang Street, Longgang District, Shenzhen
telephone: 0755-84864089 / 15989305086
website: www.qskjgf.com