Item	Description
	• ASAP Samples will be added as STATs to the worklist of Modules/Analyzer supporting STAT priority (e.g. CM, EXL and XN9). • ASAP Samples will not be parked for analyzer overload, as the STAT Samples. • If set to `No`, ASAP Samples will not be prioritized over Routine Samples. • Default value is `No`. It is possible to change the setting while tubes are running on the track. Automation software will make the new setting effective and apply it to the tubes. **NOTE:** ASAP Samples will be retrieved with ASAP priority from IOM/SRM/HVS with MCA/MRA technology (Initialize = 1M), regardless of the setting of the `Prioritize ASAP Samples` entry.
`RIM Sample ID Prefixes For Pre-Spun Tubes`	• If this entry contains the list of Sample ID Prefixes (separated by blanks) for which to consider a Sample Tube loaded from RIM as pre-spun. • This entry is shown only in case a RIM and a Centrifuge Module are installed and it is applicable only for the RIMs which `RIM X Sample Tube Configuration` (where X is the instance of the RIM) entry is set to `Routine Input` . • Default value is the empty string.

`RIM X Sample Tube Configuration`	• If set to `Skip Centrifuge` :
	  • If the Tube Identification Module is enabled:
	  • sample tubes (requiring centrifugation) loaded from the RIM and detected as capped are considered as pre-spun;
	  • sample tubes loaded from the RIM and detected as uncapped are considered as pre-spun.
	  • If the Tube Identification Module is disabled:
	  • sample tubes (requiring centrifugation) loaded from the RIM are considered as capped and pre-spun.
	• If set to `Uncapped` :
	  • If the Tube Identification Module is enabled:
	  • sample tubes loaded from the RIM and detected as capped are sent to Priority Output Racks (Capped Tube Detected in Uncapped Input Rack).

Item	Description

	• If the Tube Identification Module is disabled:
	  • sample tubes loaded from the RIM are considered as uncapped and, if requiring centrifugation, pre-spun.
	  CAUTION: Do not load capped tubes. This could damage the needle of the Analyzer during sampling.
	• If set to `Routine Input` :
	  • If the Tube Identification Module is enabled:
	  • samples tubes (requiring centrifugation) loaded from the RIM and detected as capped are considered as unspun if a Centrifuge is installed or pre-spun if no Centrifuge is installed;
	  • samples tubes loaded from the RIM and detected as uncapped are considered as pre-spun.
	  • If the Tube Identification Module is disabled:
	  • sample tubes (requiring centrifugation) loaded from RIM are considered as capped and unspun if a Centrifuge is installed or capped and pre-spun if no Centrifuge is installed but a Decapper is installed or an Analyzer for capped tubes is installed or
	  • sample tubes (requiring centrifugation) loaded from RIM are considered as uncapped if no Centrifuge nor Decapper nor Analyzer for capped tube is installed.
	• This entry is shown only in case RIM X is installed.
	• Default value is `Routine Input` .

`ROM Unloads Complete Samples`	• If set to `Yes` and `IOM Helps Storage to Unload Tubes` is set to `No` , complete sample tubes are unloaded into the Rack Output Module. • If set to `No` , complete sample tubes are not unloaded into the Rack Output Module. • Default value is `No` .
`ROM X Sample Tube Configuration`	• If this entry is set to `Complete`, Complete Samples will be unloaded to the Rack Output Module with instance x (x=1..9) or to ROM-400 (RM4) with instance x (x=1..9). **NOTE:**

Item	Description
	in case both ROM's and ROM's-400 are installed, it is better to assign to them different instances (e.g. 1 and 2 to ROM's-400 and 3 and 4 to ROM's) in order to configure as output only the correct Module). • If this entry is set to `n/a` , Complete Samples will not be unloaded to the Rack Output Module with instance x (x=1..9). • This entry is shown only in case ROM X is installed. • Default value is `n/a` .
`Shaker Timeout (minutes)`	• Maximum time, in minutes, before the shaken Sample reaches the Analyzer to be processed. • This entry is shown only in case Universal Shaker Module is installed. • Default value is “2”.

`Storage Default Dwell Time (mins)`	• Storing Time before waste (in minutes) for Samples unloaded to Storage that have Sorting Tests only (i.e. Sorting Tests configured in the Sorting Test Table with S as Sorting Lane)
	• This entry is shown only in case a Storage Module is installed.
	• The Storage default dwell time may be expressed in:
	  • Workdays, number of days not counting Holidays (e.g. New Year's Day) and days not set as Working Days (e.g. Saturdays and Sundays), as configured in the Configuration/Calendar Screen.
	  • Days (number of calendar days also counting Holidays, Sundays, etc.).
	  • Hours (number of hours).
	  • Minutes (number of minutes).

`Storage Multiple Waste Bins`	• If set to `Yes` , Multiple Waste Bins are installed. • If set to `No` , Multiple Waste Bins are not installed. • This entry is show only in case a Storage Module is installed. • Default value is `No` .

Item	Description
`Storage Full Threshold (Tubes)`	• Max number of Tubes that can be located in the Storage Module: if this number is exceeded, the Tubes that are scheduled to be disposed earlier, will be automatically retrieved from Storage and sent to PO Racks with the `Storage Full` Error. • This entry is shown only in case a Storage is installed. • Valid Values are from “1” to “15360”. • If the Value is set to “15360”, the automatic retrieve function is disabled. • Default Value is “15360”.
`Storage Reset Dwell Time`	• If set to `Yes` , Sample Tube Dwell Time is reset to maximum Test Dwell Time value once a Tube is loaded again into a Storage Module after a retrieval. • If set to `No` , Sample Tube Dwell Time is re-calculated as the remaining time, calculated from the first time it went to the Storage, once a tube is loaded again into a Storage Module after a retrieval. • This entry is shown only in case a Storage Module is installed. • Default value is `Yes` .

4.10.4.13 Vision System

In this sub-screen, it is possible to enable or disable the Vision System for each Module that support it.

The settings of this Sub-Screen may be changed only with Supervisor Access Level.

4.11 Lower panel

Click on the arrow indicator – always visible in the bottom of UI – to open the Lower panel.

4.11.1 HOME

It reports the graphs for the following items.

Item	Description
`System`	Indicates the usage percentage of the computer server hard disk. By clicking on the `Hard Disk` bars of the `System` section, a pop-up displays the current status of the RAID disks.
`Overdue`	Indicates the number of overdue tests and samples with errors. Errors are referred to the number of sample tubes sent to Priority Output (PO) racks.
`Tube status`	Summarizes the current processing status, classified according to various criteria (patients, samples, tests, urgency).

4.11.2 Tube Status

Every patient, sample and test can go through different operation stages (or states). The Tube Status table shows the distribution of samples for every state of the operation.

The samples are grouped according to different criteria.

Item	Description
`PATIENT`	Number of patients in progress. One or more samples can be linked to every patient.
`TUBE`	Number of tubes in progress. One or more tests can be linked to every sample (or test tube).
`TEST`	Number of tests in progress. Includes tests with normal priority (routine) as well as tests with high priority (emergencies, identified with the STAT acronym, for which the results must be available in less time in respect to routine tests).

Item	Description
`EMERGENCIES (STAT)`	Number of tests with high priority in progress (`TEST` item subset, described above).
`OVERDUE`	Number of tests in which the process time has exceeded one or more previously set deadlines (`TEST` item subset, described above).

For every item, the numerical distribution in the various stages of the operation is calculated. The meaning of the states is slightly different depending on whether the classification is based on individual tests (or the Tests, Emergencies and Overdue items) or whether it is based on Patients and Samples, since the latter both refer to a set of one or more tests.

Selecting numerical data from the Tube Status table opens the Validation screen displaying the patient relating to the selected data.

4.11.3 Connections Monitor

The Connections Monitor section is divided into 3 squares – `Hosts`, `Automations` and `Instruments` – according to the Instrument types connectable to DMS.

The information in the square is organized in the following tabs.

- `Default View` tab.
- `More Driver Info` tab. It reports detailed communication information for use by FSE.
- `More Test Info` tab only present in `Instrument` square.

4.11.3.1 Hosts tab – Default View

Tab with the list of connected channels to Host. Each line represents one channel in which the communication status (`Activity`) is indicated - by means of an icon - as well as other information on the processing of the samples.

Item	Description
`Cancelled`	Number of canceled tests.
`To be sent`	Number of tests in the Validated status, ready to be sent to the Host.
`Sent`	Number of tests in the Final status, already sent to the Host.

4.11.3.2 Automations tab – Default View

Tab with the list of connected Automation Systems. Each line represents one Automation in which the communication status (`Activity`) is indicated - by means of an icon - as well as other information on the processing of the samples.

Item	Description
`New`	Number of new tests requested.
`Add`	Number of tests added to a previous order.
`To be sent`	Number of tests to be sent to Automation System and to the Instruments.
`Sent`	Number of tests for which the programming was sent to Automation System and to the Instruments.

4.11.3.3 Instruments tab – Default View

Tab with the list of connected Instrument. Each line represents one Instrument in which the communication status (`Activity`) is indicated - by means of an icon - as well as other information on the processing of the samples.

Item	Description
`Enable`	Indicates whether or not the Analyzer is enabled to carry out the tests. By selecting the icon it is possible to alternately enable/disable the Analyzer. **NOTE:** This option is effective only for Analyzers connected to an Automation System. For standalone Analyzers, changing the Enable status has no practical effect.
`Enable/Total`	Number of tests currently enabled on the specific Analyzer and total number of tests set up on the Analyzer.
`Held`	Number of tests carried out on the Analyzer with Held status.
`Validated`	Number of tests carried out on the Analyzer with Validated status.

4.11.3.4 Instruments tab – More Test Info

This tab expands in detail the items in Held and Validated status of the `Default View` of the `Instruments` square.

Tests are subdivided according to the 4 Held levels (from H1 to H4) and the 4 Validation levels (from V1 to V4). By selecting numerical data from the tab, the Validation screen of the patients relating to the selected data opens.

4.12 Other UI elements

The elements present in the UI are navigable and can be selected by means of a mouse. In cases in which it is necessary to enter text or numbers into the boxes provided, the use of the keyboard is required.

4.12.1 Listbox

A listbox is a specific area, divided in rows, where information is displayed.

Some rows allow the user to configure their values. To edit a row of a list box:

1. Select the row to be edited.
2. If the row allows only a choice between pre-configured values, select a value from the drop-down list, otherwise insert the desired value.
3. Press enter button on keyboard to save the new value

In some cases, during editing, a red triangle on the top left-hand corner of the box indicates that the content of the box has changed and a new value has been entered. By saving changes, the new data is effectively saved, otherwise, by canceling the operation, the previous values are restored.

4.12.2 Pop-up messages

Pop-up messages are displayed when an action is attempted or a selection is made that requires confirmation, cannot be done, is not appropriate, or could result in an error or warning condition

The pop-up message describes the situation and provides options to either continue or cancel the action.

Figure 49: Example of pop-up message

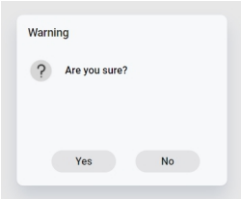

4.12.3 Notifications

There are two different types on notifications on UI.

Notification	Description
Non-blocking pop-ups	Software warns the User by means of messages which appear as pop-ups in the lower right-hand corner. The displayed events may be general or specific messages and errors regarding communication with the Instruments, the processing of test-tubes and the operations performed by the User (or by other connected users). This type of pop-up does not stop the User's operation and does not affect the software functionality.
Blocking pop-ups	Some types of operations and events require confirmation or an option selection on the part of the User. These confirmations and options are shown by means of a pop-up, in the center of the screen, which requires interaction with the User and temporarily blocks access to the other commands until the User has read the pop-up and confirmed it.

5 Operations

5.1 General

5.1.1 How to install the third-party utilities

This procedure is intended to be a reference for the technician who has in charge the installation of the third-party utilities.

⚠ WARNING

Electrical hazard.

Operator or service injury due to contact with live parts caused by cable sheath damage.

Use power cables of third-party that pass along the Automation System compliant with one of the following specific international/local Regulations:

- IEC60227
- EN50525-2-11
- UL62
- CSA-C22.2 N.49

⚠ WARNING

Hazards associated with the environment in which the machine is used.

Delayed results due to electromagnetic interference with the Automation System generated by power/signal cables of third-party that pass along the Automation System.

Use signal cables of third-party that pass along the Automation System shielded and compliant with specific international/local Regulations.

Make sure that the third-party utilities installed to the Automation System are compliant with EN61326-2-6 (only for power cables and signal cables).

⚠ WARNING

Electrical hazard.

Operator or service injury due contact with live parts caused by leaking liquids from tubes of third-party that pass along the Automation System.

Install only drain tubes, not under pressure, for the third–party utilities that pass along the Automation System.

Use tubes of third-party that pass along the Automation System compliant with specific international/local Regulations.

⚠ WARNING

Slipping hazard.

Operator or service injury due liquid on the floor around the Automation System caused by leaking liquids from tubes of third-party that pass along the Automation System.

Take precautions against the possible presence of liquid spilled from tubes of third parties on the floor around the Automation System.

Use tubes of third-party that pass along the Automation System compliant with specific international/local Regulations.

5.1.1.1 Prerequisites

Authorized personnel:	Trained third-party personnels
Conditions:	Automation System powered off
Tools and materials:	n/a
Procedures:	None

5.1.1.2 Task steps

Position the third–party utilities in the track area reserved to third-party wires and tubes, i.e. the slots (Figure 50 – A) of the lower beam (Figure 50 – B).

Figure 50:

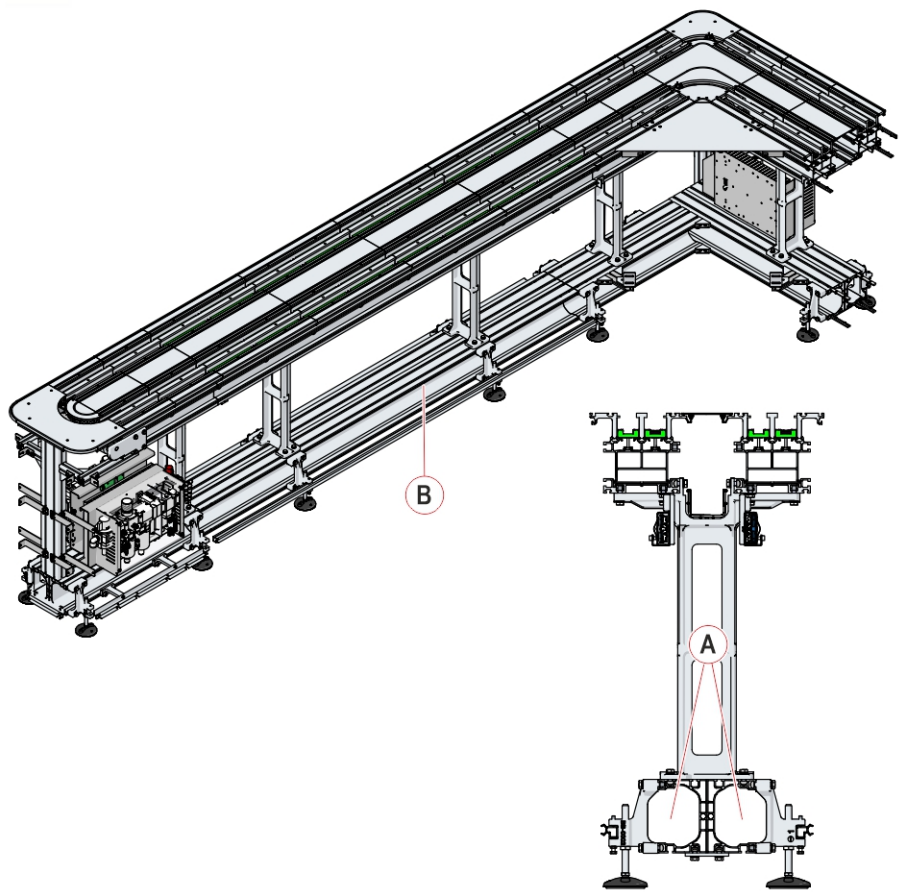

Obey the following indications.

Option	Description
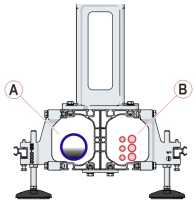	Divide the drain tubes (A) from the power/signal cables (B).
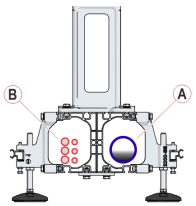	
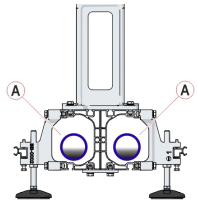	In case it is necessary to install the drain tubes (A) on both the sides of the Automation track, install the drain tubes in both the slots and no more the power/signal cables.

5.1.1.3 Verification steps

None.

5.1.2 How to power up the Automation System

⚠ WARNING

Do not attempt to operate any switch or other energy isolating device where it is tagged out due maintenance operations.

NOTICE

Sample information lost.

In case of loss of electrical power or emergency shutdown, sample tubes could be considered processed even if not all the scheduled operations have been completed.

When the Automation System is powered on, check that all tests associated to sample tubes are completed.

NOTICE

The samples integrity could be affected if tubes are left on Automation System after turning off the power supply. Refer to the Laboratory guidelines for more information about sample preparation and storage.

NOTICE

If the power cable of the Centrifuge is independent from the main power supply, it is recommended to turn on this module before turning on the main power.

NOTICE

If the power cable of the Refrigerator Unit of the Storage and Retrieval Module is independent from the main power supply, it is recommended to turn on the Refrigerator Unit before turning on the main power.

NOTICE

At System startup, all Modules will be automatically re-initialized. Wait for initialization to be completed before starting sample processing. If the initialization of a Module cannot be completed, contact the Service Assistance for more details.

This procedure explains how to power up the Automation System.

This procedure does not restore the Analyzers power supply, refer to the Operations Manual of the specific Analyzer for more information.

5.1.2.1 Prerequisites

Authorized personnel:	Only trained operators are allowed to reach and operate the main power switch for the sole purpose of powering up the Automation System.
Conditions:	Automation System shut down
Tools and materials:	None
Procedures:	None

5.1.2.2 Task steps

1. Plug in the independent Centrifuge power cable if it was unplugged during an emergency shutdown.
2. Plug in the independent Refrigerator Unit power cable if it was unplugged during an emergency shutdown.
3. Wait at least 5 minutes from the last shutdown before powering up the Automation System.
4. Locate the main power switch of the Automation System and remove the panel to access.

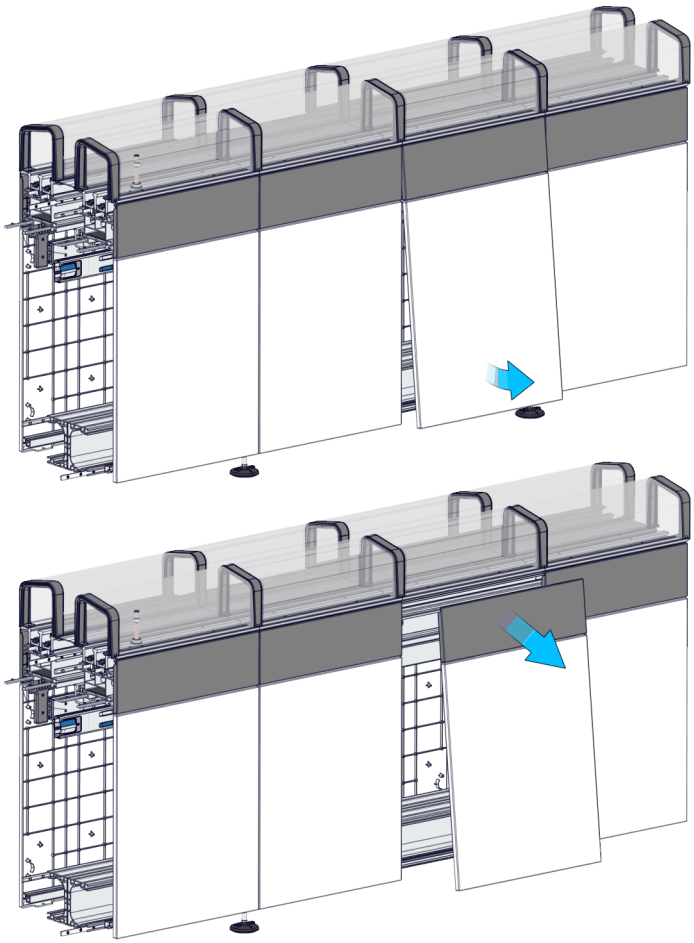

⚠ WARNING

Electrical hazard.

Operator injury due to contact with live electrical cables.

Take precautions against the possible contact with third-party cables when accessing the track area reserved for the third-party utilities.

⚠ WARNING

Biohazard.

Operator injury due to contact with biohazardous liquids.

Take precautions against the possible contact with liquid that leaks from tubes of third parties when accessing the track area reserved for the third-party utilities.

5. Turn the main power switch to the right, toward the position A.

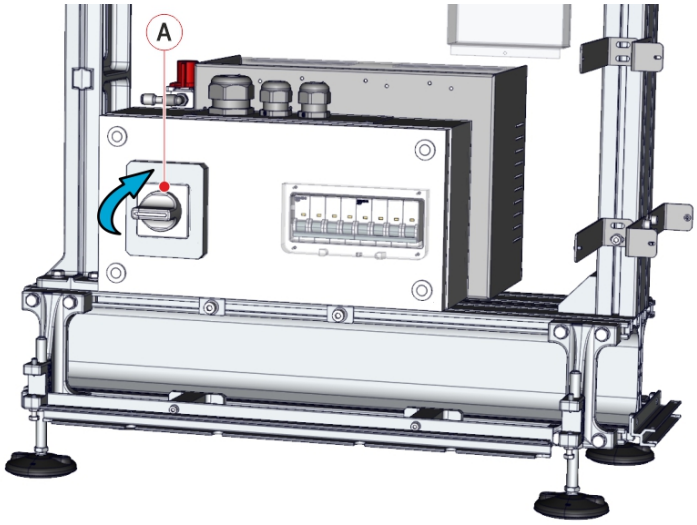

6. If the Automation System is equipped with more than one main power switch, operate all main power switches to restore power to the Automation System.
7. Restore the panel.

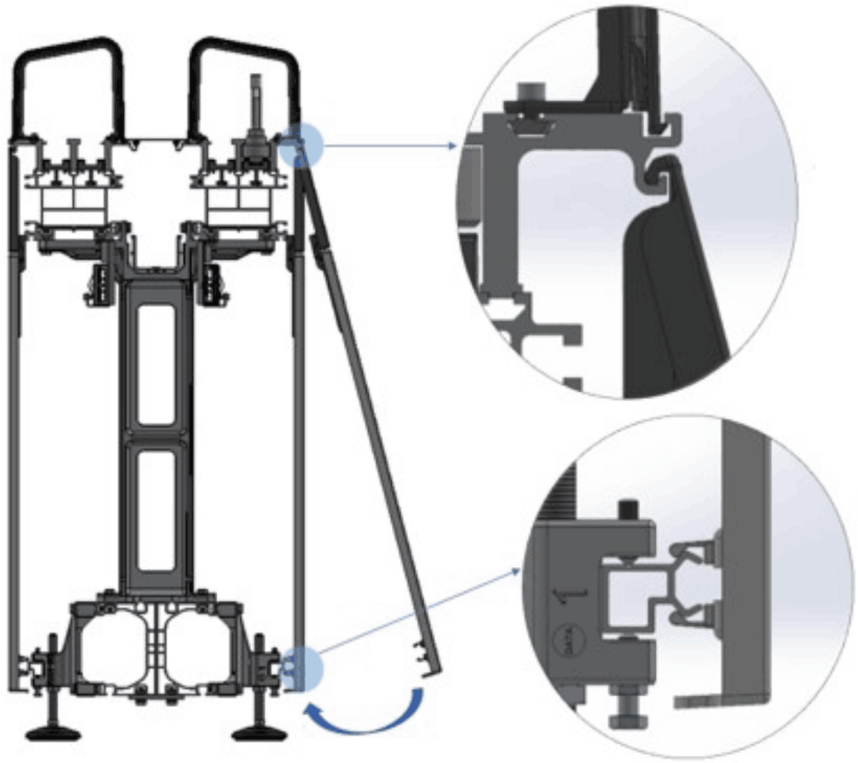

8. Wait 15 seconds.
9. Locate the Automation Software server. If necessary, contact the support.
10. Power on the Automation Software server.
11. From the `Overview` screen, click the `Start` button to start the track belts.

5.1.2.3 Verification steps

Verify that the carriers flow normally and that there are no jams along the track.

5.1.3 How to remove the sample tubes from the Automation System

This procedure describes how to remove the sample tubes from the Automation System.

The sample tubes can be manually removed from the Automation System in the event in which all the following conditions occur contemporaneously:

- Unexpected lack of incoming power
- Unexpected lack of air supply
- There are the samples on Automation System
- The Automation System power supply is going to be Off for a long period, this may cause possible damage to samples.

⚠ CAUTION

Do not manually remove the tubes if one of previous conditions does not occur. When the Automation System is turned on, the sample identification could be compromised if the tubes have been manually removed.

⚠ WARNING

Biohazard.

Sample tubes manipulation or accessing mechanical parts normally protected by safety covers allow access to biohazardous substances. Follow laboratory guidelines reference for handling sample tubes or biohazardous substances.

⚠ WARNING

Biohazard.

Possible sample contamination and spillage when handling sample tubes

⚠ CAUTION

Puncture and cutting hazard.

Accessing mechanical parts normally protected by safety covers can cause risks due to needles and/or sharp surfaces.

If any sample tubes need to be manually removed, perform the following procedure.

5.1.3.1 Prerequisites

Authorized personnel:	Operator
Conditions:	Automation System shut down
Tools and materials:	None
Procedures:	None

5.1.3.2 Task steps

1. Ensure that the Automation System is switched off.
2. Ensure the power supply is off.
3. Set all connected Analyzers in non-operational mode (refer to each specific Analyzer Operations Manual).
4. Open the security covers of Automation Modules and the connected Analyzers Interface Modules.
5. Manually remove all accessible sample tubes.
6. Close all security covers.
7. If samples on the Automation System are inaccessible, contact FSE to remove the upper covers over the track in order to reach the remaining sample tubes.
8. Restore all the covers.

5.1.3.3 Verification steps

Verify that the track cover are restores.

5.1.4 How to load the samples tube into racks

This procedure explains how to load the samples tube into racks.

5.1.4.1 Prerequisites

Authorized personnel:	Operator
Conditions:	None
Tools and materials:	None
Procedures:	None

5.1.4.2 Task steps

1. Verify the status of the rack. Do not use racks if the silicone tube supports are broken or missing. If a rack is damaged, discard it and contact a Service Assistance representative.
2. Place the first sample tube in column A, row 1 (A1). Insert the tube straight into a rack position, ensuring it is seated firmly against the bottom of the rack and not tilted.

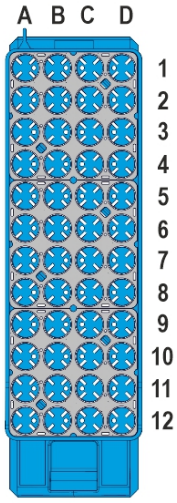

3. Proceed to fill the column A by placing each subsequent sample in the next row of the same column (A2, A3, etc). Do not skip any position of the column.
4. Proceed with the next column, filling each column before inserting a tube in the next (B1, B2, B3, etc).

5.1.4.3 Verification steps

Verify that the tubes in the racks are upright and centered.

5.1.5 How to log into Automation Software

This procedure describes how to log into the Automation Software.

The Automation Software allows multiple access by several client computers and by several users simultaneously.

With the same credentials, a User can achieve multiple independent accesses:

- on the same PC client (using multiple browser windows),
- or with simultaneous logins on different PC clients.

Independent access means that the disconnection of a single access does not close the other on-going connections, which remain active and must be terminated separately.

If multiple tabs are opened on a single browser window, the same user must be used to perform the login in all the tabs.

If configured, Automation Software can lock out the User after a defined number of failed login attempts. Contact your Technical Assistance Staff for unlocking locked Users due to failed login attempts.

If configured, Automation Software can manage the User password expiration. In this case, User will receive a password expiry notice before the password expiration.

If configured, it is also possible to access the DMS through LDAP-server.

5.1.5.1 Prerequisites

Authorized personnel:	Personnel authorized by the Laboratory manager (or the staff members of the technical support service)
Conditions:	Automation Software started
Tools and materials:	Client PC with Google Chrome version 92 (or newer) browser or Microsoft Edge version 102 (or newer) browser
Procedures:	None

5.1.5.2 Task steps

1. Open a browser session on client PC and type the IP address of the UI.
2. Enter your personal access details (username and password) previously provided by the Laboratory manager (or by the staff members of the technical support service).

Figure 51:

Login credential can be entered by using:

- the computer keyboard
- a virtual touch keyboard (for use with touch-screens monitors) that appears as a pop-up when one of the related keyboard buttons is selected (Figure 51 – A).

3. Select the `Sign in` button (Figure 51 – B).

NOTE
If the Multisite option is enabled, the list of configured Sites will be additionally displayed in the login page, under the `Sign in` button (Figure 51 – B). In this case, besides entering username and password, the User must also check at least one site (for which he has received proper permissions) from the list. If the User selects a Site where he has no permissions, or does not select any Site, the login will be refused. An exception to this rule is for the Head Physician user (and technical assistance user), that can ignore the Site choice in case he/she wants to login automatically on all Sites.

5.1.5.3 Verification steps

Verify that UI is displayed.

If you start the Automation Software for first time, the End-User License Agreement is displayed.

5.1.6 How to log out of the Automation Software

This procedure describes how to log out of the Automation Software.

5.1.6.1 Prerequisites

Authorized personnel:	Operator
Conditions:	Automation System powered up
Tools and materials:	None
Procedures:	None

5.1.6.2 Task steps

1. From the User menu of the multifunctional toolbar, select `Logout`.

5.1.6.3 Verification steps

Verify that the login page is displayed.

5.1.7 How to start the Automation System

This procedure describes how to start the Automation System or to resume processing samples from Pause mode.

NOTICE

After 5 minutes of inactivity (and within 10 minutes of inactivity) the Automation track stops and the tube carrier movement is paused. To resume running, select the `Start` button.

5.1.7.1 Prerequisites

Authorized personnel:	Operator
Conditions:	Automation System paused
Tools and materials:	None
Procedures:	None

5.1.7.2 Task steps

Select the `Start` button in the Overview bar.

5.1.7.3 Verification steps

Verify that the current state is “ ▶ ”.

5.1.8 How to pause the Automation System

This procedure describes how to pause the Automation System.

NOTE
When in pause mode, the Automation System still maintains the communication with Modules, Analyzers and Host.

5.1.8.1 Prerequisites

Authorized personnel:	Operator
Conditions:	Automation System started
Tools and materials:	None
Procedures:	None

5.1.8.2 Task steps

Select the `Pause` button in the Overview bar.

When the `Pause` button is selected, the following actions take place before each module is set in pause.

Table 143:

Modules	Description
Interface Module – Point of Space Analyzer	Completes aspiration of the sample currently at the sampling location.
Interface Module – Pick & Place Analyzer	Completes loading or unloading movement of the sample tube currently in the Robot gripper.
Input/Output Module	Completes loading or unloading movement of the sample tube currently in the Robot gripper.
Rack Input Module	Completes loading movement of the sample tube currently in the Robot gripper.
Bulk Input Module	Completes loading movement of the sample tube currently in the Robot gripper.

Table 143 (cont'd.)

Modules	Description
Centrifuge Module	Completes loading or unloading movement of the sample tube currently in the Robot gripper. If a centrifugation process is started, it will be completed without being interrupted.
Decapper Module	Completes decapping the sample tube currently in process.
Desealer Module	Completes desealing the sample tube currently in process.
Storage and Retrieval Module	Completes loading or unloading movement of the sample tube currently in the Robot gripper.
Sealer Module	Completes sealing the sample tube currently in process.
Recapper Module	Completes recapping the sample tube currently in process.
Track	After 5 minutes of inactivity (and within 10 minutes of inactivity), the track motors are turned off.

5.1.8.3 Verification steps

Tube routing on Track is interrupted. Verify that the current state is “ **II** ”.

5.1.9 How to change the status of a Module

This procedure describes how to change the status of a Module (Interface Module).

NOTE

If configured, only the FSE can take the control of a Module locked by another User for Diagnostics. In this case a popup with `Permission Denied` message is displayed.

5.1.9.1 Prerequisites

Authorized personnel:	Operator
Conditions:	None
Tools and materials:	None
Procedures:	None

5.1.9.2 Task steps

- To set a Module offline, refer to 5.1.10 *How to set a Module offline*, page 339
- To set a Module online or offline, click on the correspondent Module card and select the function button `On-line` / `Off-line`.
- To set a Module online or offline, click the icon " ▸ " of the Module card in the `Overview` / `Cards` screen.

NOTICE

Switching to Off-line status by using the icon " ▸ ", the Automation Software performs the Off-line Without Flush by default.

5.1.9.3 Verification steps

Verify that the status of the Module is Off-line/On-line.

5.1.10 How to set a Module offline

This procedure describes how to set a Module to offline mode.

5.1.10.1 Prerequisites

Authorized personnel:	Operator
Conditions:	None
Tools and materials:	None
Procedures:	None

5.1.10.2 Task steps

1. Click on `Overview`
2. Click on the Module to be set to Offline
3. Click on `Status`
4. Depending on the scenario, click on the relevant function button

Function button	Option	Description
`Off-line`	`Flush Carriers`	Carriers are flushed out of the buffer lane, then the Module changes to Offline.
	`Do not Flush`	The Module changes to Offline without flushing out carriers of the buffer lane.
`Going Off-line` [33]	`Now`	Module completes processing samples currently inside the Module and then changes to Offline status. No new samples are routed to the Module.
	`Scheduled Time`	It is possible to schedule when the command `Going Off-line` is executed.

5.1.10.3 Verification steps

Verify that the status of the Module is Off-line.

33. Not available for all Modules.

5.1.11 How to do the controlled shutdown of the Automation System

This procedure describes how to do the controlled shutdown of the Automation System.

The controlled shutdown is used to:

- Perform routine maintenance
- Perform troubleshooting diagnostic procedures

5.1.11.1 Prerequisites

Authorized personnel:	Operator
Conditions:	Automation System powered up
Tools and materials:	None
Procedures:	None

5.1.11.2 Task steps

1. Remove all samples from the Automation System. If necessary, refer to 5.1.14 *How to purge the Automation System of sample tubes*, page 349.
2. Remove all samples from the Centrifuge Module if required. Refer to 5.5.6 *How to do the emergency shutdown of the Centrifuge Module*, page 408.
3. Set all Automation Modules and Interface Modules to Offline. Refer to 5.1.10 *How to set a Module offline*, page 339. It is suggested to execute the command `Going Off-line` when applicable.

   NOTE

   In case a Module is in error, perform the recovery steps posted on UI.

   If one or more Modules are in error condition at the shutdown, the Automation Software will ask confirmation before shutdown. If shutdown is anyhow confirmed, the Software, at the next startup, will leave Off-line the Modules that were in error condition at the previous shutdown.

4. Unlock and remove all racks (if any) located in IOM lanes.
5. Shutdown the Automation Software as follows:
   a. In the `Automation` menu, press the `System` button.
   b. Select the `Utilities` tab.
   c. Press the button `Shutdown` .
   d. Press `Yes` to confirm.
   e. Wait until the Automation Software is closed.

NOTE

The shutdown command will shut down the SMS server.

6. If the Automation System is equipped with Panel PC, access all Panel PCs and turn them off as follows:
   a. Logout from the Automation Software. Refer to 5.1.6 *How to log out of the Automation Software*, page 334.
   b. Turn off the Panel PC.
7. Remove the power from Automation System. Locate the main power switch of the Automation System and remove the panel to access.

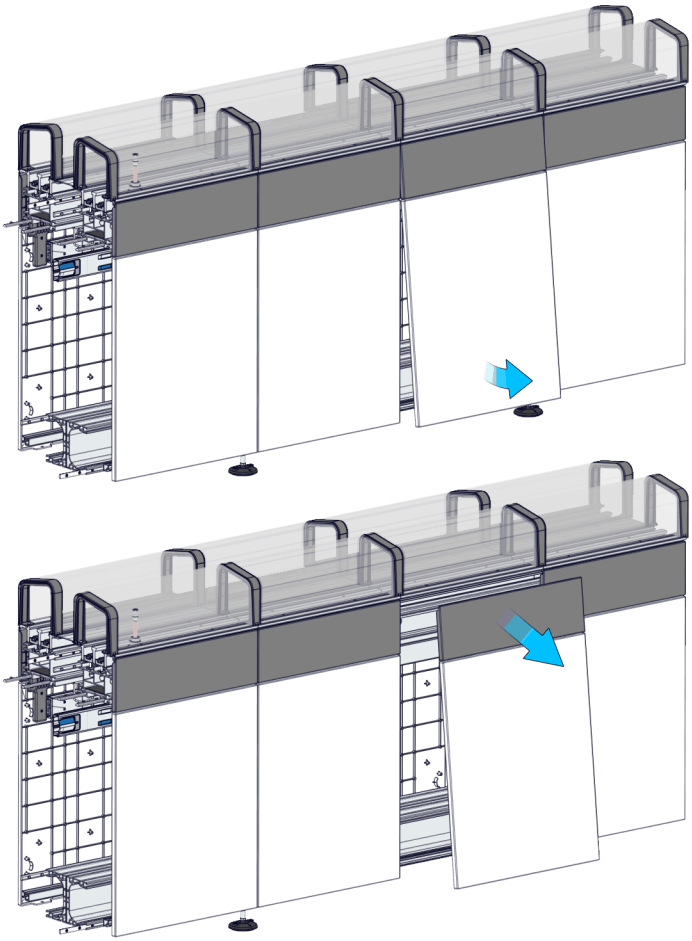

⚠ WARNING

Electrical hazard.

Operator injury due to contact with live electrical cables.

Take precautions against the possible contact with third-party cables when accessing the track area reserved for the third-party utilities.

⚠ WARNING

Biohazard.

Operator injury due to contact with biohazardous liquids.

Take precautions against the possible contact with liquid that leaks from tubes of third parties when accessing the track area reserved for the third-party utilities.

8. Turn the main power switch to the left, toward the position A.

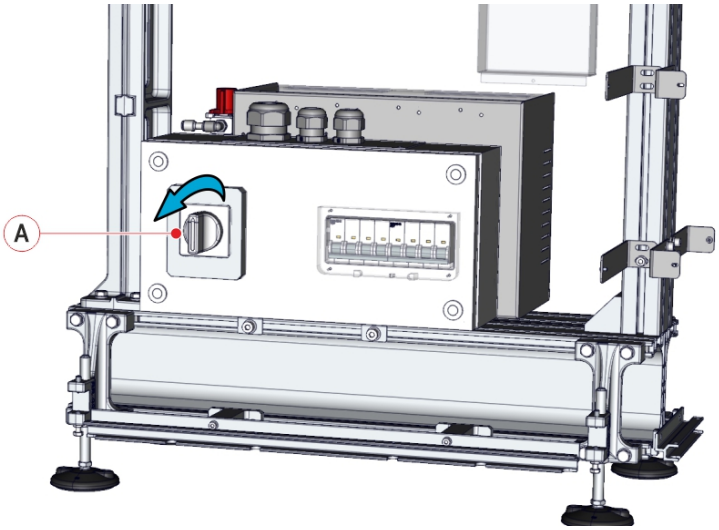

9. If the Automation System is equipped with more than one Main Power Switch, operate all Main Power Switches to remove power to the Automation System.
10. Restore the panel.

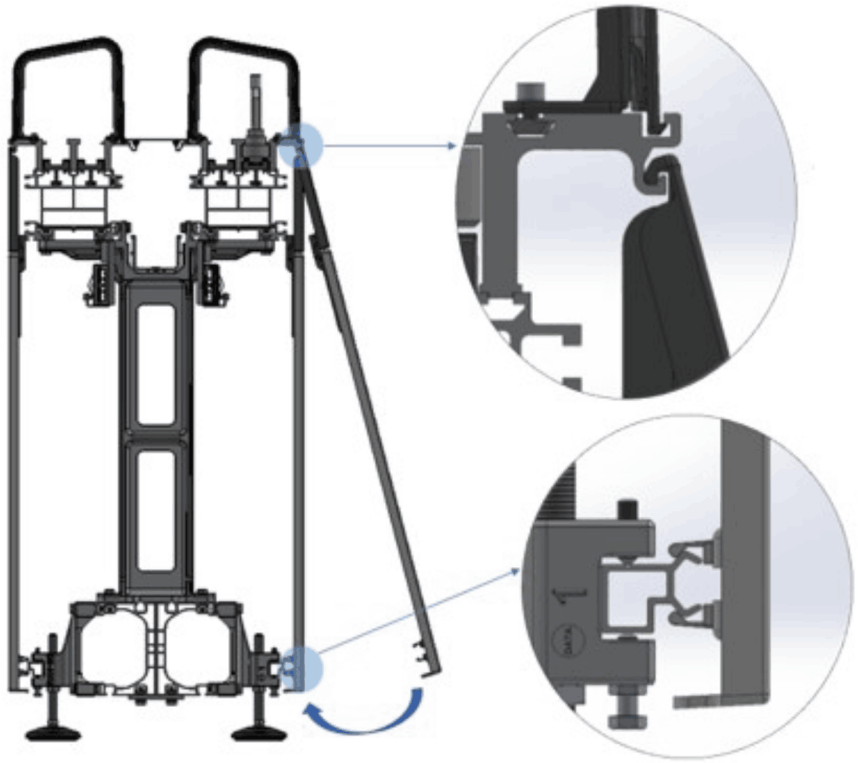

5.1.11.3 Verification steps

Verify that the Automation System is shut down.

5.1.12 How to do the emergency shutdown of the Automation System

This procedure describes how to do the emergency shutdown of the Automation System.

The emergency shutdown is a safety feature intended to power down the entire installation in an emergency so as to protect personnel and equipment. Some of the causes requiring this kind of shutdown include fire, flood, HVAC (Heating, Ventilation and Air Conditioning) failure resulting in overheating of sensitive equipment, etc.

NOTICE

The samples integrity could be affected if tubes are left on Automation System after turning off the power supply. Refer to the laboratory guidelines for more information about sample preparation and storage.

NOTICE

Check that no tube is left inside each Module. Not removing tubes from Modules may cause sample deterioration.

5.1.12.1 Prerequisites

Authorized personnel:	Only trained operators are allowed to reach and operate the Main Power Switch for the sole purpose of shutting down the Automation System.
Conditions:	Automation System powered up
Tools and materials:	None
Procedures:	None

5.1.12.2 Task steps

1. Locate the main power switch of the Automation System and remove the panel to access.

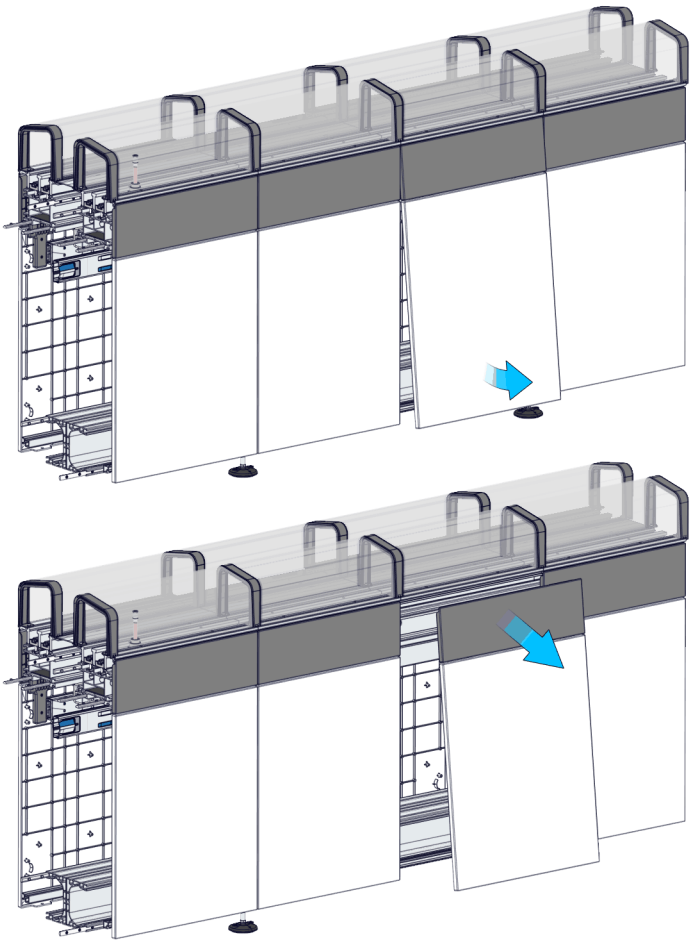

⚠ WARNING

Electrical hazard.

Operator injury due to contact with live electrical cables.

Take precautions against the possible contact with third-party cables when accessing the track area reserved for the third-party utilities.

⚠ WARNING

Biohazard.

Operator injury due to contact with biohazardous liquids.

Take precautions against the possible contact with liquid that leaks from tubes of third parties when accessing the track area reserved for the third-party utilities.

2. Turn the main power switch to the left, toward the position A.

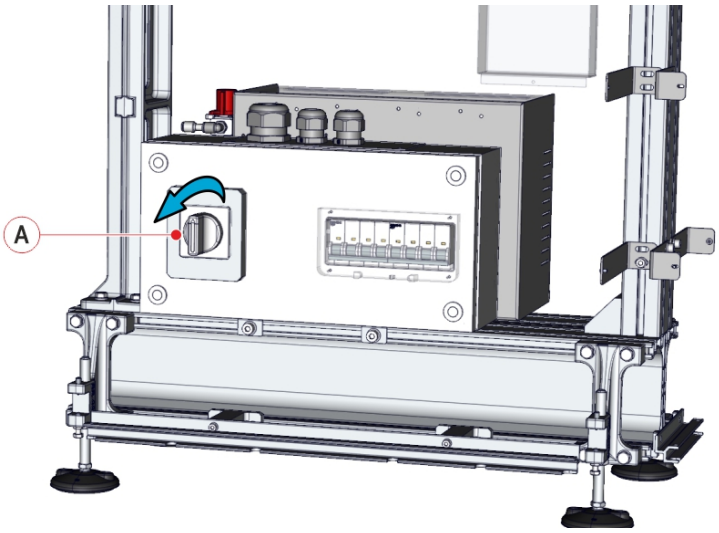

3. If the Automation System is equipped with more than one Main Power Switch, operate all Main Power Switches to remove power to the Automation System.
4. Restore the panel.

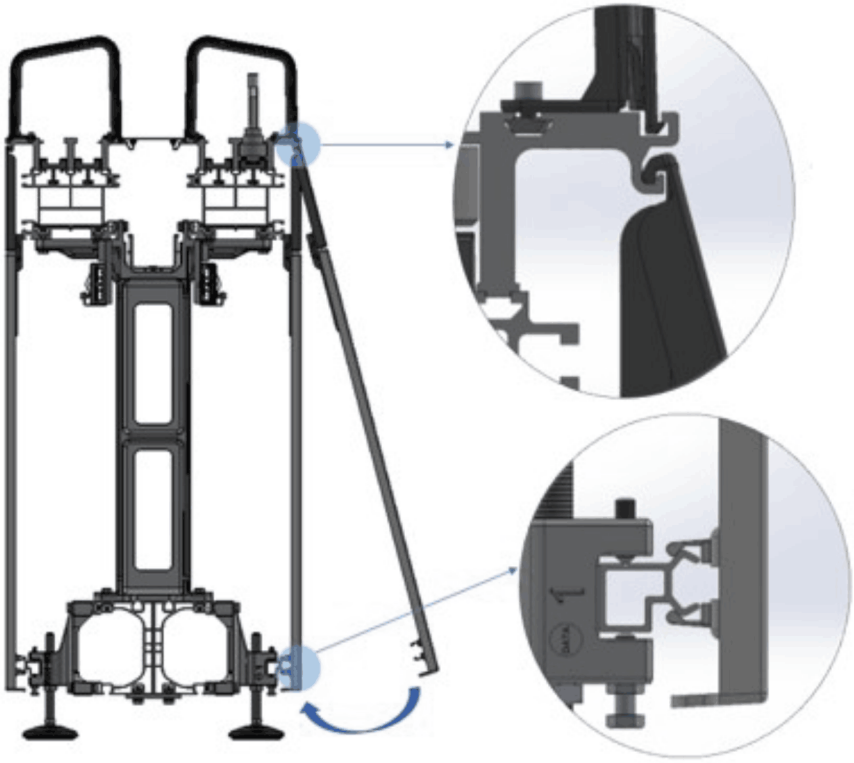

5. Do the emergency shutdown of Storage and Retrieval Module (5.9.1 *How to do the emergency shutdown of the Storage and Retrieval Module*, page 423), if present.
6. Do the emergency shutdown of Centrifuge Module (5.5.6 *How to do the emergency shutdown of the Centrifuge Module*, page 408), if present.

5.1.12.3 Verification steps

Verify that the Automation System is shut down.

5.1.13 How to unload sample tubes from the Automation System

This procedure describes how to unload sample tubes from the Automation System to the Priority Output racks of the Input/Output Module.

5.1.13.1 Prerequisites

Authorized personnel:	Laboratory Technician
Conditions:	• Automation System powered up • Racks configured as Priority Output
Tools and materials:	None
Procedures:	None

5.1.13.2 Task steps

1. Select the `Routine` / `Search` button.
2. In the filter `Patient list` – `SID`, enter the ID of the sample tube to be unloaded.
3. Select the `Search` button.
4. Select all the tests of the relevant sample ID and press the `Command` / `Delivery` button.

NOTE

When the delivery request on the sample tube is performed, the tube will no more be processed by any Automation module or connected Analyzer; only the current process will be completed.

NOTE

If the sample tube is located into the Centrifuge Module, it will complete its centrifugation process and then routed to the Priority Output rack without being routed to any analyzer.

5.1.13.3 Verification steps

Verify that the sample tubes are unloaded to the Priority Output racks of the Input/Output Module.

5.1.14 How to purge the Automation System of sample tubes

This procedure describes how to remove all samples from the Automation System (purge operation).

5.1.14.1 Prerequisites

Authorized personnel:	Operator
Conditions:	Automation System powered up
Tools and materials:	None
Procedures:	None

5.1.14.2 Task steps

1. Insert empty racks in IOM lanes configured for Priority Output.
2. In the `Automation` menu, press the `System` button.
3. Select the `Utilities` tab.
4. Press the `Purge` button.
5. Type `YES` to confirm and press `Save`: the Automation shall start unloading the samples tubes to the IOM Priority Output racks.
6. Remove all full Priority Output racks from the Priority Output lanes and remove the sample tubes.
7. Reinsert the empty racks on lanes for Priority Output and repeat until all samples have been unloaded from track.

To interrupt the purge operation:

1. In the `Automation` menu, press the `System` button.
2. Select the `Utilities` tab.
3. Press the `Purge` button and confirm the `Quit Purge` popup.

All samples present on track at the moment of the `Purge` command shall be unload from the Automation System, but the `Quit Purge` command permits to load new samples on track. These new samples will not be unloaded from track.

5.1.14.3 Verification steps

None.

5.1.15 How to manage the error recoveries

This procedure describes how to recover a Module or an Interface Module in error condition.

NOTE
For the list of the latest warnings or errors occurred on the Automation System refer to 4.10.2 *Exceptions*, page 266.

5.1.15.1 Prerequisites

Authorized personnel:	Operator
Conditions:	Module or an Interface Module in error condition.
Tools and materials:	None
Procedures:	None

5.1.15.2 Task steps

1. Press `Overview` / `Cards` button
2. Select the card of the Module or Interface Module in error.
3. The card displays the error occurred on the Module or Interface Module (Figure 52 – A) in the `Status` screen.

Figure 52:

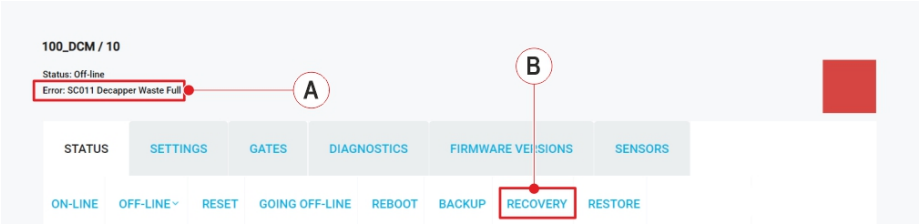

4. Select the `Recovery` function button (Figure 52 – B).
5. The screen with the explanation of the error is displayed.

Figure 53:

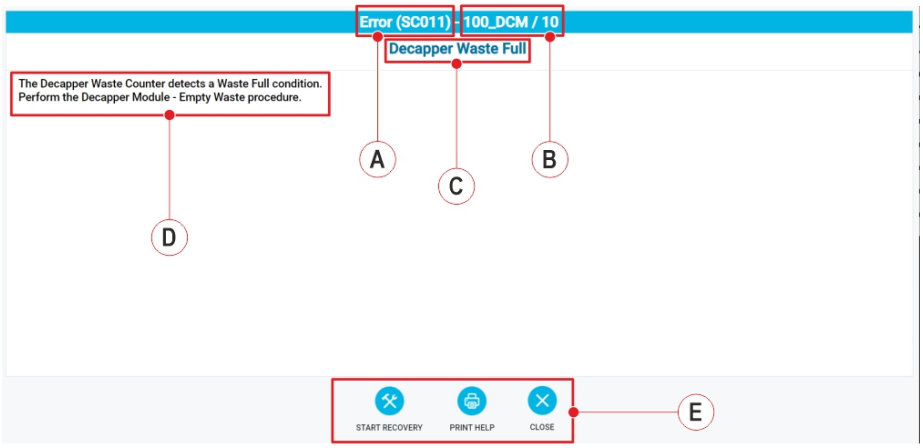

The screen contains:

- Error code (Figure 53 – A).
- Module or Interface Module with its instance (Figure 53 – B).
- Error message (Figure 53 – C).
- Error recovery instructions (Figure 53 – D).
- Function buttons (Figure 53 – E)

Function button	Description
`Start Recovery`	Starts the guided step-by-step recovery.
`Print help`	Prints the error recovery instructions to the default printer.
`Close`	Closes the pop-up.

6. Select the `Start Recovery` button to execute the guided step-by-step recovery.
7. If the recovery is successfully executed, the error is automatically reset.

   In case a guided error recovery does not solve the error condition, perform the recovery again. In case the error persists, contact the Service Assistance.

5.1.15.3 Verification steps

Verify that the Module or the Interface Module has recovered the error.

5.1.16 How to print the configurations

This procedure describes how to print the DMS configurations.

NOTICE

Print a copy of the configurations for approval by technical assistance staff. The technical assistance staff is responsible for the DMS configurations. The technical assistance staff shall verify the configurations before starting the routine samples processing.

5.1.16.1 Prerequisites

Authorized personnel:	Supervisor
Conditions:	None
Tools and materials:	None
Procedures:	None

5.1.16.2 Task steps

In the `Utility` menu, click on `Print Configurations` and choose:

- `Print Test Map` to print a PDF file with the list of configured tests.
- `Print Normal Values` to print a PDF file with the list of configured normal values.
- `Print Gem` to print to print a PDF file with the list of configured GEM rules.
- `Print Decision Making` to print a PDF file with the list of configured Decision Making rules.

5.1.16.3 Verification steps

None.

5.1.17 How to search for samples

This procedure describes how to search sample tubes.

5.1.17.1 Prerequisites

Authorized personnel:	Laboratory Technician
Conditions:	None
Tools and materials:	None
Procedures:	None

5.1.17.2 Task steps

5.1.17.2.1 By the Rapid search bar

1. Select from the drop-down menu the type of data to search for (SID, Order, Lastname, Patient ID);
2. Type at least the first 3 characters of the data into the Rapid box, otherwise select the arrow from the drop-down menu. If there are numerous matches found, the pop-up is divided into further pages, which can be consulted by means of the special pop-up navigation buttons. Alternatively, by continuing to type in further characters, it is possible to narrow the search results;
3. Select a specific result from the pop-up to display the Validation screen, otherwise click on the Search icon to open the pages of all the matches found. From the pop-up it is possible to:
   - Select a SID number: the software opens the Validation screen containing only the information relating to the sample.
   - Select any another field: the software opens the Validation screen containing all the information (samples and tests) relating to the Order (OID).

5.1.17.2.2 By the Extended search

1. In the `Routine` menu, click on `Search`.
2. Click on `Clear Filter` to delete any filters potentially active during the previous search operation.
3. Insert the search criteria.
4. Choose the specific search location.

NOTE

When searching in Historic Archive, it is mandatory to insert at least a value in `Patient list` filter or a a valid range date [34] in `Date and Time` filter. If not, the search is not performed and a pop-up warns the User to refine the search.

34. Data range limited by the option "Max days for archive searches" set.

5. Click on `Search` to display the Validation screen with the orders that match the search criteria. Alternatively, click on `Snapshot` to display a summary preview of samples.

5.1.17.2.3 Search of samples in trays of Input/Output Module configured as GPI

In case of the Input/Output Module configured as GPI is installed, it is possible to filter by tray identifier in order to retrieve the list of the samples contained in the selected tray.

1. In the `Routine` menu, click on `Search`.
2. In the panel `Location`, select `Rack-Tray` for the field `Type`.
3. Insert the tray identifier in the field `ID` (e.g. DXI1_123456789, for IOMs configured as GPI).
4. It is also possible to specify the `Lane` field as a selection criteria. In case of IOMs configured as GPI, the leftmost lane occupied by the tray should be used.
5. It is also possible to specify absolute position in the `Position` field as a selection criteria., In case of IOMs configured as GPI, this value should be inserted according to the rows/columns of the specific tray.

In the Snapshot screen, the field `Location` reports the "R" prefix for the Inpeco Rack (e.g. R123456789) or tray type along with the Rack ID in case of IOMs configured as GPI (e.g. DXI1_123456789).

5.1.17.2.4 Search of samples in racks of Storage and Retrieval Module

It is possible to search tubes located in the racks of the Storage and Retrieval Module.

Note that:

- The storing racks (i.e. standard racks of Storage and Retrieval Module) are identified by the character 'S' in the rack ID.
- The parking racks are identified by the characters 'PS' in the rack ID.

1. In the `Routine` menu, click on `Search`.
2. In the panel `Location`:
   - Select `On-Track` for the field `Status` (Figure 54 – A).
   - in the field `Node` insert the Module (or Node) of the Storage and Retrieval Module where to search the samples (Figure 54 – B).

Figure 54:

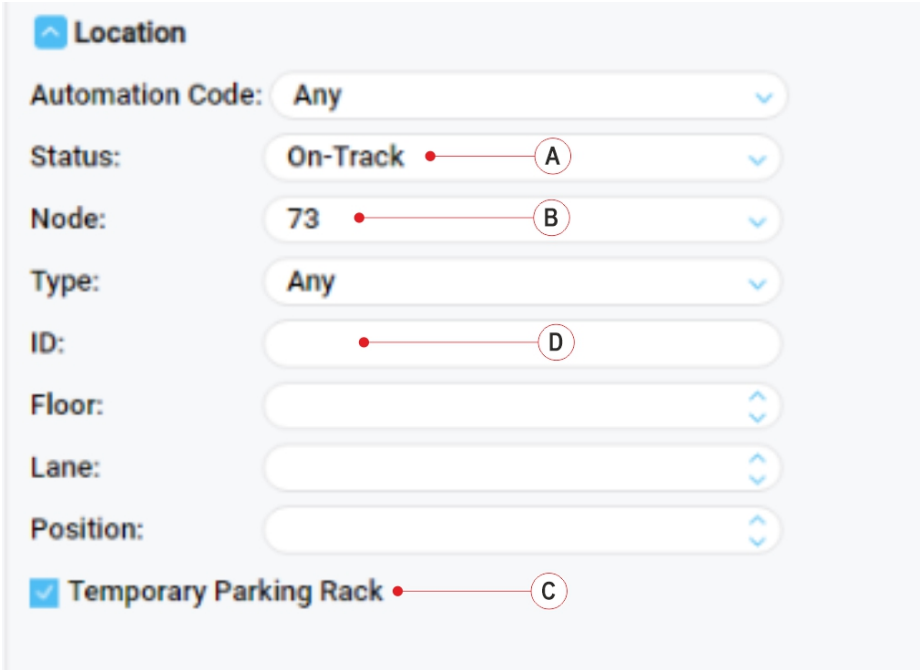

3. The checkbox `Temporary Parking Rack` (Figure 54 – C) is displayed.
4. Depending on the filters configured, DMS software searches the expected samples.

Temporary Parking Rack (Figure 54 – C)	ID (Figure 54 – D)	Description
Is NOT selected	Empty	Allows to search tubes located in all the storing and parking racks of the Storage and Retrieval Module.
	Specified rack ID (e.g. S12345)	Allows to search the tubes located in the specified storing rack (e.g. S12345). [35]
Is selected	Empty	Allows to search tubes located in all the parking racks of the Storage and Retrieval Module (the search is not performed in the storing racks).
	Specified rack ID (e.g. PS1234)	Allows to search the tubes located in the specified parking rack (e.g. PS1234). [36]

5. Press `Search` or `Snapshot`.

35. The length of Rack ID is always of 6 characters. Thus, in case of entering S12 in the ID field, DMS software will consider the ID as 000S12.
36. The length of Rack ID is always of 6 characters. Thus, in case of entering PS12 in the ID field, DMS software will consider the ID as P00S12.

5.1.17.3 Verification steps

The Validation screen (or the Snapshot screen) is displayed with the expected samples.

5.2 Input/Output Module

NOTICE

Disclaimer.

All the operations described hereafter refer to racks intended as Inpeco racks. Unless otherwise specified, these operations are also valid for customized trays containing Analyzer racks.

5.2.1 How to configure the lanes of the Input/Output Module

The following procedure describes how to configure the IOM lanes.

5.2.1.1 Prerequisites

Authorized personnel:	Supervisor
Conditions:	No rack inserted on the lane
Tools and materials:	None
Procedures:	None

5.2.1.2 Task steps

1. In the `Overview` screen, click on the lane (without rack inserted) to be configured.
2. If applicable, click on `Tray Configuration` tab (Figure 55 – A) and choose the type of tray or the Inpeco rack (Figure 55 – B). The selected option is displayed in Figure 55 – C.

NOTICE

For the selected lane, it is possible to select only the tray that can actually be contained on the available lanes.

Figure 55:

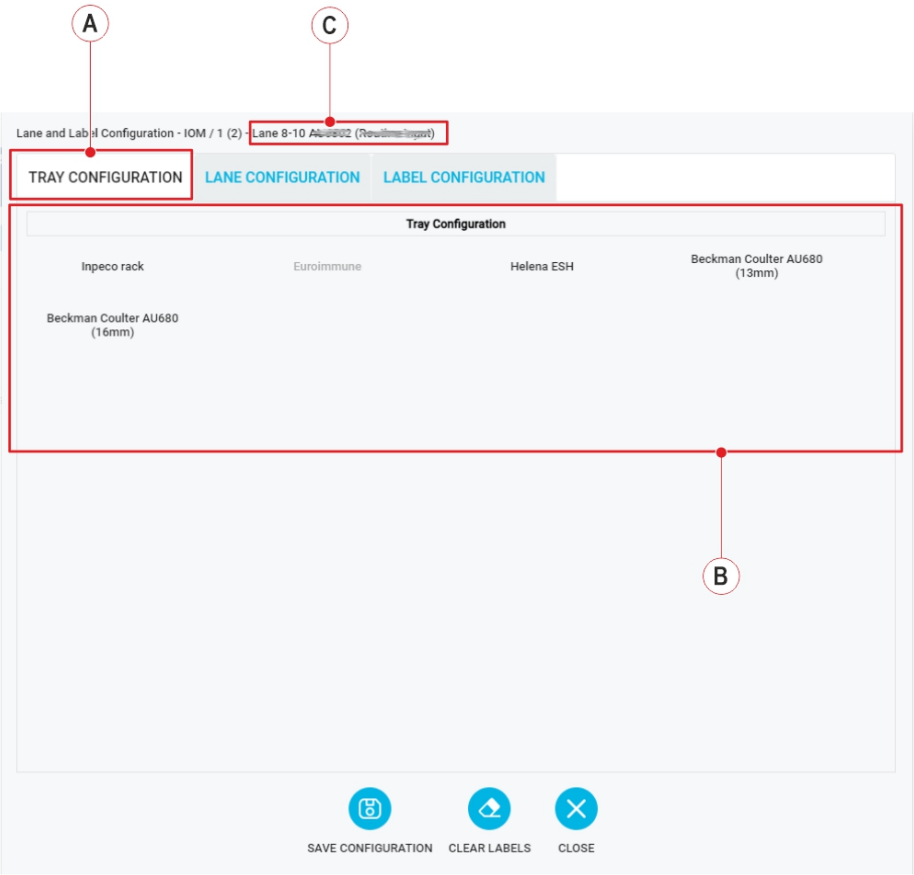

3. Click on `Lane Configuration` tab (Figure 56 – A) and choose the lane configuration (Figure 56 – B). The selected option is displayed in Figure 56 – C.

Figure 56:

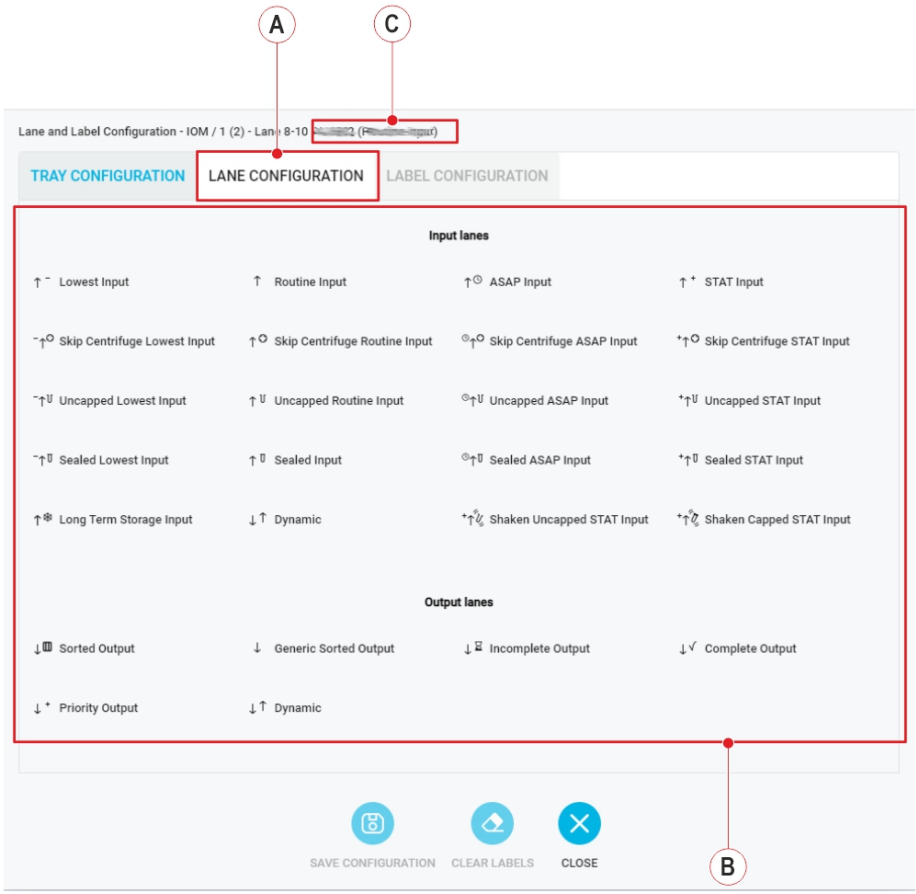

In case of choice of a tray different from `Inpeco Rack`, it is possible to choose the `Dynamic Lane` [37] as Input lane by means of the check box (Figure 57 – A). In this case, it is only possible to choose `Sorted Output` as Output lane (Figure 57 – B).

37. A Dynamic Input Lane represents a lane that is initially configured as an Input Lane, but once the tray is empty, this lane becomes automatically a “Sorted Output Lane.

Figure 57:

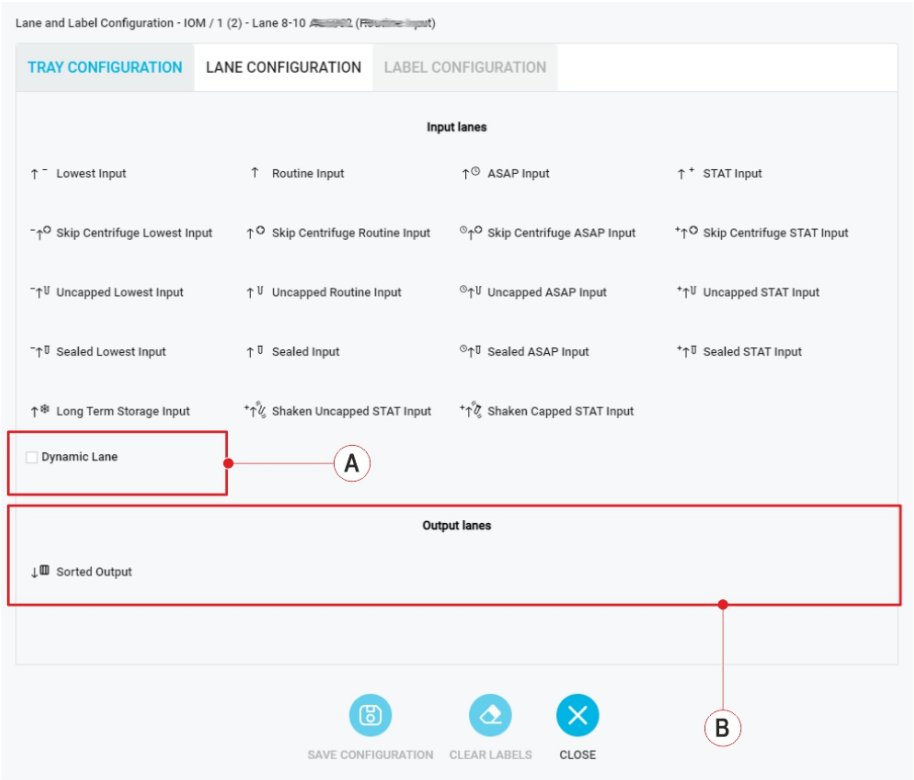

4. Click on `Label Configuration` tab (Figure 58 – A) to insert a mnemonic string to identify the columns of the rack [38](Figure 58 – C).

NOTICE
Pay attention to following restrictions for labels: • labels can contain a maximum of 23 characters • letters with accents, dieresis or special letters (e.g. ß, æ) are not allowed • symbols `|`, `;`, `<`, `>`, `^` are not allowed

38. In case of tray inserted, each rack represents a column.

Figure 58:

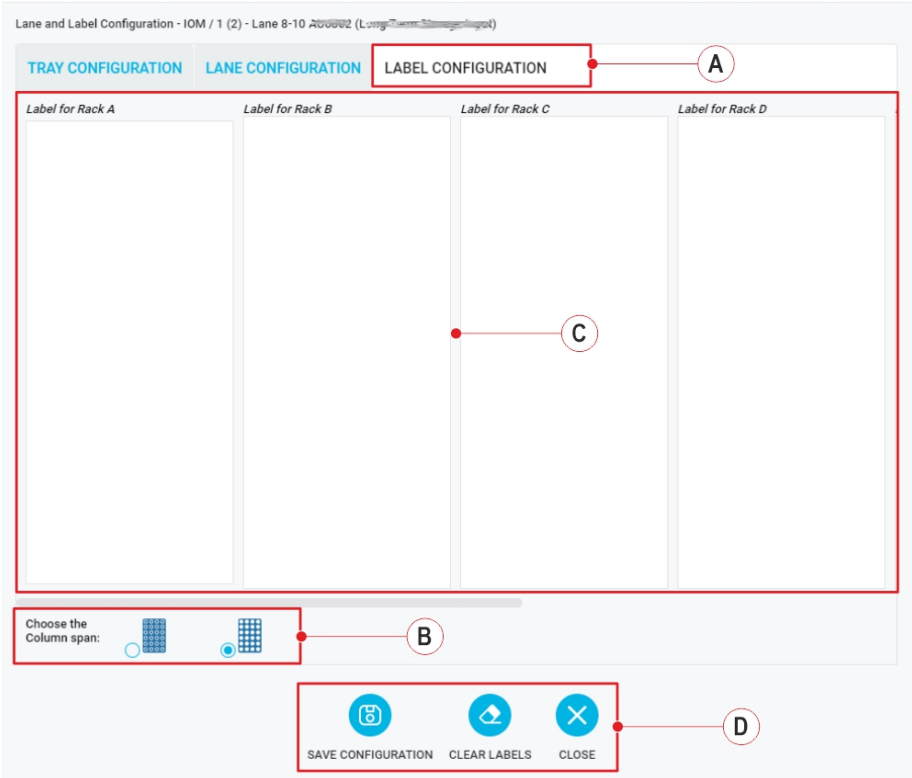

5. According to the option `Choose the Column span` selected (Figure 58 – B), the number of label can be:
   - 4 (one label for each column) or 1 (a single label configured for the whole rack), in case of the Inpeco rack.
   - variable (one label for each column [39]) or 1 (a single label configured for the whole rack), based on the selected tray.
6. In case the lane is configured as `Sorted Output`, the list of all sorting tests configured for the specified rack [39] is displayed (Figure 59 – A).

   Furthermore, the button `Manage sorting tests` (Figure 59 – B) allows to navigate to `Automation` / `Sorting Tests` screen where it is possible to check or modify the sorting tests currently available.

39. In case of tray inserted, each rack represents a column.

Figure 59:

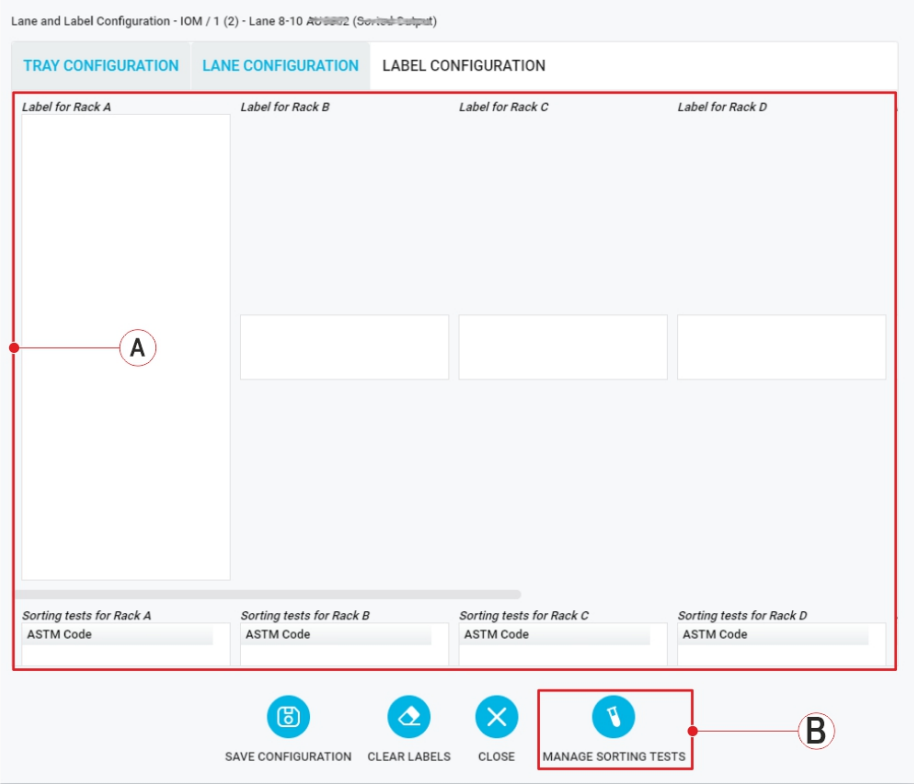

7. Click on `Save Configuration` (Figure 58 – D).[40]

NOTE
Click on `Clear labels` to clear the strings inserted in Figure 58 – D.

5.2.1.3 Verification steps

To verify the lane configurations:

- Click on the lane configuration icon in `Overview` screen. A tooltip shows the following information:
  - nodeName (Input/Output)
  - node instance
  - node ID
  - lane ID reserved for Inpeco rack or lane IDs reserved for the customized tray with the information of the tray type
  - lane configuration type
  - labels for each column/rack
- Click on `Show IOM Labels` button in `Overview` screen. A pop-up opens to show all labels and configurations of all 16 lanes.

40. The button is disabled if at least one label field contains invalid symbols.

NOTE

The `Export CSV` button allows to export a file with the configuration and related labels for all the lanes. The file exported includes also the node ID and the instrument name.

The downloaded file is without extension. Add the csv extension to file prior to open it.

- Read the lane configuration on the display bar.

5.2.2 How to add sorting tests to Input/Output Module lanes

The following procedure describes how to add sorting tests to the lanes of the Input/Output Module.

5.2.2.1 Prerequisites

Authorized personnel:	Supervisor
Conditions:	None
Tools and materials:	None
Procedures:	None

5.2.2.2 Task steps

1. In the `Setup` menu, click on `Configurator` - `Automation Tests` .
2. Click on `Sorting Tests` tab.
3. Click on `Add` button to insert a new Sorting Test.
4. When done, click on `Save` button.

In case of Input/Output Module configured as GPI, it is possible to configure sorting tests to trays containing more than 4 racks (i.e. by entering a letter higher than “D” (from “E” to “Z”) in the field `Sorting Lanes`). When saving this type of configuration, a non-blocking popup message will be displayed to warn User that these configuration will have effect only for Trays that contains more than 4 racks (the message box will report the list of sorting tests configured in the same way).

In case of Input/Output Module configured as GPI, it is only possible to configure sorting tests by specifying the lane number (or range of lanes configured for the tray) along with the rack letter in the field `Sorting Lanes` (e.g. 3-10G).

NOTICE

In case the field `Sorting Lanes` is left empty, a pop-up error appears to inform the User about the Syntax error on invalid sorting lane.

5.2.2.3 Verification steps

None.

5.2.3 How to load the Analyzer racks to the trays

The following procedure describes how to load specific Analyzer racks - not provided by the System - to the trays.

5.2.3.1 Prerequisites

Authorized personnel:	Operator
Conditions:	None
Tools and materials:	None
Procedures:	None

5.2.3.2 Task steps

1. Lift up both the levers (Figure 60 – A) placed on the sides of the tray.

   Figure 60:

   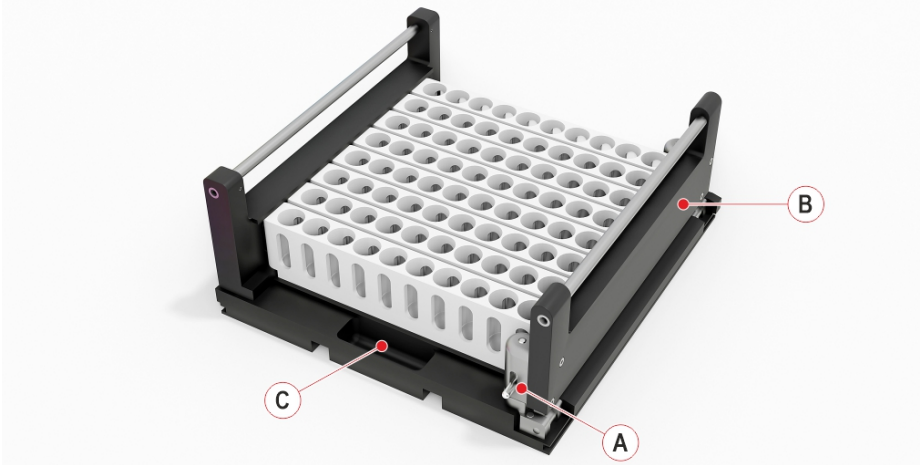

2. Lower the side (Figure 60 – B) of the tray.
3. Position the tray so the tag identifying the tray (Figure 60 – C) is facing to you.
4. Each rack location is identified by a number. Insert the racks in the tray so that the numbering of the rack locations starts from the left.

   Use the tray specific for the type of Analyzer rack. Refer toTable 147 *Customized trays*, page 434 to ensure the correct match between tube type-rack and rack-tray.
5. Lift up the side (Figure 60 – B) of the tray.

5.2.3.3 Verification steps

None.

5.2.4 How to load the output racks to the Input/Output Module

The following procedure describes how to load the output racks to the Module.

NOTICE
Load racks to the Input/Output Module in accordance with the lane configurations.

5.2.4.1 Prerequisites

Authorized personnel:	Operator
Conditions:	• No rack inserted on the lane. • Lane configured as output lane. • If applicable, tray completely loaded of empty racks.
Tools and materials:	None
Procedures:	Follow the procedure 5.2.1 *How to configure the lanes of the Input/Output Module*, page 357.

5.2.4.2 Task steps

1. Grasp an empty rack by the handle and position the rack so the handle is facing to you.

   In case of loading of a tray, position the tray so the tag identifying the tray is facing to you.
2. Place the rack flat on the worktable.
3. Align the edge of the rack with the guides on the worktable.
4. Slide the rack into the lane.

In case of loading of a tray, insert the tray starting from the first lane assigned to the tray. Refer to the procedure 5.2.1 *How to configure the lanes of the Input/Output Module*, page 357. Example: Lanes 5 and 6 are reserved for the tray (Figure 61 – A). Therefore, the tray (Figure 61 – A) must be inserted starting from Lane 5 (Figure 61 – B).

Figure 61:

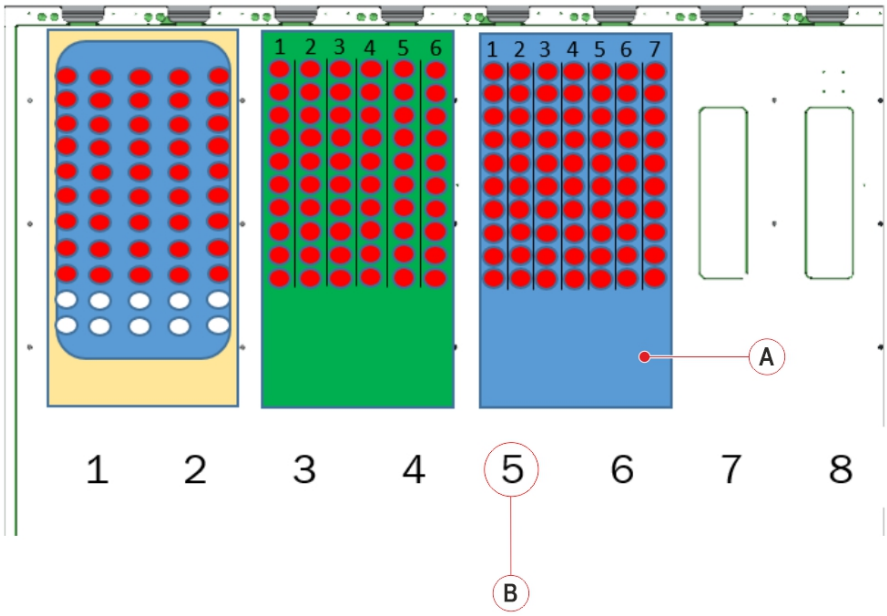

5. Push firmly until the rack clicks into position.

⚠ WARNING

Pinch Hazard.

Do not reach the area under the display bar. You could be injured if your hand enters the robot area.

Always use the rack handles to insert or remove a rack.

5.2.4.3 Verification steps

- Pull a push the rack lightly in order to verify that the it is locked on the lane.
- Verify that this icon appears on the display bar in correspondence of the lane where the rack has been inserted.

5.2.5 How to load the input racks to the Input/Output Module

The following procedure describes how to load the input racks to the Module.

NOTICE

Load racks to the Input/Output Module in accordance with the lane configurations.

NOTICE

Samples loaded into priority input lanes (ASAP or STAT) are processed before samples loaded into Routine lanes. Each laboratory should determine its acceptable sample processing times for priority samples. If this time is not being met by loading priority samples in the priority input lanes of the IOM, centrifuge the sample tubes off-track and manually remove caps, if required. Then, load the sample tubes to the analyzers manually (for example, to the instrument carousel or the Interface Module).

5.2.5.1 Prerequisites

Authorized personnel:	Operator
Conditions:	• No rack inserted on the lane. • Lane configured as input lane.
Tools and materials:	None
Procedures:	Follow the procedure 5.2.1 *How to configure the lanes of the Input/Output Module*, page 357.

5.2.5.2 Task steps

1. Grasp the rack by the handle and position the rack so the handle is facing to you.

   In case of loading of a tray, position the tray so the tag identifying the tray is facing to you.

   ⚠ WARNING

   Potential Biohazard.

   Uncapped sample tubes are biohazardous.

   When handling uncapped sample tubes, avoid splashing sample outside the sample tubes.

⚠ WARNING

Potential Biohazard.

Sample tubes are potentially biohazardous.

Follow laboratory standard procedures and guidelines when handling tubes.

2. Place the rack flat on the worktable.
3. Align the edge of the rack with the guides on the worktable.
4. Slide the rack into the lane.

   In case of loading of a tray, insert the tray starting from the first lane assigned to the tray. Refer to the procedure 5.2.1 *How to configure the lanes of the Input/Output Module*, page 357. Example: Lanes 5 and 6 are reserved for the tray (Figure 62 – A). Therefore, the tray (Figure 62 – A) must be inserted starting from Lane 5 (Figure 62 – B).

   Figure 62:

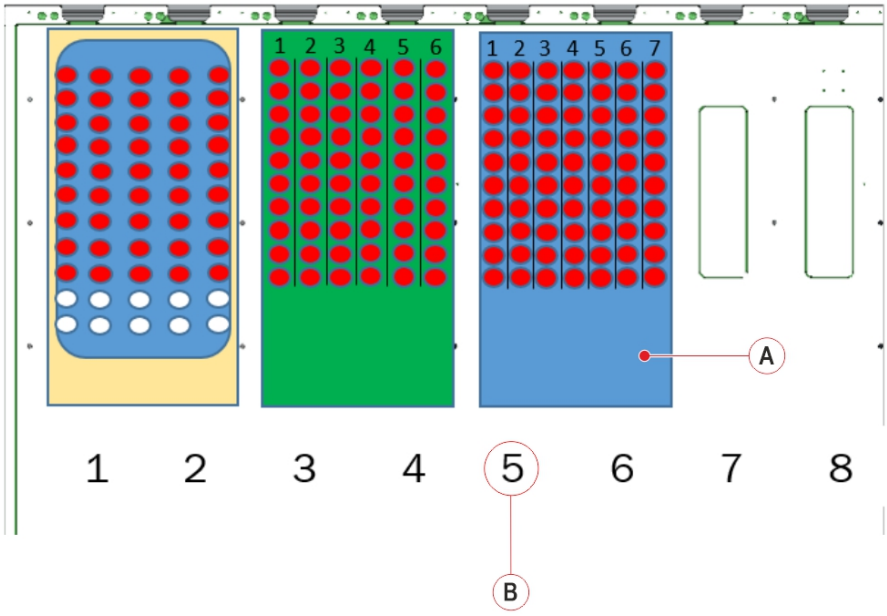

5. Push firmly until the rack clicks into position.

⚠ WARNING

Pinch Hazard.

Do not reach the area under the display bar. You could be injured if your hand enters the robot area.

Always use the rack handles to insert or remove a rack.

5.2.5.3 Verification steps

- Pull a push the rack lightly in order to verify that the it is locked on the lane.

- Verify that this icon appears on the display bar in correspondence of the lane where the rack has been inserted.

5.2.6 How to extract racks from the lanes of the Input/ Output Module

The following procedure describes how to extract the racks from the lanes.

5.2.6.1 Prerequisites

Authorized personnel:	Operator
Conditions:	None
Tools and materials:	None
Procedures:	None

5.2.6.2 Task steps

1. User is notified that the rack is ready to be extracted from the lane by the string `Rack to be extracted`.
2. Press this icon [41] on the display bar to extract the rack from the lane.

3. This icon [41] may appear to notify the User that the request of rack extraction is in progress.

4. Wait until this icon [41] appears.

NOTICE

The User has 30 seconds to extract the rack from the lane. If the rack is not extract within 30 seconds, it will be locked again.

5. Grasp the rack by the handle and pull it out from the lane.

⚠ WARNING

Pinch Hazard.

Operator injury due to an open access zone to robot movement.

Restore the rack to the lanes as soon as possible.

41. In case of error condition on the lane, this icon is displayed with a red background.

⚠ WARNING

Pinch Hazard.

Do not reach the area under the display bar. You could be injured if your hand enters the robot area.

Always use the rack handles to insert or remove a rack.

⚠ WARNING

Potential Biohazard.

Uncapped sample tubes are biohazardous.

When handling uncapped sample tubes, avoid splashing sample outside the sample tubes.

⚠ WARNING

Potential Biohazard.

Sample tubes are potentially biohazardous.

Follow laboratory standard procedures and guidelines when handling tubes.

⚠ WARNING

Potential Biohazard.

Biohazardous material could be present on the surfaces.

Take appropriate precautions and follow laboratory standard operating procedures and guidelines when performing this procedure.

6. Manage the sample tubes that you have extracted from the removed racks by following the good laboratory practice.

5.2.6.3 Verification steps

None.

5.2.7 How to open/close the safety cover of the Input/Output Module

Perform this procedure to open/close the safety cover of the Module.

5.2.7.1 Prerequisites

Authorized personnel:	Operator
Conditions:	Module Off-line
Tools and materials:	None
Procedures:	None

5.2.7.2 Task steps

1. Set the Module to Off-line:
   a. Click on `Overview` and select `Input/Output`
   b. Click on `Status` menu.
   c. Select `Off-line` function button and select the option `Flush Carriers`.
   d. Wait until the Module is set to Off-line.

   ⚠ WARNING

   Pinch Hazard.

   Ensure the robot has stopped all movement before proceeding to the next step.
2. If present, move the Panel PC aside to allow the cover opening.
3. Lift up the safety cover by the handle.

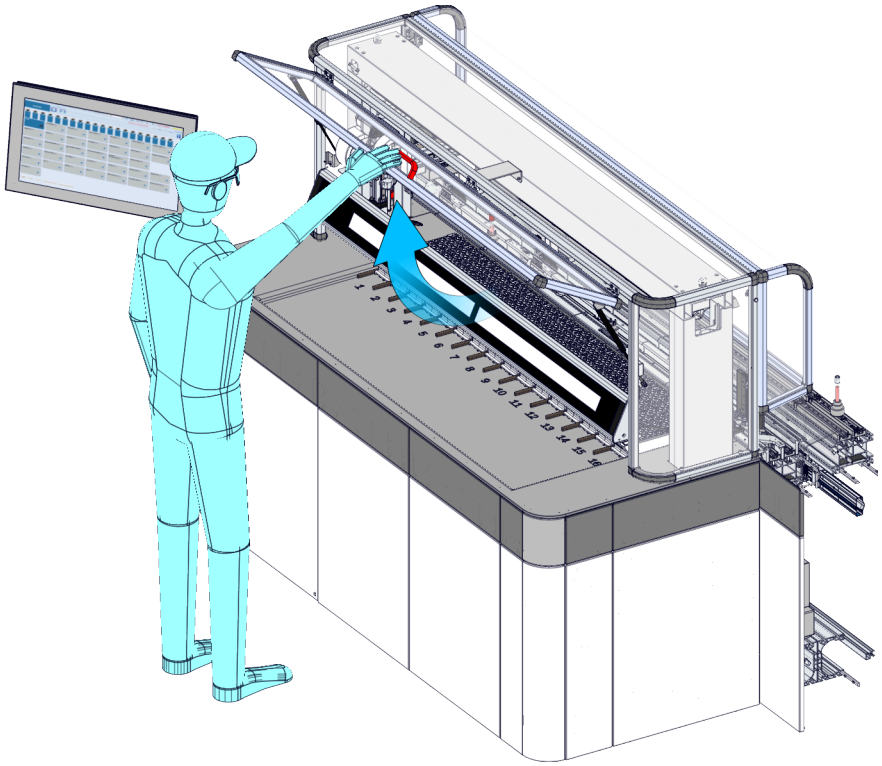

4. Lower the safety cover.
5. Set the Module to Off-line:
   a. Click on `Overview` and select `Input/Output`.
   b. Click on `Status` menu.
   c. Select `On-line` function button and confirm.

5.2.7.3 Verification steps

Verify that the Module is back online.

5.2.8 How to do the emergency cleaning of the Input/Output Module

Perform this procedure in the event of sample spilling out of the tube(s) or in case of tube(s) damage.

5.2.8.1 Prerequisites

Authorized personnel:	Operator
Conditions:	Module Off-line
Tools and materials:	• Lint-free cloth • 5% sodium hypochlorite solution
Procedures:	None

5.2.8.2 Task steps

⚠ WARNING

Potential Biohazard.

Biohazardous material could be present on the surfaces.

Take appropriate precautions and follow laboratory standard operating procedures and guidelines when performing this procedure

1. Set the Module to Off-line:
   a. Click on `Overview` and select `Input/Output`
   b. Click on `Status` menu.
   c. Select `Off-line` function button and select the option `Flush Carriers`.
   d. Wait until the Module is set to Off-line.

   ⚠ WARNING

   Pinch Hazard.

   Ensure the robot has stopped all movement before proceeding to the next step.

2. Extract all racks from the lanes. Refer to the procedure 5.2.6 *How to extract racks from the lanes of the Input/Output Module*, page 371. Ensure that all the lanes are completely free.

   ⚠ WARNING

   Potential Biohazard.

   Uncapped sample tubes are biohazardous.

   When handling uncapped sample tubes, avoid splashing sample outside the sample tubes.

⚠ WARNING

Potential Biohazard.

Sample tubes are potentially biohazardous.

Follow laboratory standard procedures and guidelines when handling tubes.

⚠ WARNING

Pinch Hazard.

Do not reach the area under the display bar. You could be injured if your hand enters the robot area.

Always use the rack handles to insert or remove a rack.

3. If present, move the Panel PC aside to allow the cover opening.
4. Lift up the safety cover by the handle.

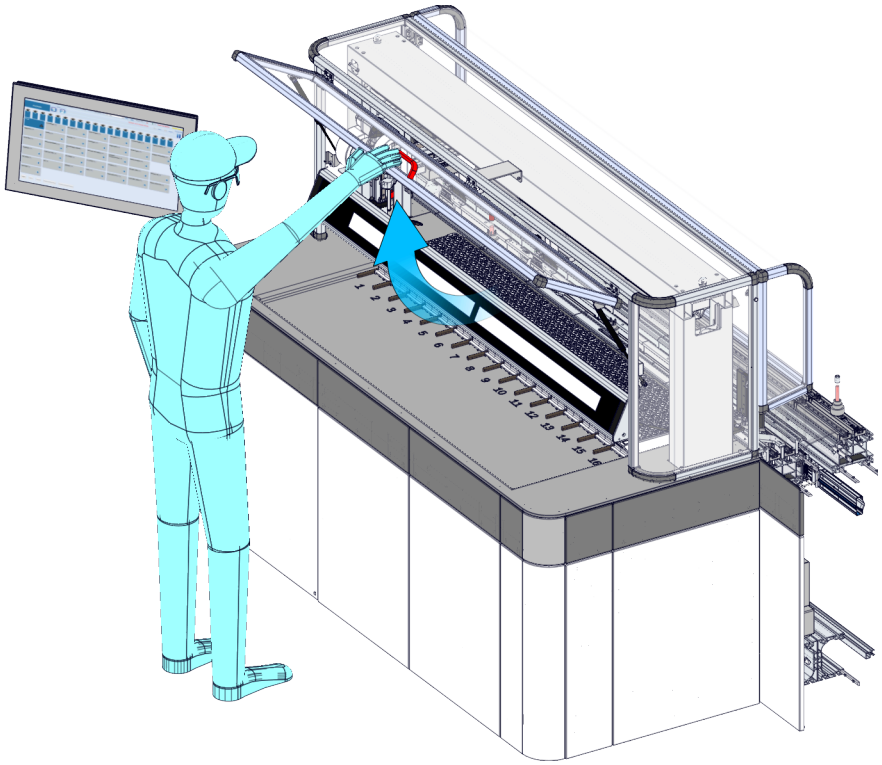

5. Grasp the robot and manually slide it on the side of the Module to allow easy access to the area.

⚠ CAUTION

Do not move the robot by any cables, wires, or the gripper.

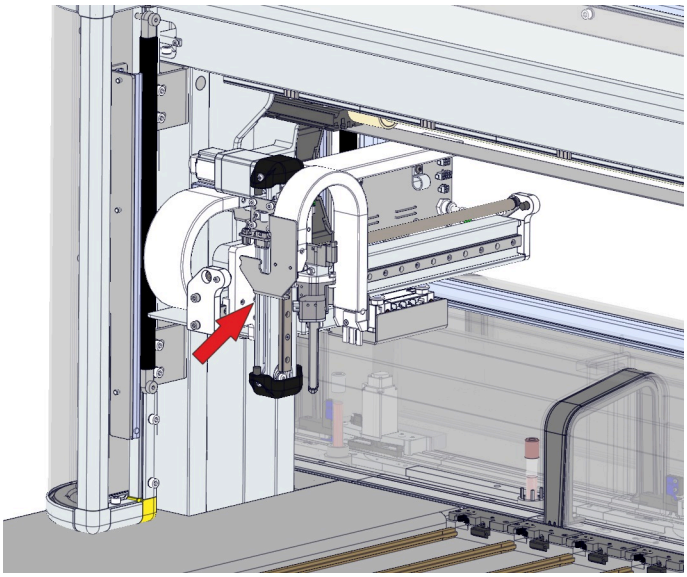

6. Remove the overturned tube(s) and the glass in case of broken sample tube(s).
7. Using a cloth moistened with 5% sodium hypochlorite, clean the contaminated area. Allow the solution to act for 10 minutes.
8. If racks need to be cleaned, use a lint-free cloth moistened with 5% sodium hypochlorite solution in order to remove the material. Allow the solution to act for 10 minutes.
9. Rinse with water and wait for the area to dry.
10. Write down the barcode ID of the tube(s) involved and notify this circumstance to the qualified personnel.
11. Lower the safety cover.
12. Reset the robot performing the following procedure:
    a. Click on `Overview` and select `Input/Output`
    b. Click on `Diagnostics - Robot` menu.
    c. Select `Init` function button.
    d. Wait until the robot initialization is completed, then select `On-line` function button and confirm.
13. Restore the racks to the lanes.
    - Reload to output lanes only empty racks. If the rack to be reload to output lanes contains tubes, manage the tubes accordingly to laboratory standard operating procedures .
    - Reload to input lanes the racks with no empty locations in rows.

Figure 63: Racks to be reloaded to input lanes

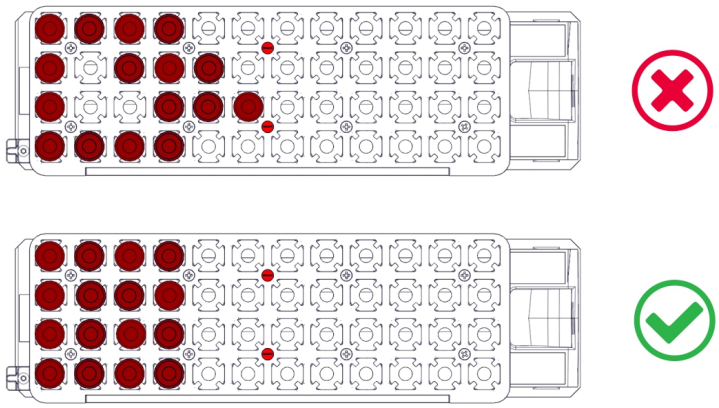

5.2.8.3 Verification steps

Verify that the Module is back online.

5.3 Rack Input Module

5.3.1 How to configure Rack Input Module

The following procedure describes how to configure the Rack Input Module for processing specific sample tubes.

5.3.1.1 Prerequisites

Authorized personnel:	Supervisor
Conditions:	None
Tools and materials:	None
Procedures:	None

5.3.1.2 Task steps

1. Click on `Automation`.
2. Click on `Configuration`.
3. Click on `Settings`.
4. Select the parameter `RIM X Sample Tube Configuration` (where X is the instance of the RIM).
5. Select the type of configuration for the Module, see Table 166 *Module configuration*, page 457.

5.3.1.3 Verification steps

The display (see Figure 97 *Rack Input Module*, page 451) shows the Module configuration. Refer to Table 166 *Module configuration*, page 457.

5.3.2 How to load racks to Rack Input Module

The following procedure describes how to load racks to Rack Input Module.

5.3.2.1 Prerequisites

Authorized personnel:	Operator
Conditions:	None
Tools and materials:	None
Procedures:	5.3.1 *How to configure Rack Input Module*, page 379

5.3.2.2 Task steps

1. Grasp the rack by the handle and position the rack so the handle is facing to you.
2. Place the rack on the loading area at the left of the Robot and ensure the rack is perpendicular to the moving rack slider direction.

⚠ WARNING

Potential Biohazard.

Sample tubes are potentially biohazardous. Follow your laboratory standard operating procedures and guidelines when handling and disposing of tubes.

⚠ CAUTION

Mechanical Hazard.

Operator injury due to mechanical parts on movement on Loading/Unloading area.

Do not reach the area under the robot cover. You could be injured if your hand enters the Rack Input Module Robot area.

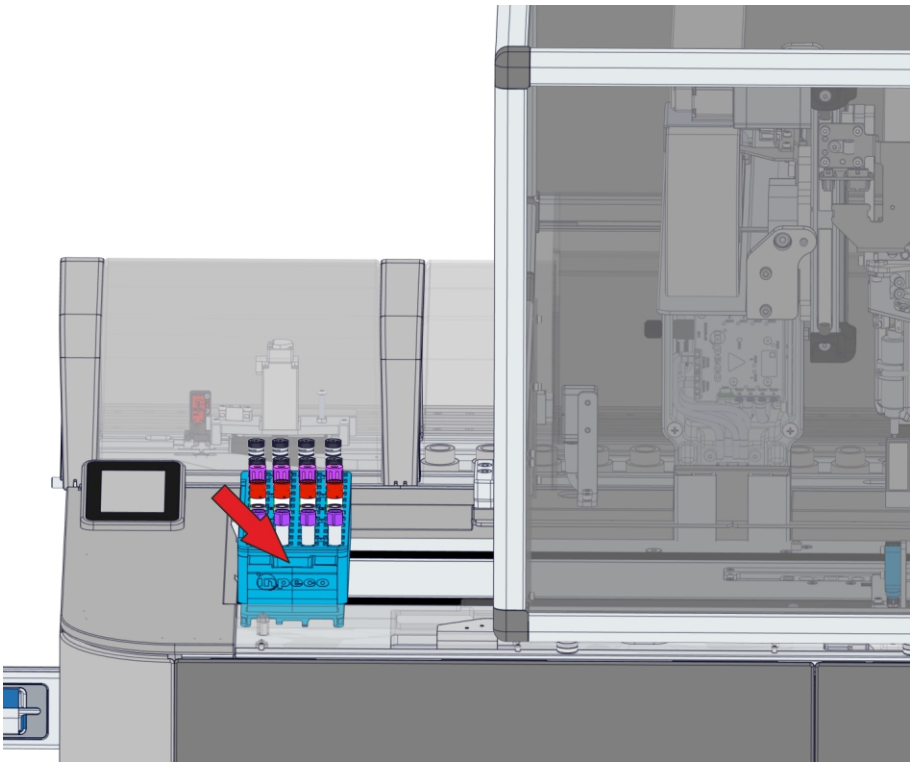

5.3.2.3 Verification steps

None.

5.3.3 How to unload racks from Rack Input Module

The following procedure describes how to unload racks from Rack Input Module.

5.3.3.1 Prerequisites

Authorized personnel:	Operator
Conditions:	None
Tools and materials:	None
Procedures:	None

5.3.3.2 Task steps

1. Wait until the empty rack has reached the end of the unloading area.
2. Grasp the rack by the handle and remove it from the area.

⚠ WARNING

Potential Biohazard.

Sample tubes are potentially biohazardous. Follow your laboratory standard operating procedures and guidelines when handling and disposing of tubes.

⚠ CAUTION

Mechanical Hazard.

Operator injury due to mechanical parts on movement on Loading/Unloading area.

Do not reach the area under the robot cover. You could be injured if your hand enters the Rack Input Module Robot area.

⚠ WARNING

Pinch Hazard

Remove the racks from the Rack Input Module unloading area only when the rack processing has been completed. Always use the rack handle to insert or remove a rack. Sample tubes should be loaded into racks only in a different working area.