6.2 Rack Input Module

6.2.1 Description

The Rack Input Module provides a point of sample tube input and tube type identification. The Rack Input Module provides a walk away capacity up to 6 48-tube-position racks.

Figure 97: Rack Input Module

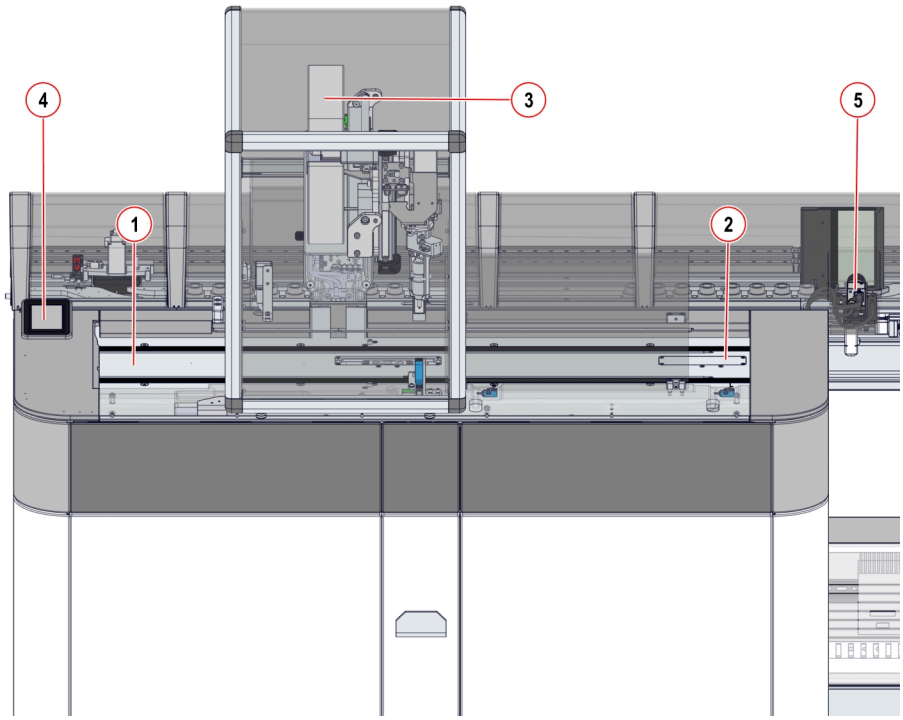

1. Loading area
2. Unloading area
3. Robot
4. Display
5. Vision System

The Module is equipped with the Vision System (VS) that allows to identify sample tube ID and recognize tube type features (cap color, cap presence and tube type).

Figure 98: Vision System

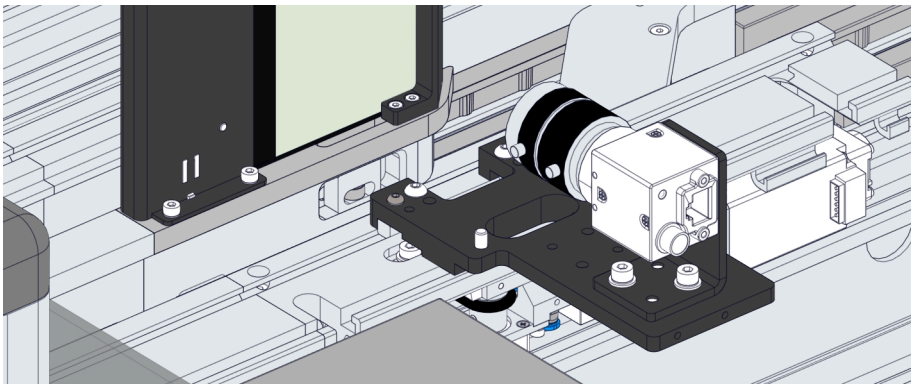

The Module is equipped with a lighting system to illuminate the area under the Module covers. The lighting system signals the Module status and warns the User if it is necessary to intervene. In particular:

Table 163: Lighting system – User intervention

Light	Meaning
Red	User intervention is required
Blue	User intervention is not required

Table 164: Lighting system – Module status

Light	Module status
On	• `On-line` • `Going to Off-line` [47]
Off	• `Off-line` • `Transitioning to Off-line` • `Initializing` • `Unknown`

NOTICE

The lighting system may malfunction. The UI is the main reference to understand the Module status and if the User intervention is necessary.

47. Only for Modules that support this status.

Figure 99: 48-tube-position rack

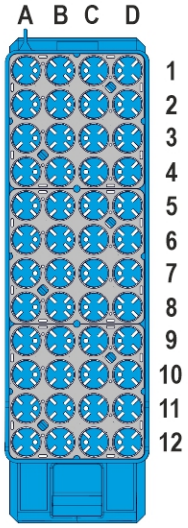

Observe the following instructions to ensure proper processing of the samples when using the Module:

Table 165: Allowable Sample Tube Types

Diameter (min-max) [mm] [48]	Length (min-max) [mm] [48]	Capped	Centrifuged	Source	Notes
11-16	65-100	No restrictions, depends on settings	No restrictions, depends on settings	Manual Load	Sealed sample tubes are not allowed

NOTICE

Sample damaged.

In case of electrical power loss, sample tube could be stuck in the robot gripper. Contact FSE to remove it before powering on the Automation System.

⚠ CAUTION

Sample tube wrongly processed. Tube lost. Tube crash.

Sample ID mismatch due to sample tubes movement by the Operator. Access to the sample processing area only when requested.

48. Nominal dimension (uncapped)

⚠ WARNING

Incorrect aspirated volume due to foam/bubbles/liquid meniscus in the sample.

In case of foam/bubbles/liquid meniscus inside the sample tube, an incorrect volume of sample can be aspirated and dispensed because of the presence of air instead of liquid, without user notification.

Therefore, it is strongly recommended, in case of aliquoted samples submitted to procedures that cause mixing, to perform a final centrifugation before letting them routed to the Aliquoter module or to any other automatic sample procedure.

6.2.2 Composition

Figure below shows the path of the carriers along the Buffer lane.

Figure 100:

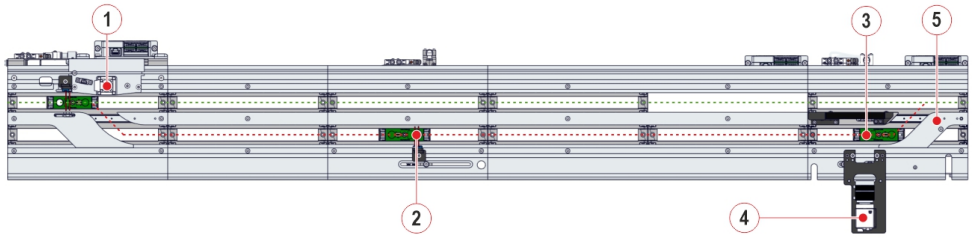

1. NSD device
2. Load Gate
3. Identification Gate
4. Vision System
5. ATR device

6.2.3 Module functioning

The input process is split in the following phases:

1. The User manually loads a rack containing sample tubes corresponding of the same type previously configured at the Loading area (see Figure 97 *Rack Input Module*, page 451).
2. After the rack is placed, the rack slider of the Rack Input Module moves the rack under the robot, so that the sample tubes are ready to be loaded on the empty carriers present at the Load Gate of the Rack Input Module, starting from the first sample tube on the right column of the rack.
3. The carrier with the sample tube is released from the Load gate and proceeds to the Vision System, for sample tube type identification. The sample tube on carrier is then released to proceeds on the Automation Track main lane for processing.
4. When the robot finishes loading all the sample tubes of the first column, the rack slider move the rack in order to place the second column under the robot.
5. This process continues until all the four columns of the rack are empty and the empty rack is then moved by the rack slider towards the Unloading area (see Figure 97 *Rack Input Module*, page 451), where it can be retrieved by the User.

6.2.4 Module configuration

The display (see Figure 97 *Rack Input Module*, page 451) provides the User with the information about the Module configuration based on the sample tubes that can be processed.

The icons identifies the type of Module configuration.

Table 166: Module configuration

Icon	Module configuration	Description
	`Routine Input`	Load racks with sample tubes not centrifuged for routine processing. Sample tubes will be automatically detected as capped or uncapped by the Vision System. Sample tube is considered as centrifuged if no Centrifuge Module is installed.
	`Uncapped Input`	Load racks with uncapped sample tube.
	`Skip Centrifuge Input`	Load pre-spun and capped sample tubes

6.2.5 Status, diagnostics and settings

To access the information about status, diagnostics and setting related to the Module, select:

1. `Overview`
2. `Rack Input`

NOTE
Common Function buttons are also available in the following screens.

6.2.5.1 Status

Select `Status` from the Module options menu.

Table 167: Status list box

Item	Description
`Node ID`	Board address where the Module firmware resides.
`Room for Empty Carriers`	Number of empty carriers that can currently enter the Module buffer.
`Room for Routine Samples`	Number of routine samples that can currently enter the Module buffer.
`Room for STAT Samples`	Number of STAT samples that can currently enter the Module buffer.

6.2.5.2 Settings

Select `Settings` from the Module options menu.

Table 168: Settings list box

Item	Description
`01 Y Axis - Track Position (1/10 mm)`	Displays Y Axis position at the Load gate.
`02 Z Axis - Track Position (1/10 mm)`	Displays Z Axis position at the Load gate.
`03 Y Axis - Rack Position (1/10 mm)`	Displays Y Axis position at the first rack location.
`04 Z Axis - Rack Position (1/10 mm)`	Displays Z Axis position at the first rack location.
`05 Rack Slider distance from Waiting Area to Working Area (1/10 mm)`	Displays rack slider distance from Waiting Area to Working Area.
`06 Waiting Area Compacting Position (1/10 mm)`	Displays Waiting Area Compacting position.
`07 Rack Slider End Position (1/10 mm)`	Displays Rack Slider End position.
`Error Code`	Error code related to the Module.

Table 169: Settings function buttons

Function button	Access level	Description
`Tube Gripper`	Supervisor	Allows gripper open/close movement and Initializes the gripper after an error recovery.
`Arm`	Supervisor / FSE	Moves the robot arm.
`Pick&Place`	Supervisor	Allows Robot reaching the tube in the selected location and pick it with gripper and allows robot placing the tube currently in gripper in the selected location.
`Rack Slider`	Supervisor	Allows to: • Move the rack slider • Move pins up / down • Init and Home of the Rack Slider
`Lock/Unlock rack`	Supervisor	Allows to lock/unlock rack on the working area.
`Stopper`	Supervisor	Allows stopper up / down movement

Table 169 Settings function buttons (cont'd.)

Function button	Access level	Description
`Teach`	FSE	Allows to teach the Track position and the Rack position.
`Autoteach`	FSE	Performs the automatic teach of the robot.

6.2.5.3 Gates

Select `Gates` from the Module options menu.

Table 170: Gates list box

Item	Description
`Load Gate`	Displays the RF-ID of the carrier currently located at the gate, if present and the sample ID, if any.
`Identification Gate`	Displays the RF-ID of the carrier currently located at the gate, if present and the sample ID, if any.

Table 171: Gates function buttons

Function button	Access level	Description
`Pass`	Supervisor	Activates the selected gate to allow a sample carrier to be released.
`Divert`	Supervisor	Performs diagnostics commands on the NSD devices.
`ACR`	Supervisor	Locks/unlocks the ACR device.
`Active Return`	Supervisor	Turns on the ATR motor.

6.2.5.4 Diagnostics

Select `Diagnostics` from the Module options menu.

Table 172: Diagnostics list box

Item	Description
`Actual Y-Axis Position (1/10 mm)`	Current position of the robot Y axis.
`Actual Z-Axis Position (1/10 mm)`	Current position of the robot Z axis.
`Error Code`	Error code related to the Module.

Table 173: Diagnostics function buttons

Function button	Access level	Description
`Tube Gripper`	Supervisor	Allows gripper open/ close movement and Initializes the gripper after an error recovery.
`Arm`	Supervisor / FSE	Moves the robot arm.
`Pick&Place`	Supervisor	Allows Robot reaching the tube in the selected location and pick it with gripper and allows robot placing the tube currently in gripper in the selected location.
`Rack Slider`	Supervisor	Allows to: • Move the rack slider • Move pins up / down • Init and Home of the Rack Slider
`Lock/Unlock rack`	Supervisor	Allows to lock/unlock rack on the working area.
`Stopper`	Supervisor	Allows stopper up / down movement
`Vision`	Supervisor	Restart the software of the Vision System
`Test`	FSE	Starts a module stress test.

6.2.5.5 Diagnostics – Light Signals Device

Select `Diagnostics — Light Signals Device` from the Module options menu.

Refer to Table 172 *Diagnostics list box*, page 462 for further information.

Table 174: Diagnostics function buttons

Function button	Access level	Description
`Lamp Off`	Supervisor	Turns off the lighting system.
`Lamp On`	Supervisor	Turn on the red or blue light of the lighting system.

6.3 Bulk Input Module

6.3.1 Description

The Bulk Input Module provides a point of sample tube input and tube type identification. The Bulk Input Module allows direct loading on the track of capped sample tubes without using racks. The Bulk Input Module provides a walkaway capacity up to 700 capped sample tubes.

Figure 101: Bulk Input Module

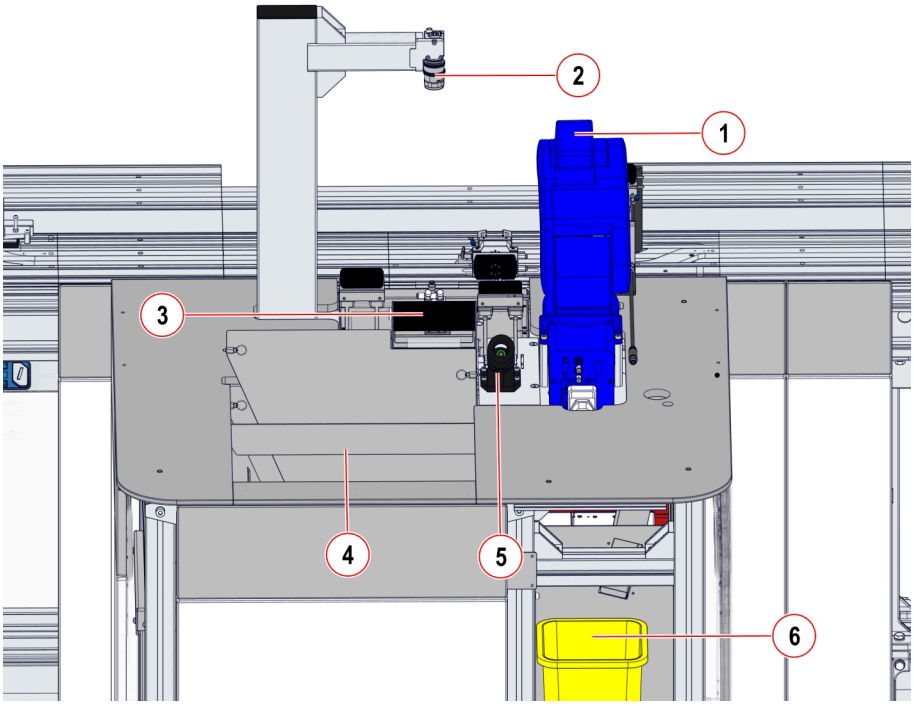

1. Robot
2. Vision System
3. Pick Area
4. Hopper
5. Stat Area
6. Waste

The Module is equipped with the Vision System (VS) that allows to identify sample tube ID and recognize tube type features (cap color, cap presence and tube type).

Figure 102: Vision System

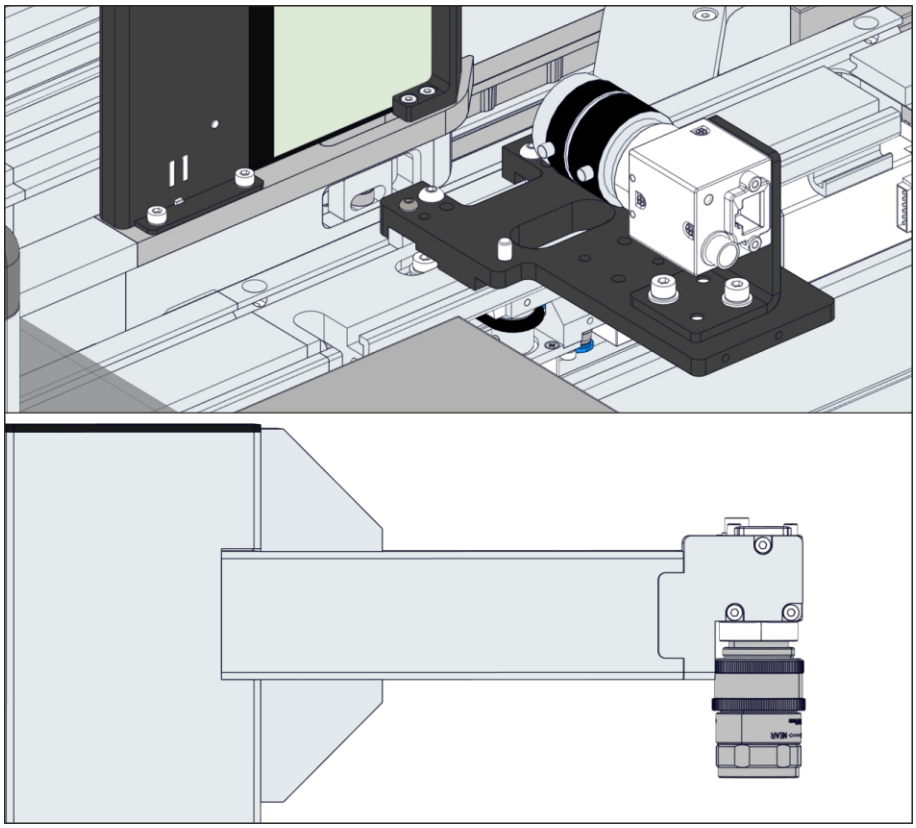

The Module is equipped with a lighting system to illuminate the area under the Module covers. The lighting system signals the Module status and warns the User if it is necessary to intervene. In particular:

Table 175: Lighting system – User intervention

Light	Meaning
Red	User intervention is required
Blue	User intervention is not required

Table 176: Lighting system – Module status

Light	Module status
On	• `On-line` • `Going to Off-line` [49]
Off	• `Off-line` • `Transitioning to Off-line` • `Initializing` • `Unknown`

NOTICE

The lighting system may malfunction. The UI is the main reference to understand the Module status and if the User intervention is necessary.

Observe the following instructions to ensure proper processing of the samples when using the Module:

Table 177: Allowable Sample Tube Types

Diameter (min-max) [mm] [50]	Length (min-max) [mm] [50]	Capped	Centrifuged	Source	Notes
11-16	65-100	Yes	No restrictions	Manual Load	None

⚠ CAUTION

Sample tube wrongly processed. Tube lost. Tube crash.

Sample ID mismatch due to sample tubes movement by the Operator.

Remove the safety shield from the Module when requested only.

⚠ CAUTION

Lacerations, Punctures.

Entanglement due to User access to mechanical moving parts.

Use caution when accessing parts of the module normally protected by safety shields.

49. Only for Modules that support this status.
50. Nominal dimension (uncapped)

⚠ WARNING

Incorrect aspirated volume due to foam/bubbles/liquid meniscus in the sample.

In case of foam/bubbles/liquid meniscus inside the sample tube, an incorrect volume of sample can be aspirated and dispensed because of the presence of air instead of liquid, without user notification.

Therefore, it is strongly recommended, in case of aliquoted samples submitted to procedures that cause mixing, to perform a final centrifugation before letting them routed to the Aliquoter module or to any other automatic sample procedure.

6.3.2 Composition

Figure below shows the path of the carriers along the Buffer lane.

Figure 103:

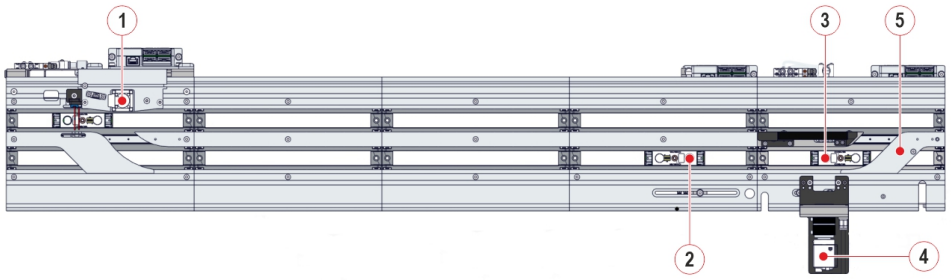

1. NSD device
2. Load Gate
3. Identification Gate
4. Vision System
5. ATR device

6.3.3 Module functioning

The input process is split in the following phases:

1. The user load the sample tubes into the Bulk Input Module.
2. When all the sample tubes are loaded in the Bulk Input Module, the module starts loading the sample tubes.
3. The Hopper moves the sample tubes up the back panel, where the sample tubes are identified by the Vision System. Here the robot pick the sample tube located on the back panel (if a sample tube are loaded in the quick loading area, it has priority).
4. The robot place the sample tube on the empty carrier present at the Load Gate.
5. After the Bulk Input Module Robot places a sample tube into an empty carrier, the carrier with the sample tube is released from the Load Gate and and is identified by the Vision System, for sample tube ID and tube type identification.
6. The sample tube on carrier is then released to proceed on the Automation Track main lane for processing.

6.3.4 Status, diagnostics and settings

To access the information about status, diagnostics and setting related to the Module, select:

1. `Overview`
2. `Bulk Input`

NOTE
Common Function buttons are also available in the following screens.

6.3.4.1 Status

Select `Status` from the Module options menu.

Table 178: Status list box

Item	Description
`Node ID`	Board address where the Module firmware resides.
`Room for Empty Carriers`	Number of empty carriers that can currently enter the Module buffer.
`Room for Routine Samples`	Number of routine samples that can currently enter the Module buffer.
`Room for STAT Samples`	Number of STAT samples that can currently enter the Module buffer.

6.3.4.2 Settings

Select `Settings` from the Module options menu.

Table 179: Settings list box

Item	Description
`01 Waste Bucket - Tubes capacity`	Displays the capacity of the waste bucket.
`02 Lifter in Down Position (1/10mm)`	Displays the Lifter in Down position.
`03 Lifter in Up-1 Position (1/10mm)`	Displays the Lifter in Up-1 position.
`04 Lifter in Up-2 Position (1/10mm)`	Displays the Lifter in Up-2 position.
`05 Manipulator - Place Z offset (1/10mm)`	Displays the Z axis offset position.
`06 Discard unreadable tubes into the waste bucket`	Displays if the module discard the unreadable tubes into the waste bucket.

Table 180: Settings function buttons

Function button	Access level	Description
`Routine`	Supervisor	Allows to start/stop the robot routine.
`Init`	Supervisor	Allows to initialize the robot .
`Move`	Supervisor	Allows to move robot in the selected positions and the hardware components.
`Calibration`	FSE	Allows to execute the robot calibration and store position.
`Teach`	FSE	Allows to teach the tube sensor in buffer.
`Setup`	FSE	Allows to set the maximum number of tubes in the waste.
`Unreadable Tubes`	FSE	Allows to release or discard the unreadable tubes.

6.3.4.3 Gates

Select `Gates` from the Module options menu.

Table 181: Gates list box

Item	Description
`Load Gate`	Displays the RF-ID of the carrier currently located at the gate, if present and the sample ID, if any.
`Identification Gate`	Displays the RF-ID of the carrier currently located at the gate, if present and the sample ID, if any.

Table 182: Gates function buttons

Function button	Access level	Description
`Pass`	Supervisor	Activates the selected gate to allow a sample carrier to be released.
`Divert`	Supervisor	Performs diagnostics commands on the NSD devices.
`Carrier`	Supervisor	Locks/unlocks the carrier.
`Active Return`	Supervisor	Turns on the ATR motor.
`Rotate`	Supervisor	Allows to rotate the carrier.

6.3.4.4 Diagnostics – Manipulator

Select `Diagnostics – Manipulator` from the Module options menu.

Table 183: Diagnostics – Manipulator list box

Item	Description
`01 ATR Motor Error`	Error code related to the ATR motor.
`02 Auxiliary Loading Error`	Error code related to the auxiliary loading.
`03 Hopper Empty Error`	Error code related to the hopper empty.
`04 Modbus Communication Error`	Error code related to the Modbus communication.
`05 Tube Stuck in Lifter Error`	Error code related to the tube stuck in lifter.
`06 Waste Bucket Filling Error`	Error code related to the waste bucket filling.
`07 Waste Bucket Presence Error`	Error code related to the waste bucket presence.
`08 AutoRestart Error`	Error code related to the auto-restart.

Table 184: Diagnostics – Manipulator function buttons

Function button	Access level	Description
`Routine`	Supervisor	Allows to start/stop the robot routine.
`Init`	Supervisor	Allows to initialize the robot.
`Pick and Load Tube from Quick Load`	Supervisor	Allows to load the tube in the quick load area.
`Discard Tube`	Supervisor	Allows to discard tube.
`Pick&Place`	FSE/Supervisor	Allows to: • Pick tube on the quick loading area. • Pick tube from the Identification Gate. • Place tube to the selected position.
`Gripper`	Supervisor	Allows to open/close the robot gripper.
`Move`	Supervisor	Allows to move robot in the selected positions.

6.3.4.5 Diagnostics – Picking Area, Lifter, Hopper Shaker and Buffer

Select `Diagnostics – Picking Area, Lifter, Hopper Shaker and Buffer` from the Module options menu.

Table 185: Diagnostics – Picking Area, Lifter, Hopper Shaker and Buffer function buttons

Function button	Access level	Description
`Picking Area`	Supervisor	Allows to scan and load the tube in a carrier or scan and pick the tube.
`Back Panel`	Supervisor	Allows to on/off the back panel.
`Lifter`	FSE/Supervisor	Allows to: • Enable/disable motor and execute homing. • Move the lifter.
`Barrier`	Supervisor	Allows to open/close the barrier
`Hopper Shaker`	Supervisor	Allows to up/down the hopper shaker.

6.3.4.6 Diagnostics – Vision System

Select `Diagnostics – Vision System` from the Module options menu.

Table 186: Diagnostics – Picking Area, Lifter, Hopper Shaker and Buffer function buttons

Function button	Access level	Description
`Vision System`	Supervisor	Allows to restart the processing software.
`Identify tube`	Supervisor	Activates Vision System to allow sample tube identification

6.3.4.7 Diagnostics – Hardware Stress Test

Select `Diagnostics – Hardware Stress Test` from the Module options menu.

Table 187: Diagnostics – Picking Area, Lifter, Hopper Shaker and Buffer function buttons

Function button	Access level	Description
`Start`	FSE	Allows to start hardware stress test.
`Stop`	FSE	Allows to stop hardware stress test.

6.3.4.8 Diagnostics – Light Signals Device

Select `Diagnostics — Light Signals Device` from the Module options menu.

Refer to Table 183 *Diagnostics – Manipulator list box*, page 473 for further information.

Table 188: Diagnostics – Light Signals Device function buttons

Function button	Access level	Description
`Lamp Off`	Supervisor	Turns off the lighting system.
`Lamp On`	Supervisor	Turn on the red or blue light of the lighting system.

6.4 Centrifuge Module

6.4.1 Description

The Centrifuge Module automates centrifugation processing for sample separation. The Centrifuge Module includes input and output areas and the refrigerated centrifuge unit.

Figure 104: Centrifuge Module

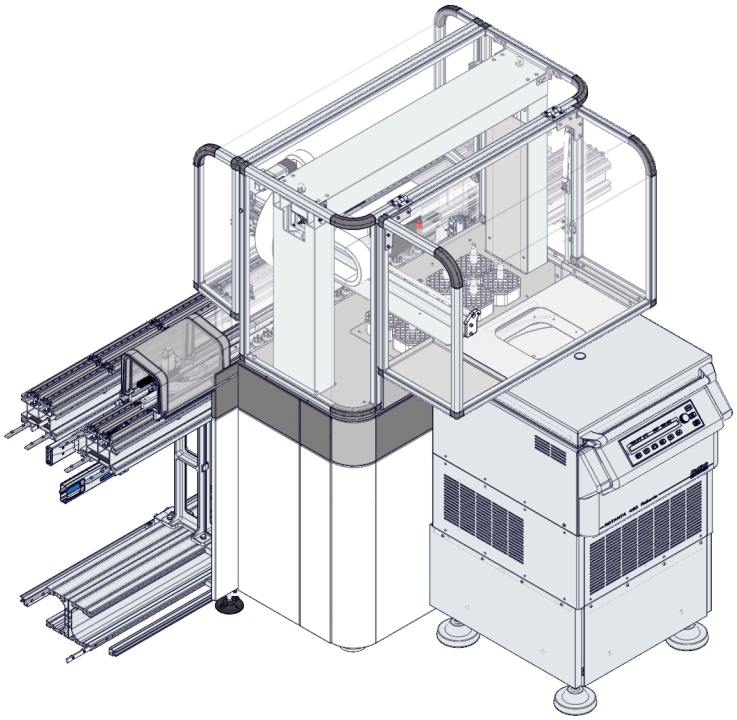

Observe the following instructions to ensure proper processing of the samples when using the Module:

Table 189: Allowable Sample Tube Types

Diameter (min-max) [mm] [51]	Length (min-max) [mm] [51]	Capped	Centrifuged	Source	Notes
11-16	65-100	Yes	No restrictions	Automation System	None

⚠ CAUTION

Sample tube wrongly processed. Tube lost. Tube crash.

Sample ID mismatch due to sample tubes movement by the Operator. Remove the safety shield from the Module when requested only.

51. Nominal dimension (uncapped)

⚠ WARNING

When the Centrifuge is running, no persons, dangerous substances or objects may be within the safety margin of 300 mm [11.811 in] around the Centrifuge.

6.4.2 Composition

Figure below shows the path of the carriers along the Buffer lane.

Figure 105:

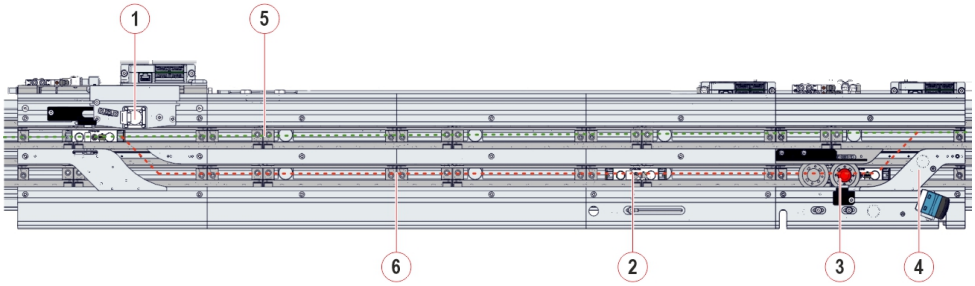

1. NSD device
2. Unload Gate
3. Load Gate
4. ATR device
5. Main Lane
6. Secondary Lane

6.4.3 Module functioning

The process is split in the following phases:

1. The sample tube routed into the Automation Track secondary lane is stopped, picked by the Centrifuge Robot and placed into one of the 4 bucket inserts with 20 tube positions, located in the input area.
2. The Centrifuge Module controls the sample tube weight balancing into and within the bucket inserts; the Robot may move sample tubes among bucket inserts to reach the correct balance.
3. When balancing process is completed, the Centrifuge door is automatically opened and bucket inserts are loaded into the Centrifuge.
4. When the spin cycle is completed, the Robot performs the reverse process unloading bucket inserts form the Centrifuge and placing them into the output area.
5. The Robot picks sample tubes and places them into empty sample carriers available in the Centrifuge Module secondary lane.
6. The Barcode Reader reads the sample tube ID and associates it to the tube carrier ID in which the tube has been placed.
7. The sample tube on carrier is then released to proceed on the Automation Track main lane for processing.

6.4.4 Status, diagnostics and settings

To access the information about status, diagnostics and setting related to the Module, select:

1. `Overview`
2. `Centrifuge`

NOTE

Common Function buttons are also available in the following screens.

NOTICE

Refer to the Hettich documentation for the configuration parameters of the Centrifuge.

6.4.4.1 Status

Select `Status` from the Module options menu.

Table 190: Status list box

Item	Description
`Node ID`	Board address where the Module firmware resides.
`Room for Empty Carriers`	Number of empty carriers that can currently enter the Module buffer.
`Room for Routine Samples`	Number of routine samples that can currently enter the Module buffer.
`Room for STAT Samples`	Number of STAT samples that can currently enter the Module buffer.

Table 191: Status function buttons

Function button	Access level	Description
`Clear Tubes`	Operator	Press this button when all sample tubes have been physically re-moved from all bucket inserts of the Centrifuge Module.
`Remove Tube`	Operator	Press this button when a sample tube has been physically removed from the Module.

6.4.4.2 Settings

Select `Settings` from Module options menu.

Table 192: Settings list box

Item	Description
`01 Run Time (seconds)`	Configured duration of centrifugation spin cycle.
`02 Runtime Tolerance (1-60 seconds)`	Configured run time tolerance of the centrifugation.
`03 Speed (1000-4500 RPM)`	Configured speed of the centrifugation spin cycle.
`04 Temperature (-20-40°C)`	Configured temperature that is maintained during centrifugation process.
`05 Temperature Tolerance (1-10°C)`	Configured temperature tolerance that is maintained during centrifugation process.
`06 Acceleration Level (1-9)`	Actual acceleration level.
`07 Deceleration Level (0-9)`	Actual deceleration level.
`08 Temperature warning query frequency (seconds)`	Number of seconds which the module can exceed the maximum temperature.
`09 Max temperature warning occurrences (1-5)`	Number of times excessive temperature is accepted.
`10 Batch Size (4-80)`	Actual maximum number of tubes that can be centrifuged.
`11 Timeout From Last Unloaded Tube (seconds)`	Number of minutes since the last routine sample tube scheduled for centrifugation has been unloaded on the bucket inserts by the robot. When this time elapsed, even if the Centrifuge batch size is not met, the bucket inserts are loaded into the Centrifuge and centrifugation begins.
`12 Timeout From First Unloaded Tube (seconds)`	Number of minutes since the first routine sample tube scheduled for centrifugation has been unloaded on the bucket inserts by the robot. When this time elapsed, even if the Centrifuge batch size is not met, the bucket inserts are loaded into the Centrifuge and centrifugation begins.
`13 Timeout From Last Unloaded STAT Tube (seconds)`	Number of minutes since the last STAT sample tube scheduled for centrifugation has been unloaded on the bucket inserts by the robot. When this time elapsed, even if the Centrifuge batch size is not met, the bucket inserts are loaded into the Centrifuge and centrifugation begins.

Table 192 Settings list box (cont'd.)

Item	Description
`14 Timeout From First Unloaded STAT Tube (seconds)`	Number of minutes since the first STAT sample tube scheduled for centrifugation has been unloaded on the bucket inserts by the robot. When this time elapsed, even if the Centrifuge batch size is not met, the bucket inserts are loaded into the Centrifuge and centrifugation begins.
`15 Minimum Tube Weight (mg)`	Minimum tube weight (in milligrams) to be centrifuged.
`16 Maximum Tube Weight (mg)`	Maximum tube weight (in milligrams) to be centrifuged.
`17 Rotor Cycles Replacement Warning (%)`	Shows the percentage of rotor cycle.
`18 Maximum Rotor Centrifugation Cycles`	Maximum number cycles of centrifugation cycles.
`19 Buckets Cycles Replacement Warning (%)`	Shows the percentage of buckets cycle
`20 Maximum Buckets Centrifugation Cycles`	Maximum number cycles of bucket centrifugation cycles.
`21 Tube Weight Relocation Threshold (%)`	Threshold, as percentage [0, 100], of the difference between the predicted/estimated and the real tube weight. Increasing this value results in less tube movements.
`22 Max Imbalance Tube Weight Threshold (mg)`	Max allowed unbalanced weight in mg after which tubes start.
`23 Overall Buckets Service Life (0-60 months)`	Counter of Buckets Service Life.
`24 Overall Buckets Service Life Replacement Warning (%)`	Shows the percentage of buckets wear.
`25 Load Gate Position, X Axis (1/10 mm)`	Robot X coordinate at the Load Gate position (Barcode Reader position).
`26 Load Gate Position, Y Axis (1/10 mm)`	Robot Y coordinate at the Load Gate position (Barcode Reader position).
`27 Load Gate Position, Z Axis (1/10 mm)`	Robot Z coordinate at the Load Gate position (Barcode Reader position).
`28 Unload Gate Position, X Axis (1/10 mm)`	Robot X coordinate at the Unload Gate position.
`29 Unload Gate Position, Y Axis (1/10 mm)`	Robot Y coordinate at the Unload Gate position.
`30 Unload Gate Position, Z Axis (1/10 mm)`	Robot Z coordinate at the Unload Gate position.
`31 Input Area Slot 1 Position, X Axis (1/10 mm)`	Robot X coordinate at the Input Area Slot 1 position.

Table 192 Settings list box (cont'd.)

Item	Description
`32 Input Area Slot 1 Position, Y Axis (1/10 mm)`	Robot Y coordinate at the Input Area Slot 1 position.
`33 Input Area Slot 1 Position, Z Axis (1/10 mm)`	Robot Z coordinate at the Input Area Slot 1 position.
`34 Output Area Slot 0 Position, X Axis (1/10 mm)`	Robot X coordinate at the Output Area Slot 0 position.
`35 Output Area Slot 0 Position, Y Axis (1/10 mm)`	Robot Y coordinate at the Output Area Slot 0 position.
`36 Output Area Slot 0 Position, Z Axis (1/10 mm)`	Robot Z coordinate at the Output Area Slot 0 position.
`37 Centrifuge Bucket Position, X Axis (1/10 mm)`	Robot X coordinate at the Centrifuge Bucket position.
`38 Centrifuge Bucket Position, Y Axis (1/10 mm)`	Robot Y coordinate at the Centrifuge Bucket position.
`39 Centrifuge Bucket Position, Z Axis (1/10 mm)`	Robot Z coordinate at the Centrifuge Bucket position.
`Error Code`	Error code related to the Module, if any.

Table 193: Settings function buttons

Function button	Access level	Description
`Home`	Supervisor	Moves the Robot to Home Position.
`Move`	Supervisor	Moves the Robot to the selected position.
`Approach`	Supervisor	Moves the Robot above the selected position.
`Arm`	FSE	Moves the robot arm.
`Hettich Setup`	Supervisor	Allows configuration of centrifugation parameters.
`Tube Gripper`	Supervisor	Allows to open/close the robot gripper.
`Teach`	FSE	Allows to teach the Robot positions.
`Tube/Bucket Setup`	Supervisor	Allows the configuration of the tube/bucket parameters.

6.4.4.3 Settings - Barcode Reader

Select `Settings – Barcode Reader` from Module options menu.

Refer to Table 192 *Settings list box*, page 483 for further information.

Table 194: Settings - Barcode Reader function buttons

Function button	Access level	Description
`BCR Config`	FSE	Allows to configure the Imager device.

6.4.4.4 Gates

Select `Gates` from the Module options menu.

Table 195: Gates list box

Item	Description
`01 Unload Gate`	Displays the RF-ID of the carrier currently located at the gate, if present and the sample ID, if any.
`02 Load Gate`	Displays the RF-ID of the carrier currently located at the gate, if present and the sample ID, if any.
`Error Code`	Error code related to the Module, if any.

Table 196: Gates function buttons

Function button	Access level	Description
`Pass`	Supervisor	Activates the selected gate to allow a sample carrier to be released.
`Divert`	Supervisor	Performs diagnostics commands on the NSD devices.
`ACR`	Supervisor	Locks/unlocks the ACR device.
`Active Return`	Supervisor	Turns on the ATR motor.
`Read SID`	Supervisor	Allows to read the sample ID of tube.

6.4.4.5 Diagnostics - Robot

Select `Diagnostics – Robot` from the Module options menu.

Table 197: Diagnostics - Robot list box

Item	Description
`01 Balance Error`	Error code related to the Balance, if any.
`02 Centrifuge Error`	Error code related to the Centrifuge, if any.
`03 Actual Run Time (seconds)`	Configured duration of centrifugation spin cycle.
`04 Actual Run Time Tolerance (1-60 seconds)`	Actual centrifugation time tolerance set.
`05 Actual Speed (1000-4500 RPM)`	Actual value of speed.
`06 Actual Temperature (-20-40° C)`	Actual value of temperature.
`07 Actual Temperature Tolerance (1-10°C)`	Actual temperature tolerance set before going into temperature error.
`08 Actual Acceleration Level (1-9)`	Actual level of acceleration.
`09 Actual Deceleration Level (0-9)`	Actual level of deceleration.
`10 Actual Temperature warning query frequency (seconds)`	Number of seconds which the module can exceed the maximum temperature.
`11 Actual Max temperature warning occurrences (1-5)`	Number of times excessive temperature is accepted.
`12 Actual Batch Size (4-80)`	Actual size of batch.
`13 Actual Timeout From Last Unloaded Tube (seconds)`	Number of minutes since the last routine sample tube scheduled for centrifugation has been unloaded on the bucket inserts by the robot. When this time elapsed, even if the Centrifuge batch size is not met, the bucket inserts are loaded into the Centrifuge and centrifugation begins.
`14 Actual Timeout From First Unloaded Tube (seconds)`	Number of minutes since the first routine sample tube scheduled for centrifugation has been unloaded on the bucket inserts by the robot. When this time elapsed, even if the Centrifuge batch size is not met, the bucket inserts are loaded into the Centrifuge and centrifugation begins.
`15 Actual Timeout From Last Unloaded STAT Tube (seconds)`	Number of minutes since the last STAT sample tube scheduled for centrifugation has been unloaded on the bucket inserts by the robot. When this time elapsed, even if the Centrifuge batch size is not met, the bucket inserts are loaded into the Centrifuge and centrifugation begins.

Table 197 Diagnostics - Robot list box (cont'd.)

Item	Description
`16 Actual Timeout From First Unloaded STAT Tube (seconds)`	Number of minutes since the first STAT sample tube scheduled for centrifugation has been unloaded on the bucket inserts by the robot. When this time elapsed, even if the Centrifuge batch size is not met, the bucket inserts are loaded into the Centrifuge and centrifugation begins.
`17 Actual Minimum Tube Weight (mg)`	Indicates the actual minimun weight of tube.
`18 Actual Maximum Tube Weight (mg)`	Indicates the actual maximum weight of tube.
`19 Actual Gripper Encoder (1/10 mm)`	Actual position of the robot gripper opening.
`20 Actual Axis X Encoder (1/10 mm)`	Actual position of the robot X axis.
`21 Actual Axis Y Encoder (1/10 mm)`	Actual position of the robot Y axis.
`22 Actual Axis Z Encoder (1/10 mm)`	Actual position of the robot Z axis.
`23 Executed Rotor Centrifugation Cycles`	Counter of Rotor Centrifugation Cycles.
`24 Executed Buckets Centrifugation Cycles`	Counter of Buckets Centrifugation Cycles.
`25 Elapsed Buckets Service Life (0-60 months)`	Counter of Buckets Service Life.
`26 Hettich Software Version`	Hettich Software version installed.
`27 Buckets Remaining Time To Service Life Expiration (months)`	Remaining time of buckets to expiry.
`28 Buckets Service Life Expiration Date`	Indicates the buckets expiration date (YYYY-MM-DD).
`Error Code`	Error code related to the Module, if any.

Table 198: Diagnostics - Robot function buttons

Function button	Access level	Description
`Init`	Supervisor	Allows to initialize the robot gripper.
`Home`	Supervisor	Moves the Robot to Home Position.
`Move`	Supervisor	Moves the Robot to the selected position.
`Approach`	Supervisor	Moves the Robot above the selected position.

Table 198 Diagnostics - Robot function buttons (cont'd.)

Function button	Access level	Description
`Arm`	FSE	Moves the robot arm.
`Tube Gripper`	Supervisor	Allows to open/close the robot gripper.
`Pick`	FSE	Allows the Robot to reach the tube in the selected location and pick it with gripper.
`Place`	FSE	Allows the Robot to place the tube currently in gripper in the selected location.

6.4.4.6 Diagnostics - Centrifuge, Balance and Bucket

Select `Diagnostics – Centrifuge, Balance and Bucket` from the Module options menu.

Refer to Table 197 *Diagnostics - Robot list box*, page 487 for further information.

⚠ WARNING

Pinch hazard

Ensure Centrifuge Module Lid has stopped all movements before accessing Centrifuge Module.

⚠ WARNING

Potential Biohazard.

Aerosol particles generated through the sample centrifugation can be spread in the air and inhaled by the Operator when the centrifuge lid is open.

Use personal protective equipment (i.e. gloves, goggles and mask) prior to open the Centrifuge lid.

Table 199: Diagnostics - Centrifuge, Balance and Bucket function buttons

Function button	Access level	Description
`Weigh`	Supervisor	Weighs the input buckets.
`Lid`	Supervisor	Opens/closes the Centrifuge Lid.
`Rotate Bucket`	Supervisor	Rotates the rotor to bring the requested bucket at the Lid position.

Table 199 Diagnostics - Centrifuge, Balance and Bucket function buttons (cont'd.)

Function button	Access level	Description
`Reset Counters`	FSE	• Resets the counter of centrifugation cycles of the buckets. • Resets the counter of centrifugation cycles of the rotor.
`Set Buckets Expiration Date`	FSE	Allows to insert the buckets expiration date (YYYY-MM-DD).

6.4.4.7 Diagnostics - Centrifuge Module Database

Select `Diagnostics – Centrifuge Module Database` from the Module options menu.

Refer to Table 197 *Diagnostics - Robot list box*, page 487 for further information.

Table 200: Diagnostics - Centrifuge Module Database function buttons

Function button	Access level	Description
`Remove tubes and batches, reset buckets position`	FSE	Press this button when all sample tubes have been physically removed from all the buckets (from input/output areas and inside the Centrifuge).
`Remove tube or bucket from gripper`	FSE	Press this button when a sample tube or a bucket has been physically removed from the gripper.

6.5 Decapper Module

6.5.1 Description

The Decapper Module automates the removal of the closures from sample tubes, processing different tube types and sizes simultaneously. The cap is removed and discarded into the Decapper waste container.

Figure 106: Decapper Module

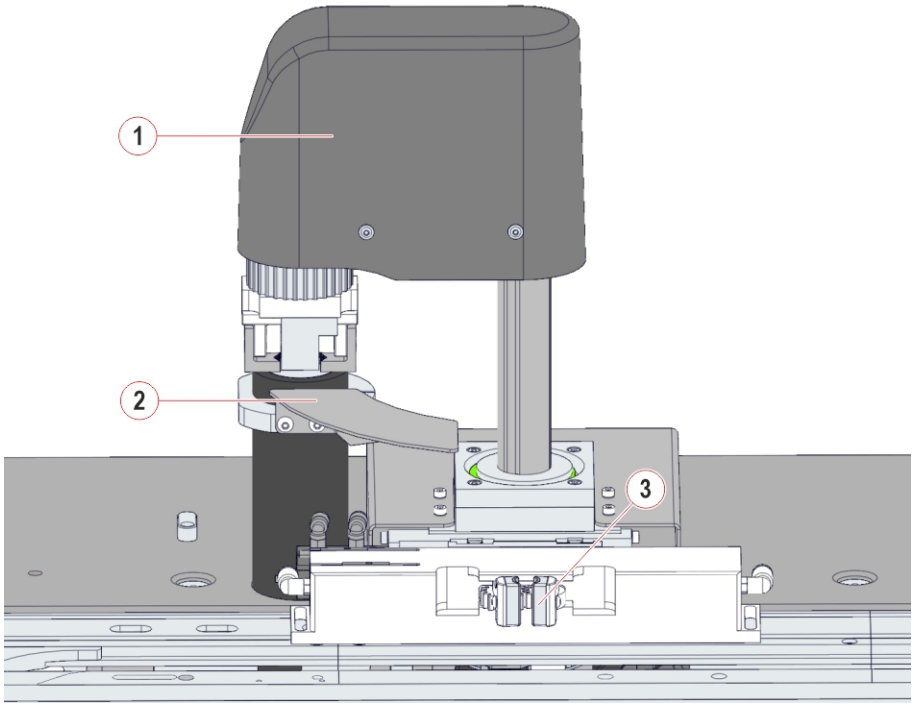

1. Decapper Head
2. Drip Tray
3. Gripper Pads

Figure 107: Decapper waste container

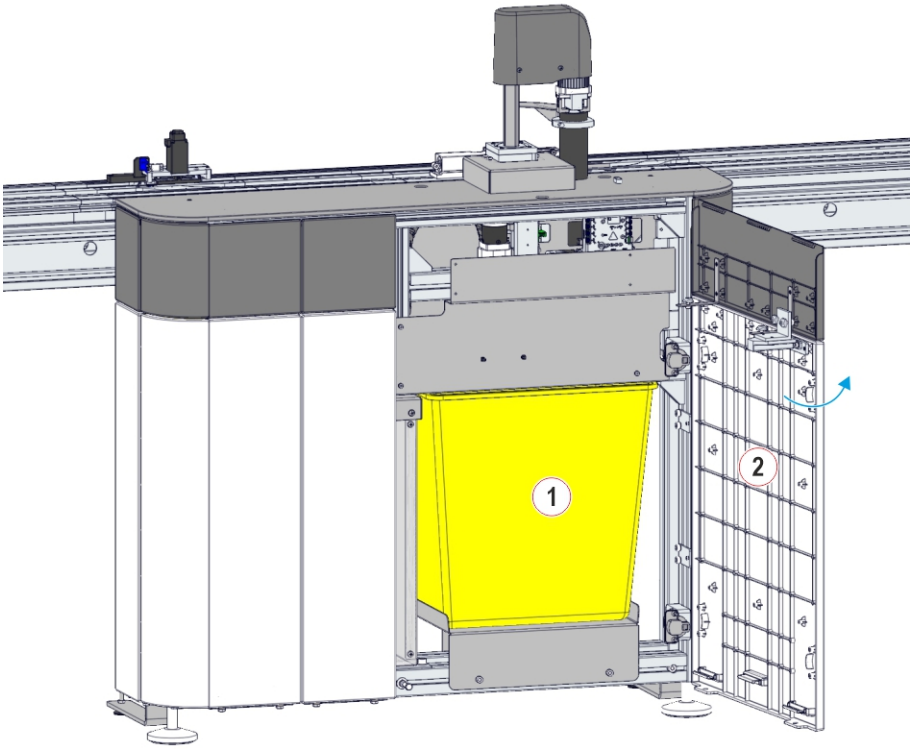

1. Decapper Module waste container
2. Decapper Module door

Observe the following instructions to ensure proper processing of the samples when using the Module:

Table 201: Allowable Sample Tube Types

Diameter (min-max) [mm] [52]	Length (min-max) [mm] [52]	Capped	Centrifuged	Source	Notes
11-16	65-100	Yes	No restrictions	Automation System	None

⚠ CAUTION

Sample tube wrongly processed.

Sample ID mismatch due to sample tubes movement by the Operator.

Remove the safety shield from the Module when requested only.

52. Nominal dimension (uncapped)

⚠ CAUTION

Sample tube wrongly processed. Tube lost. Tube crash.

Sample ID mismatch due to sample tubes movement by the Operator.

Access to the sample processing area only when requested.

6.5.2 Composition

Figure below shows the path of the carriers along the Buffer lane.

Figure 108:

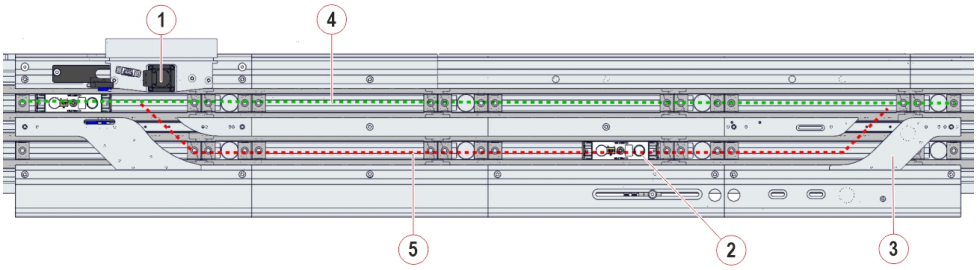

1. NSD device
2. Process Gate
3. ATR device
4. Main Lane
5. Secondary Lane

6.5.3 Module functioning

The process is split in the following phases:

1. The tube requiring decapping is held by the tube gripper in the Decapping position.
2. The Decapper Module head is lowered to reach the tube cap.
3. When the cap is removed, the Decapper head is lifted and then rotated at the waste position and releases the cap into the waste container.
4. The tube gripper opens to release the decapped sample tube that proceeds on the main lane to continue its process on the Automation System.

⚠ WARNING

Potential Biohazard.

The Decapper Module, during its normal decapping operation, could emit hazardous aerosol vapors coming from tubes. Biohazardous material may be present on the Tube Gripper surfaces. The Decapper Module must operate with the proper protection cover in place. Failure to comply could cause erroneous results due to contamination of samples or injury to personnel due to aerosol vapors or biohazardous material.

NOTICE

Head impact with the drip tray during initialization.

Before initializing the module, make sure that the Decapper head is positioned as shown in Figure 109 .

Figure 109:

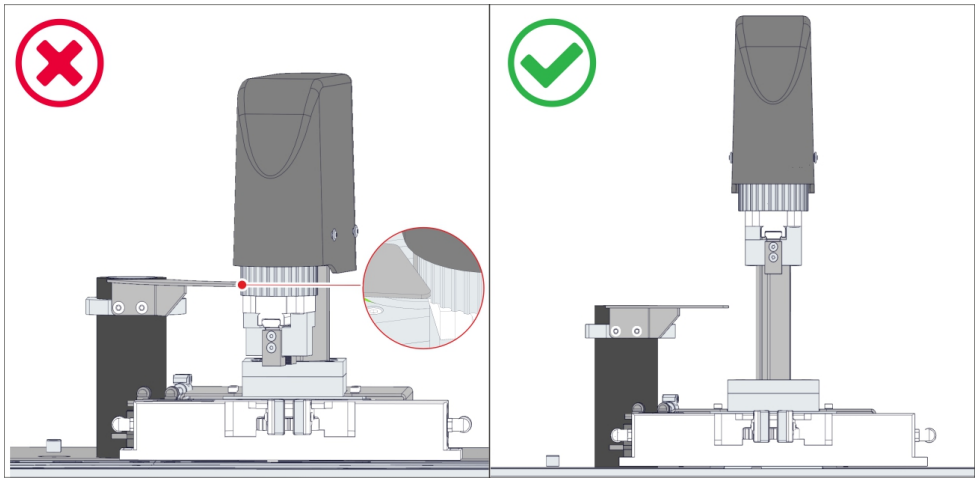

6.5.4 Status, diagnostics and settings

To access the information about status, diagnostics and setting related to the Module, select:

1. `Overview`
2. `Decapper`

NOTE
Common Function buttons are also available in the following screens.

6.5.4.1 Status

Select `Status` from the Module options menu.

Table 202: Status list box

Item	Description
`Node ID`	Identifier assigned to the Module during the Automation System configuration.
`Room for Empty Carriers`	Number of empty carriers that can currently enter the Module buffer.
`Room for Routine Samples`	Number of routine samples that can currently enter the Module buffer.
`Room for STAT Samples`	Number of STAT samples that can currently enter the Module buffer.

6.5.4.2 Settings

Select `Settings` from the Module options menu.

Table 203: Settings list box

Item	Description
`Error Code`	Error code related to the Module.
`Module Version`	Item not used.
`Number of caps not dropped`	Displays the number of caps not dropped into the waste bin.
`Number of caps in Waste Bin`	Displays the number of caps into the waste bin.
`Error Threshold Caps In Bin`	Displays the number of caps set for the error threshold.
`Warning Threshold Caps In Bin`	Displays the number of caps set for the warning threshold.

Table 204: Setting function buttons

Function button	Access level	Description
`Caps Bin`	FSE	Sets the error/warning threshold.
`Teach`	FSE	Allows to teach the De-capper positions.
`Pad`	FSE	Opens and closes or moves the gripper pad up/down.
`Move`	FSE	Moves the Decapper on the selected position.
`Position`	FSE	Displays the Roto/Traslo axis position.

6.5.4.3 Gates

Select `Gates` from the Module options menu.

Table 205: Gates list box

Item	Description
`Process Gate`	Displays the RF-ID of the carrier currently located at the gate and the sample ID, if available.

Table 206: Gates function buttons

Function button	Access level	Description
`Pass`	Supervisor	Activates the selected gate to allow a sample carrier to pass.
`Divert`	Supervisor	Activates the selected gate to allow a sample carrier to be diverted.
`Active Return`	Supervisor	Turns on the ATR motor.

6.5.4.4 Diagnostics

Select `Diagnostics` from the Module options menu.

Table 207: Diagnostics list box

Item	Description
`01 Standard Error Status`	Displays a standard error code.
`02 NSD Error Status`	Displays an error code related to NSD device.
`03 Stop Gate Error Status`	Displays an error code related to the Stop Gate.
`04 ATR Error Status`	Displays an error code related to ATR device.
`05 Head Error Status`	Displays an error code related to the head.
`06 TOM Error Status`	Displays an error code related to TOM device.
`07 Module Generic Error Status`	Displays a Module generic error code.
`08 Number of stress test executed cycles`	Displays the number of cycles of stress test executed.

Table 208: Diagnostics function buttons

Function button	Access level	Description
`Init`	Supervisor	Initializes the Decapper module.
`Motors`	FSE	Turns on/off and home of the Roto and Traslo motors.
`Pad`	FSE	Opens and closes or moves the gripper pad up/down.
`Move`	FSE	Moves the Decapper on the selected position.[53]
`Head`	FSE	Moves the Decapper Head and switches on/off the motors.
`Decap`	FSE	Activates a complete decapping process of the sample tube currently located at the decap position.
`Position`	FSE	Displays the Roto/Traslo axis position.

53. In case of movement to the lowest position, before executing the command, the System prepares to perform it.

6.5.4.5 Diagnostics – Hardware Stress Test

Select `Diagnostics – Hardware Stress Test` from the Module options menu.

Refer to Table 207 *Diagnostics list box*, page 499 for further information.

Table 209: Diagnostics – Hardware Stress Test function buttons

Function button	Access level	Description
`Start`	FSE	Allows to start the hardware stress test with tube or without tube.
`Stop`	FSE	Allows to stop the stress test before the end of the number of cycles.

6.6 Sealer Module

6.6.1 Description

The Sealer Module allows automatic sealing of plastic sample tubes after analytical processing. At the Sealer Module, the gripper holds the sample tube while it is sealed with aluminum foil from the Sealer coil. Individual foil seals are cut for each sample tube and heat-sealed to the plastic sample tube. The tube carrier approaches the Sealer Module and is stopped. If the sample tube requires sealing, the tube carrier is diverted to the Secondary Lane. Sample tubes not requiring sealing bypass the Sealer Module and move along the Main Lane.

Figure 110: Sealer Module

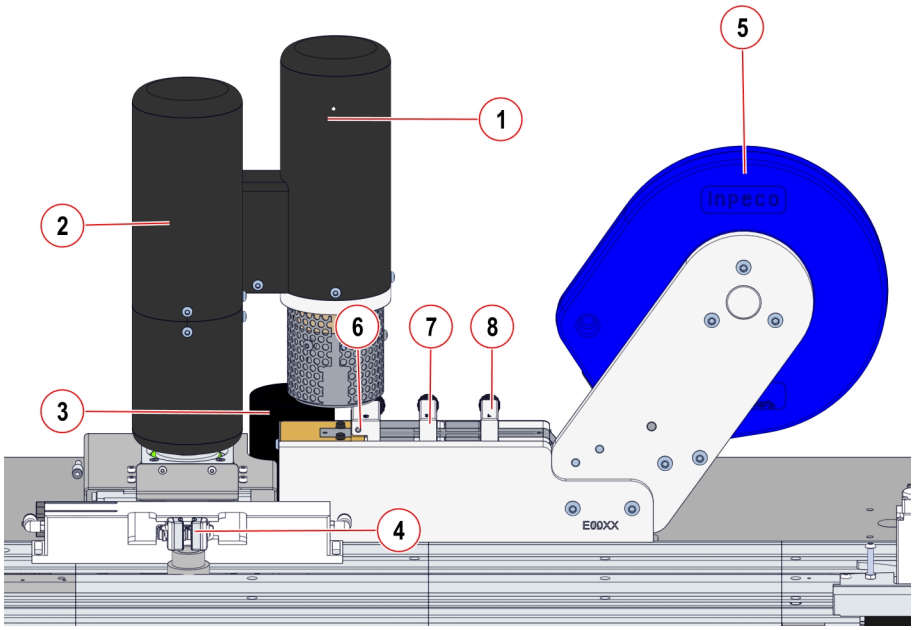

1. Heater
2. Crimper
3. Waste
4. Gripper Pads
5. Sealer reel
6. Cutter
7. Puller
8. Locker

Observe the following instructions to ensure proper processing of the samples when using the Module:

Table 210: Allowable Sample Tube Types

Diameter (min-max) [mm] [54]	Length (min-max) [mm] [54]	Capped	Centrifuged	Source	Notes
11-16	65-100	No	No restrictions	Automation System	None

⚠ CAUTION

Sample tube wrongly processed. Tube lost. Tube crash.

Sample ID mismatch due to sample tubes movement by the Operator.

Access to the sample processing area only when requested.

NOTICE

Only plastic tubes can be sealed by the Sealer Module.

54. Nominal dimension (uncapped)

6.6.2 Composition

Figure below shows the path of the carriers along the Buffer lane.

Figure 111:

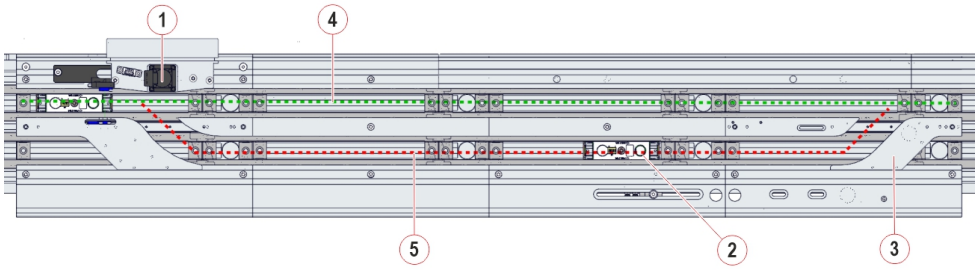

1. NSD device
2. Process Gate
3. ATR device
4. Main Lane
5. Secondary Lane

6.6.3 Module functioning

The process is split in the following phases:

1. At the Sealer Module, the sample tube is stopped at the Seal Gate.
2. The tube grippers hold the sample tube while it is sealed.
3. The aluminum foil is moved forward by the Puller, the Cutter moves down, and a piece of foil is cut.
4. The Heater head picks up the cut aluminum foil (by means of the Picker), rotates to the sample tube, and the Heat seals the foil to the tube.
5. The Crimper rotates and forms the foil around the top of the tube.
6. Once the sample tubes are sealed, they are moved to the Storage and Retrieval Module (when available) or Input/Output Module into an appropriate output rack.

NOTICE

The compressed air circuit stays in pressure when you open the safety shield over the Sealer Module.

If necessary, use the diagnostics commands to switch off the compressed air in order to avoid unnecessary waste.

When you switch off the compressed air, remove any foil that could fall from the Sealer head.

Note that:

- In case of Vision System installed and enabled on the Automation System with Sealer Module, for each sample tube the sealing time is applied according to Tube Type recognized by Vision System and values defined.
- In case of a Vision System not installed or installed but disabled on the Automation System with Sealer Module, for each sample tube the sealing time applied is the default one.

6.6.4 Status, diagnostics and settings

To access the information about status, diagnostics and setting related to the Module, select:

1. `Overview`
2. `Sealer`

NOTE
Common Function buttons are also available in the following screens.

6.6.4.1 Status

Select `Status` from the Module options menu.

Table 211: Status list box

Item	Description
`Node ID`	Identifier assigned to the Module during the Automation System configuration.
`Room for Empty Carriers`	Number of empty carriers that can currently enter the Module buffer.
`Room for Routine Samples`	Number of routine samples that can currently enter the Module buffer.
`Room for STAT Samples`	Number of STAT samples that can currently enter the Module buffer.

6.6.4.2 Settings

Select `Settings` from the Module options menu.

Table 212: Settings list box

Item	Description
`01 Negative delta sealing temperature (°C)`	Displays the negative delta sealing temperature.
`02 Positive delta sealing temperature (°C)`	Displays the positive delta sealing temperature.
`03 Heater temperature Setpoint (°C)`	Displays the temperature to be reached to start sealing process.
`04 Number of Foils in a New Reel`	Displays the number of foils in a new reel.
`05 Number of Foils to cut in Init Reel`	Displays the number of foils to cut during reel initialization.
`06 Warning Threshold Foils in Reel`	Displays the number of foils in reel set for the warning threshold.
`07 Number of Foils in Reel`	Displays the number of foils in Reel.
`08 Warning Threshold Foils in Bin`	Displays the number of foils in bin set for the warning threshold.
`09 Number of foils in Waste Bin`	Displays the number of foils in waste bin.
`10 Heater maximum temperature (°C)`	Displays the maximum temperature of Heater.
`11 Heater begin steady state temperature (°C)`	Displays the temperature to be reached to enter steady state.
`12 Heater switch On time in steady state (s)`	Displays how long the Heater switch on during steady state.
`13 Heater switch Off minimum time in steady state (s)`	Displays how long the Heater switch off during steady state.
`14 Heater maximum activation time (s)`	Displays the maxiumum activation time of the Heater.
`15 Default Sealing Time (ms)`	Displays the default sealing time.
`16 Sealing Time 13x75mm`	Displays the sealing time of the 13x75 sample tubes. If this value is 0, the default sealing time is considered.
`17 Sealing Time 13x100mm`	Displays the sealing time of the 13x100 sample tubes. If this value is 0, the default sealing time is considered.
`18 Sealing Time 16x75mm`	Displays the sealing time of the 16x75 sample tubes. If this value is 0, the default sealing time is considered.
`19 Sealing Time 16x100mm`	Displays the sealing time of the 16x100 sample tubes. If this value is

Table 212 Settings list box (cont'd.)

Item	Description
	0, the default sealing time is considered.
`20 Sealing Time Sarstedt 15x75mm`	Displays the sealing time of the Sarstedt 15x75 sample tubes. If this value is 0, the default sealing time is considered.
`21 Sealing Time Sarstedt 13x90mm`	Displays the sealing time of the Sarstedt 13x90 sample tubes. If this value is 0, the default sealing time is considered.
`22 Sealing Time Secondary Tube`	Displays the sealing time of the Secondary tube. If this value is 0, the default sealing time is considered.
`23 Sealing Time Sarstedt 15x90mm`	Displays the sealing time of Sarstedt 15x90 sample tubes. If this value is 0, the default sealing time is considered.
`24 Sealing Time Sarstedt 13x75mm`	Displays the sealing time of Sarstedt 13x75 sample tubes. If this value is 0, the default sealing time is considered.
`25 Sealing Time 13x82mm`	Displays the sealing time of 13x82 sample tubes. If this value is 0, the default sealing time is considered.
`26 Sealing Time Greiner Mini Collect 13x75mm`	Displays the sealing time of Greiner Mini Collect 13x75 sample tubes. If this value is 0, the default sealing time is considered.
`27 Sealing Time BD Map Chemistry 13x75mm`	Displays the sealing time of BD Map Chemistry 13x75mm sample tubes. If this value is 0, the default sealing time is considered.
`28 Sealing Time BD Map Hema 13x75mm`	Displays the sealing time of BD Map Hema 13x75mm sample tubes. If this value is 0, the default sealing time is considered.
`29 Sealing Time Sarstedt Microvette APT`	Displays the sealing time of Sarstedt Microvette APT sample tubes. If this value is 0, the default sealing time is considered.
`30 Sealing Time Sarstedt Monovette 11x66mm`	Displays the sealing time of Sarstedt Monovette 11x66mm sample tubes. If this value is 0, the default sealing time is considered.
`31 Sealing Time Sarstedt Microvette Capillary Cap`	Displays the sealing time of Sarstedt Microvette Capillary Cap sample tubes. If this value is 0, the default sealing time is considered.

Table 213: Setting function buttons

Function button	Access level	Description
`Move`	FSE	Moves the Sealer on the selected position.
`Approach`	FSE	Moves the robot toward the selected position.
`Teach`	FSE	Allows to teach the Sealer positions.
`Position`	FSE	Displays the Roto/Traslo axis position.
`Setup`	Supervisor/FSE	Allows to set: • Number of foils in a new reel • Number of foils remaining to raise warning • Number of foils in bin to raise warning
`Bin`	Supervisor	Reset foils in bin

6.6.4.3 Gates

Select `Gates` from the Module options menu.

Table 214: Gates list box

Item	Description
`01 Process Gate`	Displays the RF-ID of the carrier currently located at the gate, if present and the sample ID, if any.

Table 215: Gates function buttons

Function button	Access level	Description
`Pass`	Supervisor	Activates the selected gate to allow a sample carrier to pass.
`Divert`	Supervisor	Activates the selected gate to allow a sample carrier to be diverted.
`ATR`	Supervisor	Turns on the ATR motor.

6.6.4.4 Diagnostics

Select `Diagnostics` from the Module options menu.

Table 216: Diagnostics list box

Item	Description
`01 NSD Errors Status`	Displays an error code related to NSD device.
`02 Process Gate Errors Status`	Displays an error code related to the process Gate.
`03 ATR Errors Status`	Displays an error code related to ATR device.
`04 TOM Errors Status`	Displays an error code related to TOM device.
`05 Process Task Errors Status`	Displays an error code related to process task.
`06 Heater Errors Status`	Displays an error code related to the heater.
`07 Air Pressure Sensor Errors Status`	Displays an error code related to the air pressure sensors.
`08 Security Switch Errors Status`	Displays an error code related to the security switch.
`09 Foil Cutting Device Errors Status`	Displays an error code related to foil cutting device.
`10 Head Errors Status`	Displays an error code related to the head.
`11 Generic Error Status`	Displays a generic error code.
`12 Standard Error Status`	Displays a standard error code.
`13 Actual Heater Temperature (°C)`	Displays the actual temperature of Heater.
`14 Heater Controller is active`	Displays if the device is on/off: • 1 – On • 0 – Off
`15 Heater output is active`	Displays if the device is on/off: • 1 – On • 0 – Off
`16 Heater is in Steady State Range`	Displays if the Heater reaches the target temperature: • 1 – Yes • 0 – No
`17 Number of stress test executed cycles`	Displays the number of cycles of stress test executed.

Table 217: Diagnostics function buttons

Function button	Access level	Description
`Init`	Supervisor	Initializes the Sealer module.
`Motors`	FSE	Turns on/off and home of the Roto and Traslo motors.
`Pad`	FSE	Opens and closes or moves the gripper pad up/down.
`Move`	FSE	Moves Sealer on the selected position
`Position`	FSE	Displays the Roto/Traslo axis position.
`Reel`	Supervisor	Allows to prepare the Sealer reel for change, cut and waste foil and initialize foil.

6.6.4.5 Diagnostics – Sealing Head

Select `Diagnostics – Sealing Head` from the Module options menu.

Refer to Table 216 *Diagnostics list box*, page 510 for further information.

Table 218: Diagnostics – Sealing Head function buttons

Function button	Access level	Description
`Seal`	FSE	Activates a complete sealing process of the sample tube currently located at the seal position.
`Heater`	FSE	Allows to switch On/Off the Heater.
`Maker`	FSE	Allows to move Up/ Down the Maker.

6.6.4.6 Diagnostics – Seal Loader

Select `Diagnostics – Seal Loader` from the Module options menu.

Refer to Table 216 *Diagnostics list box*, page 510 for further information.

Table 219: Diagnostics – Seal Loader function buttons

Function button	Access level	Description
`Foil Locker`	FSE	Activates the Locker to block the aluminum foil during foil cut.
`Foil Gripper`	FSE	Allows to raise/lower the Foil Gripper.
`Foil Puller`	FSE	Activates the Puller to move the aluminum foil forward, before cutting it.
`Foil Cutter`	FSE	Activates the Cutter to cut the foil.
`Picker`	FSE	Activates the Picker to pick up the aluminum foil from the cutting position.
`Air`	FSE	Activates and deactivates the vacuum to pick up the seal.

6.6.4.7 Diagnostics – Hardware Stress Test

Select `Diagnostics – Hardware Stress Test` from the Module options menu.

Refer to Table 216 *Diagnostics list box*, page 510 for further information.

Table 220: Diagnostics – Hardware Stress Test function buttons

Function button	Access level	Description
`Start`	FSE	Allows to start the hardware stress test with tube or without tube.
`Stop`	FSE	Allows to stop the stress test before the end of the number of cycles.

6.7 Desealer Module

6.7.1 Description

The Desealer module automates removal of aluminum seals from sample tubes. The aluminum seal (foil) is removed and discarded into the Desealer waste container. The tube carrier approaches the Desealer Module and is stopped. If the sample tube requires desealing, the tube carrier is diverted to the Secondary Lane. Sample tubes not requiring desealing bypass the Desealer Module and move along the Main Lane.

Figure 112: Desealer Module

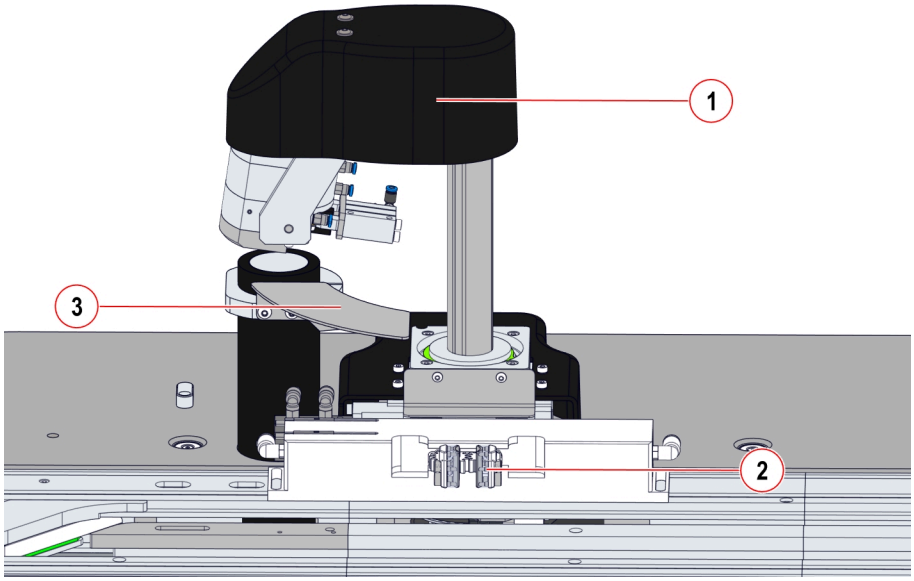

1. Desealer Head
2. Gripper Pads
3. Drip Tray

Figure 113: Desealer waste container

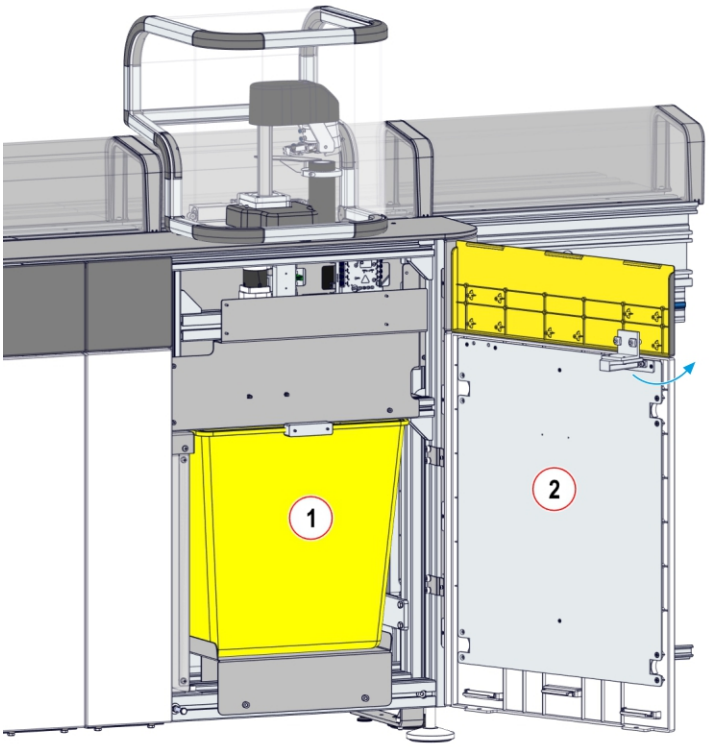

1. Desealer Module waste container
2. Desealer Module door

Observe the following instructions to ensure proper processing of the samples when using the Module:

Table 221: Allowable Sample Tube Types

Diameter (min-max) [mm] [55]	Length (min-max) [mm] [55]	Capped	Centrifuged	Source	Notes
11-16	65-100	No	No restrictions	Automation System	None

⚠ CAUTION

Sample tube wrongly processed. Tube lost. Tube crash.

Sample ID mismatch due to sample tubes movement by the Operator.

Access to the sample processing area only when requested.

NOTICE

Only sample tubes sealed by the Sealer Module can be routed to the Desealer Module.

55. Nominal dimension (uncapped)

NOTICE

Sample tubes with height in the range between 65 mm - 66 mm shall not be desealed more than one time.

6.7.2 Composition

Figure below shows the path of the carriers along the Buffer lane.

Figure 114:

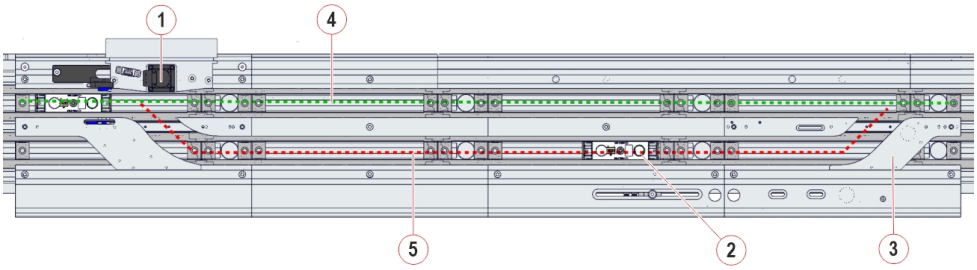

1. NSD device
2. Process Gate
3. ATR device
4. Main Lane
5. Secondary Lane

6.7.3 Module functioning

The process is split in the following phases:

1. At the Desealer Module, the sample tube is stopped at the Process Gate and the gripper holds the sample tube while it is desealed.
2. The Desealer head moves up, rotates to the sample tube then moves down to remove the seal.
3. After the seal is removed from the sample tube, the Desealer head rotates back to the home position and discards the seal into the Desealer waste container.
4. After the sample tube is desealed, the sample tube continues on the Main Lane for further processing.

6.7.4 Status, diagnostics and settings

To access the information about status, diagnostics and setting related to the Module, select:

1. `Overview`
2. `Desealer`

NOTE
Common Function buttons are also available in the following screens.

6.7.4.1 Status

Select `Status` from the Module options menu.

Table 222: Status list box

Item	Description
`Node ID`	Identifier assigned to the Module during the Automation System configuration.
`Room for Empty Carriers`	Number of empty carriers that can currently enter the Module buffer.
`Room for Routine Samples`	Number of routine samples that can currently enter the Module buffer.
`Room for STAT Samples`	Number of STAT samples that can currently enter the Module buffer.

6.7.4.2 Settings

Select `Settings` from the Module options menu.

Table 223: Settings list box

Item	Description
`01 Number of foils in Waste Bin`	Displays the number of foils in Waste Bin.
`02 Error Threshold Foils in Bin`	Displays the number of foils in bin set for the error threshold.
`03 Warning Threshold Foils in Bin`	Displays the number of foils in bin set for the warning threshold.

Table 224: Setting function buttons

Function button	Access level	Description
`Pad`	FSE	Opens and closes or moves the gripper pad up/down.
`Move`	FSE	Moves the Desealer on the selected position.
`Position`	FSE	Displays the Traslo/Roto axis position.
`Teach`	FSE	Allows to teach the Desealer positions.
`Foils Bin`	FSE	Allows to set the error/warning threshold.

6.7.4.3 Gates

Select `Gates` from the Module options menu.

Table 225: Gates list box

Item	Description
`01 Process Gate`	Displays the RF-ID of the carrier currently located at the gate and the sample ID, if available.

Table 226: Gates function buttons

Function button	Access level	Description
`Pass`	Supervisor	Activates the selected gate to allow a sample carrier to pass.
`Divert`	Supervisor	Activates the selected gate to allow a sample carrier to be diverted.
`ATR`	Supervisor	Turns on the ATR motor.

6.7.4.4 Diagnostics

Select `Diagnostics` from the Module options menu.

Table 227: Diagnostics list box

Item	Description
`01 NSD Error Status`	Displays an error code related to NSD device.
`02 Stop Gate Error Status`	Displays an error code related to the Stop Gate.
`03 ATR Error Status`	Displays an error code related to ATR device.
`04 Head Error Status`	Displays an error code related to the Desealer head.
`05 TOM Error Status`	Displays an error code related to TOM device.
`06 Generic Error Status`	Displays a generic error code.
`07 Standard Error Status`	Displays a standard error code.
`08 Number of stress test executed cycles`	Displays the number of cycles of stress test executed.

Table 228: Diagnostics function buttons

Function button	Access level	Description
`Init`	Supervisor	Initializes the Desealer module.
`Deseal`	FSE	Activates a complete desealing process of the sample tube currently located at the process gate.
`Motors`	FSE	Turns on/off and home of the Roto and Traslo motors.
`Pad`	FSE	Opens and closes or moves the gripper pad up/down.
`Move`	FSE	Moves the Desealer on the selected position.
`Position`	FSE	Displays the Traslo/Roto axis position.

6.7.4.5 Diagnostics – Head

Select `Diagnostics – Head` from the Module options menu.

Refer to Table 227 *Diagnostics list box*, page 523 for further information.

Table 229: Diagnostics – Head function buttons

Function button	Access level	Description
`Nail`	FSE	Allows to push/pull the nail.
`Tilt`	FSE	Allows to activate/deactivate the tilt.
`Block foil`	FSE	Allows to move up/down the block foil.
`Air`	FSE	Allows activating/deactivating the air blow used to release the removed seal into the waste container.
`Foil`	FSE	Allows to grasp/drop the foil.

6.7.4.6 Diagnostics – Hardware Stress Test

Select `Diagnostics – Hardware Stress Test` from the Module options menu.

Refer to Table 227 *Diagnostics list box*, page 523 for further information.

Table 230: Diagnostics – Hardware Stress Test function buttons

Function button	Access level	Description
`Start`	FSE	Allows to start the hardware stress test with tube or without tube.
`Stop`	FSE	Allows to stop the stress test before the end of the number of cycles.