6.8 Storage and Retrieval Module

6.8.1 Description

The Storage and Retrieval Module allows to automatically store sample tubes in a protected environment and temperature controlled in the range 2°C to 20°C [35.6°F to 68°F].

When stored, sample tubes can be retrieved based on a Host LIS, Middleware or User request. After a predefined and configurable time interval, the sample tubes are discarded.

Figure 115: Storage and Retrieval Module

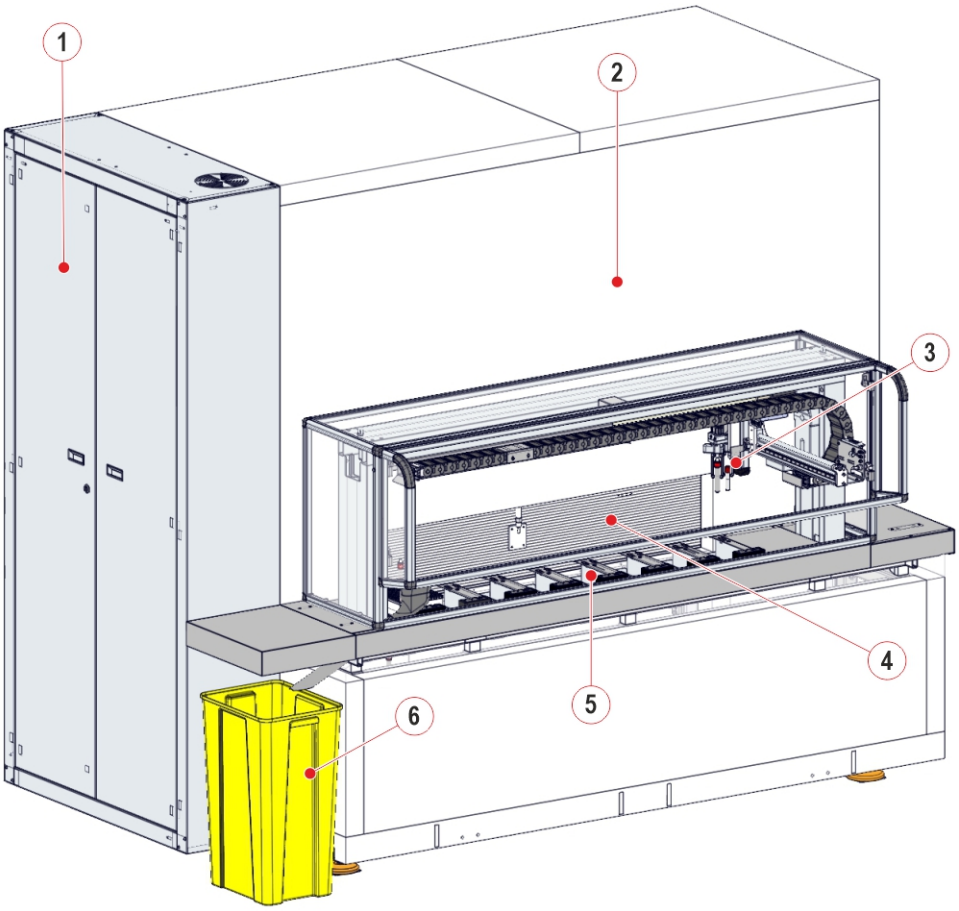

1. Cabinet
2. Refrigerated room
3. 2-gripper robot
4. Shutter
5. Worktable
6. Waste container

The Module is equipped with:

- a cabinet containing the electrical panel and the refrigerator unit for the cooling of the refrigerated room (aka Deposit).
- a worktable that interfaces with the Automation track to allow the pick-up, deposit, parking and disposal of the tubes during the work cycle.

- a waste container is provided by the Laboratory and shall respect the following dimensions:

Table 231: Waste container – Maximum dimensions

Dimensions	Max value
Height	640 mm [25.20 in]
Width	350 mm [13.78 in]
Depth	320 mm [12.60 in]

The worktable is designed to host 8 racks, 1 rack for each lane. Each rack can contain 96 tubes. Based on the functionality, there are 2 types of racks.

Table 232: Rack typologies

Type	Description
Storing rack	Rack containing sample tubes awaiting to be deposited in the refrigerated room.
Parking rack	Rack containing sample tubes temporary parked on the worktable, outside the refrigerated room, awaiting to be returned to the Automation track, in accordance with specific rules.

The figure below reports the map of the lanes on the worktable.

Figure 116: Lanes on the worktable

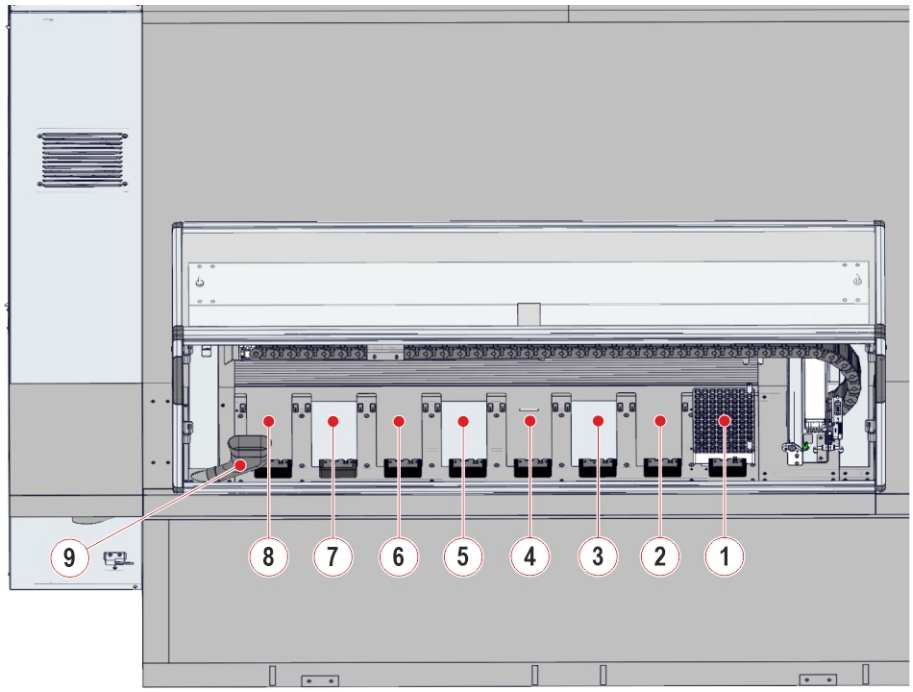

1. Lane 1
2. Lane 2

3. Lane 3
4. Lane 4
5. Lane 5
6. Lane 6
7. Lane 7
8. Lane 8
9. Waste position

Observe the following instructions to ensure proper processing of the samples when using the Module:

Table 233: Allowable Sample Tube Types

Diameter (min-max) [mm] [56]	Length (min-max) [mm] [56]	Capped	Centrifuged	Source	Notes
11-16	65-100	• Only capped or sealed sample tubes for storing and disposing operations. • No restrictions for parking operations.	No restrictions	Automation System	None.

Table 234: Power requirements of the refrigerator unit

Description	Value
Power Inlet Point	230V ~ single-phase
Mains Line Frequency	50/60 Hz
Power consumption	0.59 kW

NOTICE

Connect the refrigerator unit to an easily accessible power outlet with a protective grounding system.

56. Nominal dimension (uncapped)

6.8.2 Composition

Figure below shows the path of the carriers along the buffer lane.

Figure 117:

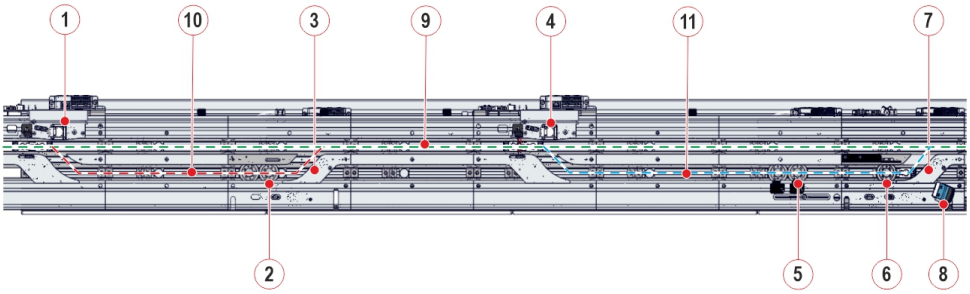

1. NSD 1 – First Input
2. First Process gate
3. ATR 1 – First
4. NSD 2 – Second Input
5. Second Process gate
6. Division gate + Barcode Reader gate + ACR device
7. ATR 2 – Second
8. Imager device
9. Main lane (Automation track lane)
10. Primary pit lane
11. Secondary pit lane

6.8.3 Module functioning

The process is split in the following phases:

1. When a sample tube approaching Storage and Retrieval Module requires to be stored or parked to the Module, the carrier with the tube is diverted either to the primary pit lane or to the secondary pit lane of the Module buffer lane.
2. The tube is stopped at the First Process gate of the primary pit lane or at the Second Process gate of the secondary pit lane. Because the 2-gripper robot can deposit up to 2 tubes at a time on the rack, 2 tubes can be queued at the First Process gate and Second Process gate.
3. The robot places the sample tube(s) in a dedicated rack on the worktable.
4. If the rack is designed to be a Storing rack, the telescopic axis of the stacker crane (aka Traslo) will move the rack from the worktable into the refrigerated room.
5. If the rack is designed to be a Parking rack, the rack remains on the worktable until all the sample tubes are returned to the Automation Track.
6. If a sample tube needs to be retrieved, the telescopic axis of the stacker crane (aka Traslo) will extract the rack with the sample tube from the refrigerated room on the worktable and the robot will deposit the tube on the carrier awaiting at the Second Process gate of the secondary pit lane. Before returning to the Automation track, the sample tube is identified by the Imager device at the Barcode Reader gate. Here, the Division gate located before the Barcode Reader gate splits carriers to allow the identification.
7. If a sample tubes needs to be discarded, the robot will extract the rack with the sample tube from the refrigerated room and move it to the Waste position. Then, the sample tube will be collected in the waste container.

6.8.4 Status, diagnostics and settings

To access the information about status, diagnostics and setting related to the Module, select:

1. `Overview`
2. `Storage`

NOTE
Common Function buttons are also available in the following screens.

6.8.4.1 Status

Select `Status` from the Module options menu.

Table 235: Status list box

Item	Description
`Node ID`	Identifier assigned to the Module during the Automation System configuration.
`Room for Empty Carriers`	Number of empty carriers that can currently enter the Module buffer.
`Room for Routine Samples`	Number of routine samples that can currently enter the Module buffer.
`Room for STAT Samples`	Number of STAT samples that can currently enter the Module buffer.

Table 236: Gates function buttons

Function button	Access level	Description
`Remove tube`	Operator	Press this button when a sample tube has been physically removed from the Module.

If the Storage and Retrieval Module is set to Going Off-line status while there are retrieval/keep requests still to be sent to the Module, a pop-up warns User that the Module will be automatically set off-line after that all the currently scheduled retrieval/keep commands will be sent to the Module. User can choose:

- `Going to Off-line` to confirm the choice to set the Module to Going to Off-line status. The Module will be set to Off-line statu only after all the retrieval/keep requests are sent to it.
- `Close` to abort, in this case the Module will stay in the current status.
- `Stand-by` to set the Module to Stand-by status.

NOTE

If the Storage and Retrieval Module is set to Off–line status and a new retrieval/keep command is received, a pop-up will warn User that the retrieval/keep command can no be sent to the Module because it is off-line.

6.8.4.2 Gates

Select `Gates` from the Module options menu.

Table 237: Gates list box

Item	Description
`First Process gate`	Displays the RF-ID of the carrier currently located at the gate, if present and the sample ID, if any.
`Second Process gate`	Displays the RF-ID of the carrier currently located at the gate, if present and the sample ID, if any.
`Barcode Reader gate`	Displays the RF-ID of the carrier currently located at the gate, if present and the sample ID, if any.
`Error Code`	Error code related to the Module.

Table 238: Gates function buttons

Function button	Access level	Description
`Pass`	Supervisor	Activates the selected gate to allow a sample carrier to be released
`Divert`	Supervisor	Performs diagnostics commands on the NSD devices.
`Active Return`	Supervisor	Turns on/off the ATR motor.
`Rotate`	Supervisor	Activates, stops, locks and unlocks the ACR device.
`Open`	Supervisor	Opens the Division gate.
`Close`	Supervisor	Closes the Division gate.
`Read SID`	Supervisor	Reads the barcode of the sample tube at the Barcode Reader gate by activating the Imager device.

6.8.4.3 Settings

Select `Settings` from the Module options menu.

Table 239: Settings list box

Item	Description
`01 Desired Deposit Temperature (Celsius)`	Desired Deposit Temperature set [°C].
`02 Desired Deposit Temperature (Fahrenheit)`	Desired Deposit Temperature set [°F].
`03 Actual Deposit Temperature (Celsius)`	Deposit temperature detected by the refrigerator unit [°C].
`04 Actual Deposit Temperature (Fahrenheit)`	Deposit temperature detected by the refrigerator unit [°F].
`05 Probe Temperature (Celsius)`	Deposit temperature detected by the probe [°C].
`06 Probe Temperature (Fahrenheit)`	Deposit temperature detected by the probe [°F].
`07 Warning threshold for Temperature (Celsius)`	Warning threshold set by the command `Temperatures gap Device T - Demanded T(C)`
`08 Warning threshold for Temperature (Fahrenheit)`	Warning threshold set by the command `Temperatures gap Device T - Demanded T(F)`
`09 Max number of tubes in Waste bin`	Max number of tubes that can be discarded in the waste container. Over this limit the waste container is considered full.
`10 Warning threshold of tubes in waste bin`	Number of tubes that can be discarded in the waste container. Over this limit the waste container is considered almost full.
`11 Disposed samples in waste bin`	Counter of the number of tubes discarded in the waste container.
`Error Code`	Error code related to the Module.

Table 240: Settings function buttons

Function button	Access level	Description
`Temp`	Supervisor	Sets the Desired Deposit Temperature [°C].
`Setup`	FSE	• `Temperatures gap Device T - Desired T(C)`: sets the temperature gap [°C] between the deposit temperature detected by the refrigerator unit and the Desired Deposit Temperature. • `Temperatures gap Device T - Desired T(F)`: sets the temperature gap [°F] between the deposit temperature detected by the refrigerator unit and the Desired Deposit Temperature. • `Max number of tubes in Waste bin`: sets the max number of tubes that can be discarded in the waste container. Over this limit the waste container is considered full. • `Warning threshold of tubes in wasted bin`: sets the number of tubes that can be discarded in the waste container. Over this limit the waste container is considered almost full.

6.8.4.4 Settings - Barcode Reader

Select `Settings` from the Module options menu.

Table 241: Gates list box

Item	Description
`Error Code`	Error code related to the Module.

Table 242: Settings - Barcode Reader function buttons

Function button	Access level	Description
`BCR Config`	FSE	Allows to configure the Imager device.

6.8.4.5 Diagnostics - IOM

Select `Diagnostics – IOM` from the Module options menu.

Table 243: Diagnostics - IOM list box

Item	Description
`Error Code`	Error code related to the Module.

Table 244: Diagnostics - IOM function buttons

Function button	Access level	Description
`Home`	Supervisor	Moves the robot to the Home position.
`Init Robot`	Supervisor	Initializes the robot.
`Move`	Supervisor	Moves the robot to: • `Track – First process gate` (Figure 118 - A) • `Track – Second process gate` (Figure 118 - B) • `Rack – P1` (Figure 118 - C) • `Rack – P2` (Figure 118 - D) • `Waste position` (Figure 118 - E)
`Gripper`	Supervisor	• Opens/closes the right robot gripper (Figure 119 - A) • Opens/closes the left robot gripper (Figure 119 - B) • Initializes both the robot grippers

Figure 118:

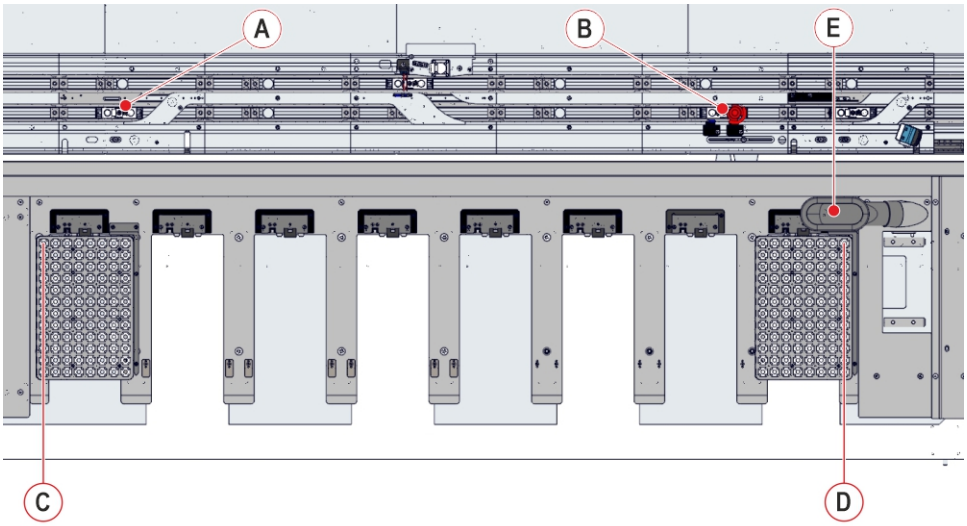

Figure 119:

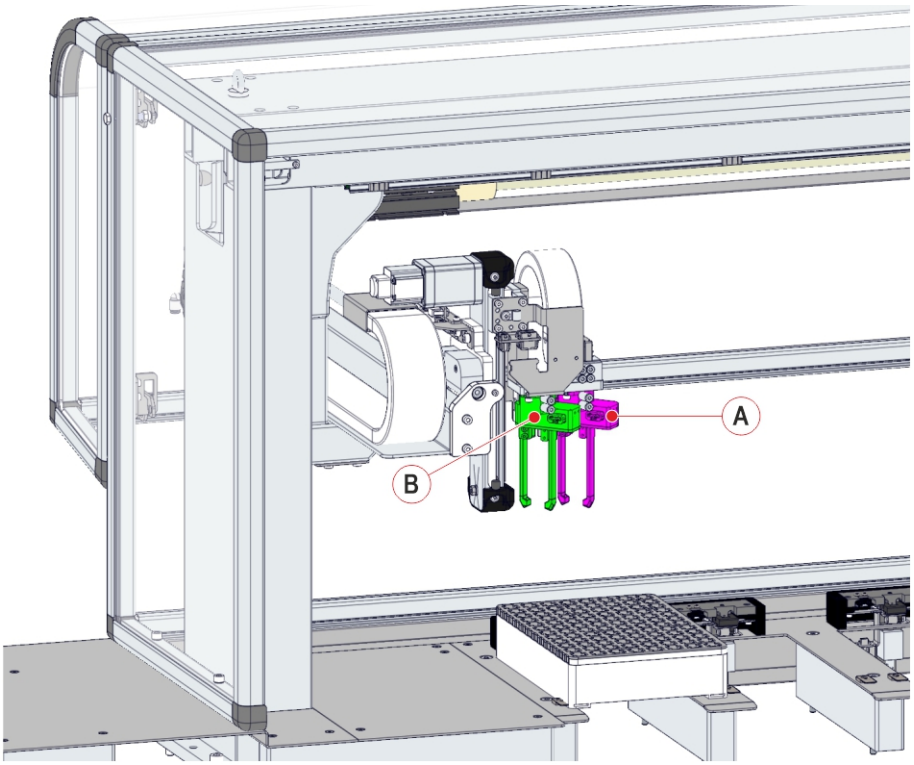

6.8.4.6 Diagnostics - Traslo

Select `Diagnostics – Traslo` from the Module options menu.

Table 245: Diagnostics - Traslo list box

Item	Description
`Error Code`	Error code related to the Module.

Table 246: Diagnostics - Traslo function buttons

Function button	Access level	Description
`Home`	Supervisor	Moves the Stacker Crane (aka Traslo) to the Home position.
`Init Robot`	Supervisor	Initializes the Stacker Crane (aka Traslo).
`Move`	Supervisor	Move the Stacker Crane (aka Traslo) to the safe position.

6.8.4.7 Diagnostics - Refrigerator

Select `Diagnostics – Refrigerator` from the Module options menu.

Table 247: Diagnostics - Refrigerator list box

Item	Description
`Error Code`	Error code related to the Module.

Table 248: Diagnostics - Refrigerator function buttons

Function button	Access level	Description
`Shutter`	Supervisor	Opens/closes the shutter of the refrigerated room.
`Lights`	Supervisor	Turns on/off the light inside the Refrigerated room.

6.8.4.8 Storage Table

Select `Storage Table` from the Module options menu.

This screen reports the following information.

Table 249: Storage Table list box

Item	Description
`Lane`	Number of the lane (for the map of lanes refer to Figure 116 *Lanes on the worktable*, page 527).
`Rack ID`	• Unique identifier of the rack placed on the lane. • `n/a` if the lane is vacant.
`Parking`	• `Yes` if the rack is a Parking rack. • `No` if the rack is a Storing rack.

Table 250: Storage Table function buttons

Function button	Access level	Description
`Lock Rack`	Supervisor	Locks the rack placed on the lane of the work-table (for the map of lanes refer to Figure 116 *Lanes on the worktable*, page 527).
`Unlock Rack`	Supervisor	Unlocks the rack placed on the lane of the work-table (for the map of lanes refer to Figure 116 *Lanes on the worktable*, page 527).

When the `Rack ID` in Table 249 *Storage Table list box*, page 538 is selected (Rack ID different from `n/a`), the Snapshot screen is open to displays sample tubes located in the specified Rack ID.

6.9 Track Module

6.9.1 Description

The Track Module controls the motion of sample tubes from the Input Modules to the Pre-Analytical Modules, if applicable, then to the Analyzers, subsequently to Post-Analytical Modules, if applicable, and finally either to the Storage and Retrieval Module or to the Output Modules.

Figure 120: Track Module

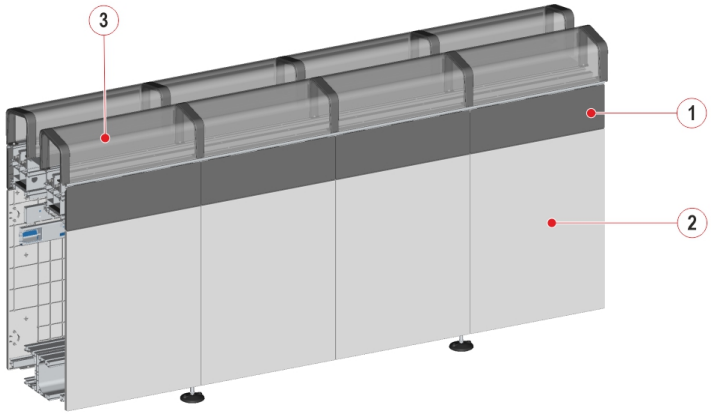

1. Central cover
2. Lower cover
3. Upper cover

Each sample tube is contained in a tube carrier equipped with a unique RF-ID to track the sample position at any gate. A main lane is used to move the tube carriers containing sample tubes to and from the Automation Modules and Analyzers. When a tube carrier approaches an Automation Module or Analyzer, the tube carrier may be diverted to a secondary lane for sample preparation (e.g. cenfrifugation, decapping, aliquoting, recappling, sealing, desealing etc.) or to an Analyzer for sample processing. The tube carrier is then returned to the main lane.

The tube carrier is diverted to a secondary lane through the NDS (No Stop Divert) device. Similarly, the tube carrier is returned to the main lane through the ATR (Active Track Return) device.

Figure 121: Track Module lanes

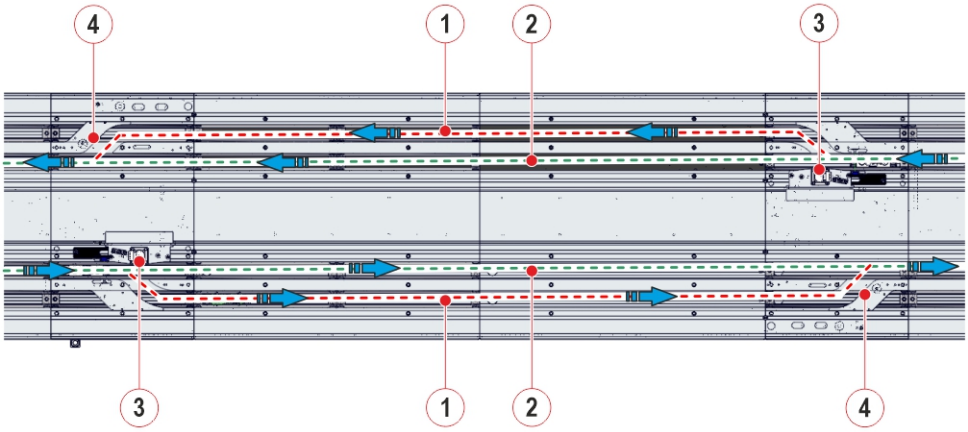

1. Secondary lane
2. Main lane
3. NSD device
4. ATR device

6.9.2 Composition

The Track Module is composed of multiple track segments to facilitate tube carrier approach to the Automation Modules or Analyzers.

Figure 122: Track Module components

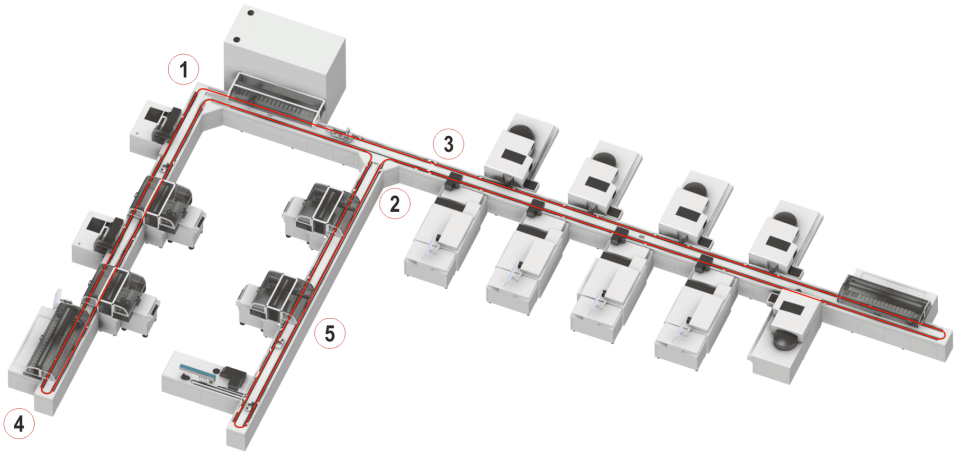

1. L-Turn Module
2. T-Turn Module
3. U-Turn Module
4. Track Head
5. Blank Track with Pass Node Module

The Track Module consists of the following segment types.

6.9.2.1 Track Head

The Track Head is the end of the track segment.

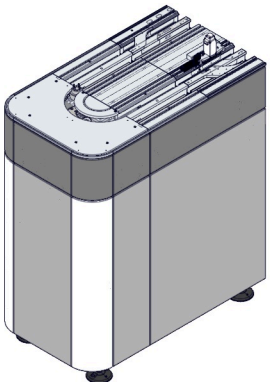

6.9.2.2 L-Turn Module

The L-Turn Module is placed in a 90 degree corner of the Automation Track.

The L-Turn Module allows the Automation System to assume an 'L' shaped layout. This is useful to reduce the Automation System length along one direction. The main purpose of the Module is to change the carrier direction of 90 degrees.

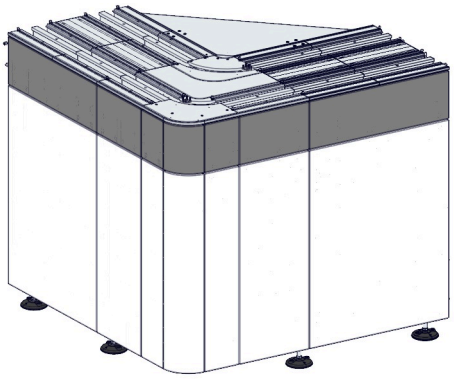

6.9.2.3 T-Turn Module

The T-Turn Module is an extension of the Track Module. It moves the tube carriers to the connected Analyzers and the Automation Modules.

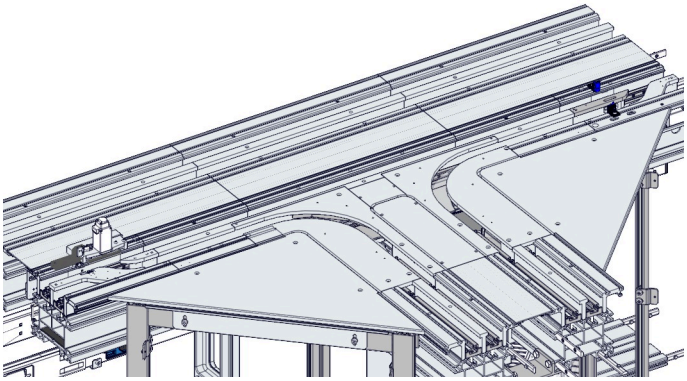

6.9.2.4 U-Turn Module

The U-Turn Module provides a shortcut in tube carrier routing to decrease the time required to reach the Analyzer or Module.

There are two different configurations of the U-Turn Module:

- external configuration (external U-Turn Module)

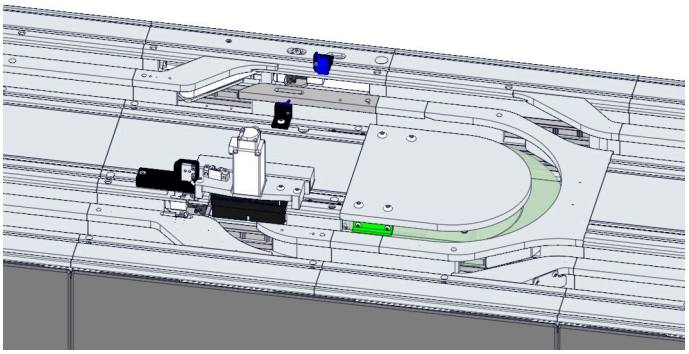

- internal configuration (internal U-Turn Module)

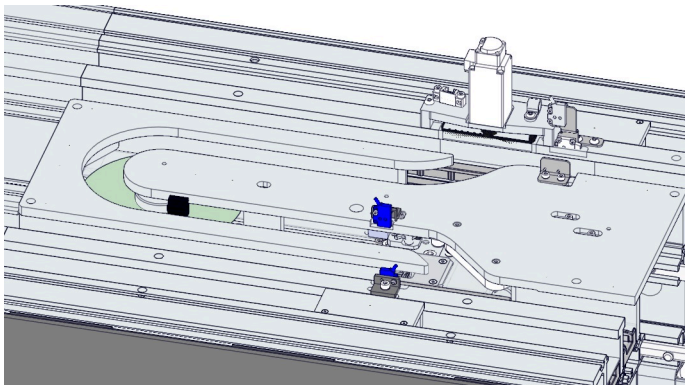

6.9.2.5 Blank Track with Pass Node Module

Blank Track with Pass Node Module is a long portion of the Automation Track not occupied by any process gate.

It is provided with Stop Gates and Antennas (circled in red) able to stop tube carriers routing on track and detects the tube presence.

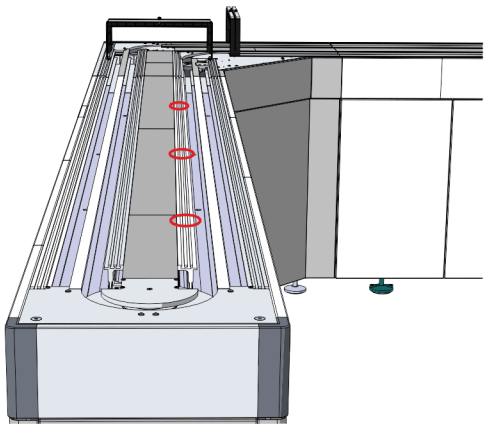

6.10 T-Turn Module

6.10.1 Description

The T-Turn Module allows the carriers to change their direction from the main flow to a secondary line of the track in order to reach their destination (Analyzer or Automation Module).

The secondary line is an extension of the Track Module; its length depends on the Automation System layout.

⚠ CAUTION
Sample tube lost or crashed. Delayed patient results due to a tube lost or crashed due to wrong recovery steps performed by the Operator. Contact FSE to remove possible fallen tubes.

6.10.2 Composition

The following figure shows the carrier path along the T-Turn Module.

Figure 123: T-Turn Module components

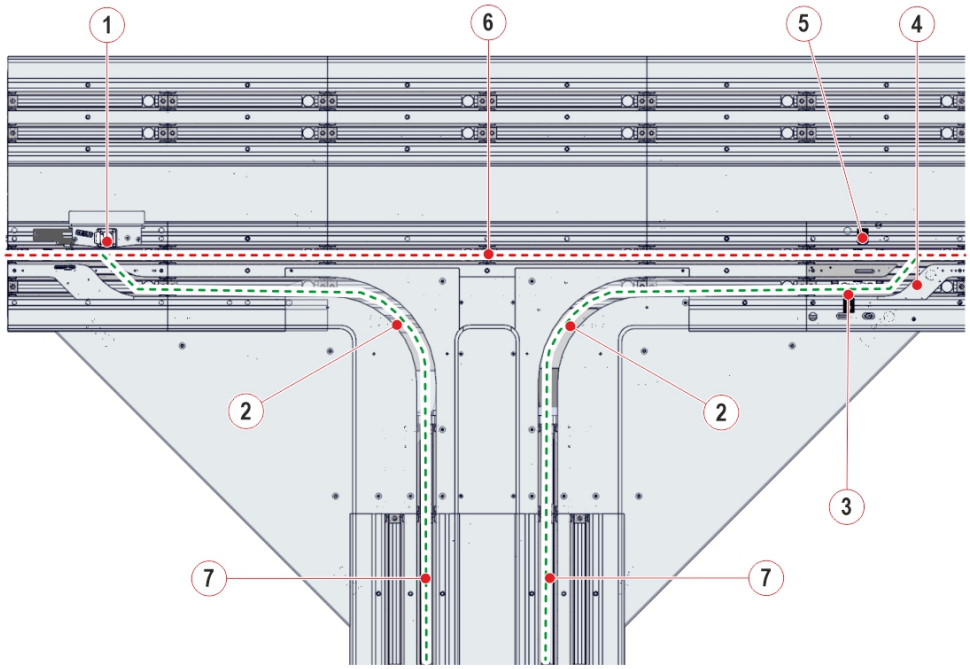

1. NSD
2. Disk
3. Main Lane Gate
4. ATR
5. Pit Lane Gate
6. Pit Lane (i.e. Secondary Lane)
7. Main Lane

6.10.3 Module functioning

The sample tube that approaches the Module is diverted to the track extension if it needs to be processed at the Automation Modules or Analyzers connected to the track extension. Otherwise, the sample tube proceeds on the main flow to reach its destination.

6.10.4 Status, diagnostics and settings

To access the information about status, diagnostics and setting related to the Module, select:

1. `Overview`
2. `Track`
3. `T-Module`

NOTE
Common function buttons are also available in the following screens.

6.10.4.1 Status

Select `Status` from the Module options menu.

Table 251: Status list box

Item	Description
`Node ID`	Identifier assigned to the Module during the Automation System configuration.
`Room for Empty Carriers`	Number of empty carriers that can currently enter the Module.
`Room for Routine Samples`	Number of routine sample tubes that can currently enter the Module.
`Room for STAT Samples`	Number of priority sample tubes that can currently enter the Module.

6.10.4.2 Settings

Select `Settings` from the Module options menu.

Table 252: Settings list box

Item	Description
`ByPass Mode (0=Off,1=On)`	Displays if the bypass mode is active or not.
`Error Code`	Error code related to the Module.
`Module Type (0=na,1=T,2=EU,3=IU)`	Displays the Module type configured for the specific node ID: • 0=na (Unknown) • 1=T (T-Turn Module) • 2=EU (External U-Turn Module) • 3=IU (Internal U-Turn Module)

Table 253: Settings function buttons

Function button	Access level	Description
`By-Pass`	FSE	Activates (deactivates) the bypass mode.

6.10.4.3 Gates

Select `Gates` from the Module options menu.

Table 254: Gates list box

Item	Description
`Error Code`	Error code related to the Module.
`Main Lane Gate`	• `0` if open • `1` if closed
`Pit Lane Gate`	• `0` if open • `1` if closed

Table 255: Gates function buttons

Function button	Access level	Description
`Divert`	Supervisor	Performs diagnostics commands on the NSD device.
`ATR`	Supervisor	Turns on/off the ATR belt motor.
`Lock Gate`	Supervisor	Closes the selected gate.
`Unlock Gate`	Supervisor	Opens the selected gate.

6.10.4.4 Diagnostics

Select `Diagnostics` from the Module options menu.

Table 256: Diagnostics list box

Item	Description
`Error Code`	Error code related to the Module.

6.11 External U-Turn Module

6.11.1 Description

The External U-Turn Module provides a short way for carriers to reach their destination on the Automation System by diverting them to a U-shaped lane connecting a portion of track with opposite flow direction.

In this configuration, carriers enter the Module to reverse the flow direction.

⚠ CAUTION

Sample tube lost or crashed.

Delayed patient results due to a tube lost or crashed due to wrong recovery steps performed by the Operator.

Contact FSE to remove possible fallen tubes.

6.11.2 Composition

The following figure shows the carrier path along the External U-Turn Module.

Figure 124: External U-Turn Module components

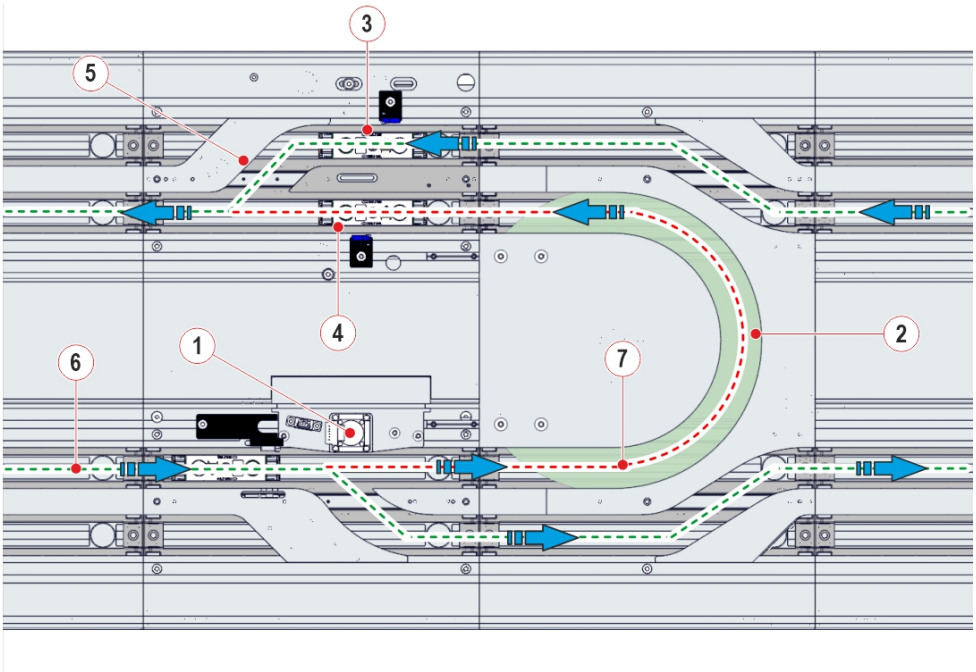

1. NSD
2. Disk
3. Main Lane Gate
4. Pit Lane Gate
5. ATR
6. Main Lane
7. Pit Lane (i.e. Secondary Lane)

6.11.3 Module functioning

The sample tube that approaches the Module enters the pit lane (i.e. Secondary Lane) and reverses its direction to reach its destination. Otherwise, the sample tube is diverted and proceeds on the long way.

6.11.4 Status, diagnostics and settings

To access the information about status, diagnostics and setting related to the Module, select:

1. `Overview`
2. `Track`
3. `External U-Turn`

NOTE
Common function buttons are also available in the following screens.

6.11.4.1 Status

Select `Status` from the Module options menu.

Table 257: Status list box

Item	Description
`Node ID`	Identifier assigned to the Module during the Automation System configuration.
`Room for Empty Carriers`	Number of empty carriers that can currently enter the Module.
`Room for Routine Samples`	Number of routine sample tubes that can currently enter the Module.
`Room for STAT Samples`	Number of priority sample tubes that can currently enter the Module.

6.11.4.2 Settings

Select `Settings` from the Module options menu.

Table 258: Settings list box

Item	Description
`ByPass Mode (0=Off,1=On)`	Displays if the bypass mode is active or not.
`Error Code`	Error code related to the Module.
`Module Type (0=na,1=T,2=EU,3=IU)`	Displays the Module type configured for the specific node ID: • 0=na (Unknown) • 1=T (T-Turn Module) • 2=EU (External U-Turn Module) • 3=IU (Internal U-Turn Module)

Table 259: Settings function buttons

Function button	Access level	Description
`By-Pass`	FSE	Activates (deactivates) the bypass mode.

6.11.4.3 Gates

Select `Gates` from the Module options menu.

Table 260: Gates list box

Item	Description
`Error Code`	Error code related to the Module.
`Main Lane Gate`	• `0` if open • `1` if closed
`Pit Lane Gate`	• `0` if open • `1` if closed

Table 261: Gates function buttons

Function button	Access level	Description
`Divert`	Supervisor	Performs diagnostics commands on the NSD device.
`ATR`	Supervisor	Turns on/off the ATR belt motor.
`Lock Gate`	Supervisor	Closes the selected gate.
`Unlock Gate`	Supervisor	Opens the selected gate.

6.11.4.4 Diagnostics

Select `Diagnostics` from the Module options menu.

Table 262: Diagnostics list box

Item	Description
`Error Code`	Error code related to the Module.

Table 263: Diagnostics function buttons

Function button	Access level	Description
`Disk`	Supervisor	Turns on/off the disk motor.

6.12 Internal U-Turn Module

6.12.1 Description

The Internal U-Turn Module provides a short way for carriers to reach their destination on the Automation System by diverting them to a U-shaped lane connecting a portion of track with opposite flow direction.

In this configuration, the flow of carriers is optimized: carriers go straight along the main lane and only those that need to reverse their direction enter the Module.

⚠ CAUTION

Sample tube lost or crashed.

Delayed patient results due to a tube lost or crashed due to wrong recovery steps performed by the Operator.

Contact FSE to remove possible fallen tubes.

6.12.2 Composition

The following figure shows the carrier path along the Internal U-Turn Module.

Figure 125: Internal U-Turn Module components

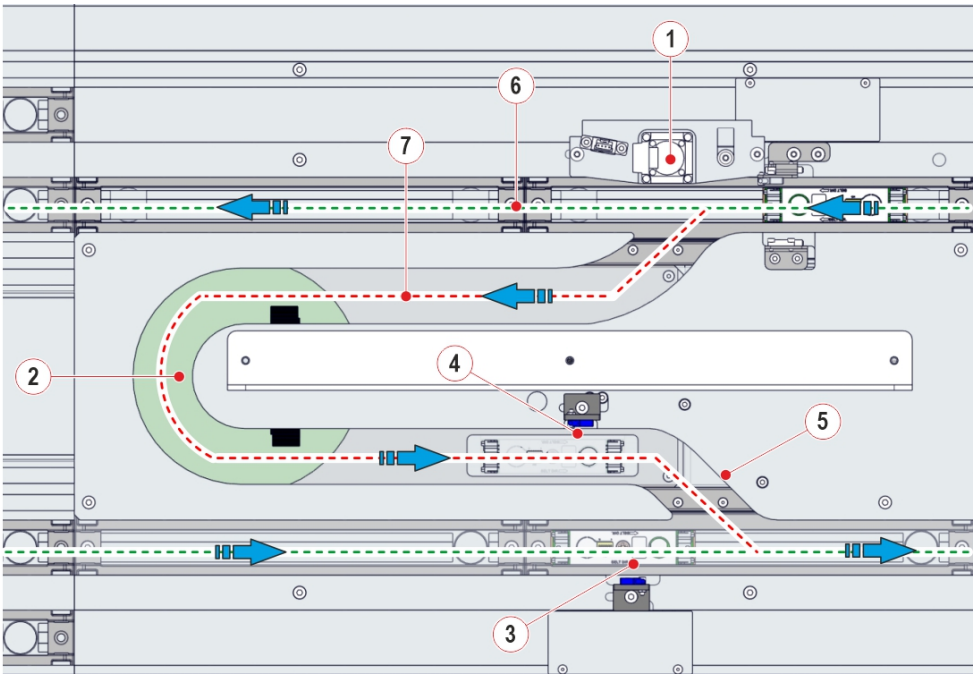

1. NSD
2. Disk
3. Main Lane Gate
4. Pit Lane Gate
5. ATR
6. Main Lane
7. Pit Lane (i.e. Secondary Lane)

6.12.3 Module functioning

The sample tube that approaches the Module is diverted to pit lane (i.e. secondary lane) if it needs to reverse its direction to reach its destination. Otherwise, the sample tube proceeds on the main on the long way.

6.12.4 Status, diagnostics and settings

To access the information about status, diagnostics and setting related to the Module, select:

1. `Overview`
2. `Track`
3. `Internal U-Turn`

NOTE
Common function buttons are also available in the following screens.

6.12.4.1 Status

Select `Status` from the Module options menu.

Table 264: Status list box

Item	Description
`Node ID`	Identifier assigned to the Module during the Automation System configuration.
`Room for Empty Carriers`	Number of empty carriers that can currently enter the Module.
`Room for Routine Samples`	Number of routine sample tubes that can currently enter the Module.
`Room for STAT Samples`	Number of priority sample tubes that can currently enter the Module.

6.12.4.2 Settings

Select `Settings` from the Module options menu.

Table 265: Settings list box

Item	Description
`ByPass Mode (0=Off,1=On)`	Displays if the bypass mode is active or not.
`Error Code`	Error code related to the Module.
`Module Type (0=na,1=T,2=EU,3=IU)`	Displays the Module type configured for the specific node ID: • 0=na (Unknown) • 1=T (T-Turn Module) • 2=EU (External U-Turn Module) • 3=IU (Internal U-Turn Module)

Table 266: Settings function buttons

Function button	Access level	Description
`By-Pass`	FSE	Activates (deactivates) the bypass mode.

6.12.4.3 Gates

Select `Gates` from the Module options menu.

Table 267: Gates list box

Item	Description
`Error Code`	Error code related to the Module.
`Main Lane Gate`	• `0` if open • `1` if closed
`Pit Lane Gate`	• `0` if open • `1` if closed

Table 268: Gates function buttons

Function button	Access level	Description
`Divert`	Supervisor	Performs diagnostics commands on the NSD device.
`ATR`	Supervisor	Turns on/off the ATR belt motor.
`Lock Gate`	Supervisor	Closes the selected gate.
`Unlock Gate`	Supervisor	Opens the selected gate.

6.12.4.4 Diagnostics

Select `Diagnostics` from the Module options menu.

Table 269: Diagnostics list box

Item	Description
`Error Code`	Error code related to the Module.

Table 270: Diagnostics function buttons

Function button	Access level	Description
`Disk`	Supervisor	Turns on/off the disk motor.
`Belt`	Supervisor	Turns on/off the belt motor.

6.13 Pass Node Module

6.13.1 Description

The Pass Node Module (PNM) operates on the main lane and detects RFID tag and tube presence of the passing carriers without stopping them and sends the appropriate notifications to the software. It also stops and resumes carriers flow according to software commands.

PNM is installed on long track sections without modules to avoid the formation of long queues of carriers, whose weight could lead to mechanical failures when leaned against a single gate.

6.13.2 Composition

Figure below shows the path of the carriers along the main lane.

Figure 126: Main lane - high throughput configuration

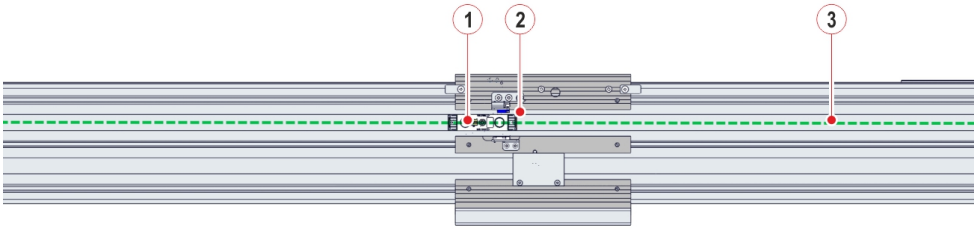

1. Antenna
2. Gate
3. Main Lane

6.13.3 Module functioning

PNM is normally open to let carriers flow along the track.

User can activate the PNM to stop the carrier flow for managing the queue on the main lane.

PNM activates in case of track pause request.

6.13.4 Status, diagnostics and settings

To access the information about status, diagnostics and settings related to the Module, select:

1. `Overview`
2. `Track`
3. `Pass Node`

NOTE
Common Function buttons are also available in the following screens.

6.13.4.1 Status

Select `Status` from the options menu.

Table 271: Status list box

Item	Description
`Node ID`	Identifier assigned to the Module during the Automation System configuration.

6.13.4.2 Gate

Select `Gate` from the options menu.

Table 272: Gates list box

Function button	Description
`Error Code`	Error code related to the Module
`Gate Antenna`	Displays carrier RF-ID and sample tube ID at the gate, if any.

Table 273: Gates function buttons

Function button	Access level	Description
`Close`	Supervisor	Allows to close the gate.
`Open`	Supervisor	Allows to open the gate.
`Pass`	Supervisor	Allows the pass of a single carrier at the gate.

6.14 Unified Track Motor Controller

6.14.1 Description

The Unified Track Motor Controller is a Module that manages the Automation Track motors.

6.14.2 Composition

The Unified Track Motor Controller Module can be configured as:

- Head Motor.
- Internal Corner Motor.
- External Corner Motor.
- T-Motor.

6.14.3 Module functioning

The Unified Track Motor Controller Module can work in four different modality (i.e. Module shape):

- Head Motor: controls the belt motor and the disk motor of the track Head.
- Internal Corner Motor (or L-internal): controls the belt motor and the internal disk motor of the L-Turn Module.
- External Corner Motor (or L-external): controls the belt motor and the external disk motor of the L-Turn Module.
- T-Motor: controls the belt motor and the two disk motors of the T-Turn Module.

Each Module is controlled by:

- FDB that manages the belt motor.
- CDB that manages the disk motor.

Each Module can have an auxiliary FDB and an auxiliary belt motor (double motorization) to prevent lab workflow interruption due to a motor or board failure.

6.14.4 Status, diagnostics and settings

To access the information about status, diagnostics and setting related to the Module, select:

1. `Overview`
2. `Track`
3. `Unified Track Motor`

NOTE
Common function buttons are also available in the following screens.

6.14.4.1 Status

Select `Status` from the Module options menu.

Table 274: Status list box

Item	Description
`Node ID`	Identifier assigned to the Module during the Automation System configuration.
`Equivalent Motor`	Node ID of the Equivalent Motor, in case of two Unified Track Motor Controllers configured one of them as Main and the other one as Auxiliary. If `0` is displayed, the Unified Track Motor is considered as main and its auxiliary motor is not present.

6.14.4.2 Settings

Select `Settings` from the Module options menu.

Table 275: Settings list box

Item	Description
`01 Motor Shape(0=Head,1=Ext.Corner,2=Int.Corner,3=T)`	• `0` if set as Head Motor. • `1` if set as External Corner Motor (or L-external). • `2` if set as Internal Corner Motor (or L-internal). • `3` if set as T-Motor.
`02 Motor Mode(0=Single,1=Main,2=Auxiliary)`	• `0` if set as Single Motor. • `1` if set as Main Motor. • `2` if set as Auxiliary Motor.
`03 Motor Status(0=Stand-by,1=Enabled)`	• `0` if the motor is in stand-by status. • `1` if the motor is enabled.
`Error Code`	Error code of the Module.

Table 276: Settings function buttons

Function button	Access level	Description
`Set Shape`	FSE	Sets the Motor Shape.
`Set Mode`	FSE	Sets the Motor Mode.

6.14.4.3 Diagnostics

Select `Diagnostics` from the Module options menu.

Table 277: Diagnostics list box

Item	Description
`Error Code`	Error code of the Module.

Table 278: Diagnostics function buttons

Function button	Access level	Description
`Motors`	Supervisor	Turns on/off all the motors controlled by the Module.
`Track Motor`	Supervisor	Turns on/off the belt motor that is driven by FDB.
`Disk`	Supervisor	Turn on/off the disk 1 motor and disk 2 motor that are driven by CDB. i Disk Motor sono quelli che movimentano i dischi che si trovano nella sottorete CAN(CDB)

6.15 Service Node

6.15.1 Description

The Service Node monitors the air supply of the Automation System.

6.15.2 Composition

The Service Node is a pneumatic plate that consists of:

- one digital pressure switch for measuring the inlet air pressure
- one system to filter the air
- one solenoid valve to control the air flow
- one digital pressure switch for measuring the outlet air pressure
- one CLB to manage the logic behavior of the pressure switches

6.15.3 Status, diagnostics and settings

To access the information about status, diagnostics and setting related to the Module, select:

1. `Overview`
2. `Track`
3. `Service Node`

NOTE
Common Function buttons are also available in the following screens.

6.15.3.1 Status

Select `Status` from the Module options menu.

Table 279: Status list box

Item	Description
`Node ID`	Identifier assigned to the Module during the Automation System configuration.
`Room for Empty Carriers`	Not applicable.
`Room for Routine Samples`	Not applicable.
`Room for STAT Samples`	Not applicable.

6.15.3.2 Diagnostics

Select `Diagnostics` from the Module options menu.

Table 280: Diagnostics list box

Item	Description
`Downstream air pressure (MPa)`	Pressure value of the outlet air (downstream air pressure).
`Error Code`	Error code related to the Module.

Table 281: Diagnostics function buttons

Function button	Access level	Description
`Air Supply`	FSE	Activates or deactivates the solenoid valve of the air supply.

7 Analyzers Connectivity

The Automation System allows the connection of different Analyzers in order to meet the needs of Laboratory in specific fields such as Clinical Chemistry, Immunology, Coagulation, Hematology and Allergology.

Interface Modules with the Analyzers enable Automation System to be connected with both Analyzer types “Point of Space” and “Pick and Place”.

The “Point of Space” Analyzers are able to sample the tubes directly from the carrier on the track, while the “Pick and Place” Analyzers need to transport the tubes from the carrier to the analyzer and vice versa.

Some examples of Interface Modules with Analyzers are shown in the following images.

Figure 127: “Point of Space” Analyzer

Figure 128: “Pick and Place” Analyzer

Refer to specific sections attached to this manual for more details on operating procedures about Analyzers when connected to the Automation System.

For information about execution of tests on samples and results management of each connected Analyzer, refer to the specific Analyzer User Manual.

This page is intentionally left blank

8 Maintenance procedures

8.1 Introduction

Proper service and maintenance of your Automation System is one of the most important aspects of a complete quality assurance program. A thorough service and maintenance program will:

- Minimize down time;
- Maintain records for inspection and accreditation, refer to 8.4 *Maintenance Tables*, page 568. Print a copy of the tables to record maintenance performed each month;

  NOTICE

  Document every completed procedure in the Maintenance Log.

- Maintain optimal Automation System operation to provide optimal performance.

Refer to the section about Analyzers/Custom Modules for the possible maintenance procedures addressed to the specific Analyzers/Custom Modules.

⚠ WARNING

All sample tubes must be removed from the area before performing maintenance procedures. Failure to comply could cause erroneous results due to contamination of samples or physical injuries due to biohazard.

⚠ WARNING

Use personal protective equipment (such as protective gloves and goggles) before performing maintenance procedures. Failure to comply could cause physical injuries.

NOTICE

Do not use the command `Pass` to remove the carriers from the pit-lane. Execute the command `Off-line With Flush` to empty the carriers out of the pit-lane.

8.2 General Care and Cleaning

Cleaning is the removal of dirt, organic matter and stains. Cleaning includes washing with water containing a soap or detergent. Dirt, and organic matter can shield microorganisms and can interfere with the killing action of decontaminants (antiseptics, chemical germicides and disinfectants).

Precleaning is essential to achieve proper disinfection. Many germicidal products claim activity only on precleaned items. Precleaning must be carried out

with care to avoid exposure to infectious agents. It is quite common to use the same chemical germicide for precleaning and disinfection.

NOTICE

Do not place containers with solution cleaning on the Automation System surface to avoid bleach, soapy water or other solutions spilling through the Automation System covers. Failure to comply with this prescription could lead to contamination of samples, possibly causing erroneous patient results.

8.3 Solution for cleaning and sanitization

8.3.1 Bleach solution

A dilute mixture of sodium hypochlorite and water may be required to perform cleaning and disinfection procedures. Depending on the action to be carried out, use the following concentrations:

- 0.1% of sodium hypochlorite in water for general cleaning procedures;
- 5% of sodium hypochlorite in water for disinfection procedures in the event of sample spilling out of the tubes or in case of tubes damage (emergency cleaning).

Use the following formula to calculate the volume of water required to mix with manufacturer-supplied sodium hypochlorite.

X = (B – A)/A

Legend:

A =	% of sodium hypochlorite solution desired.
B =	% of sodium hypochlorite (active or available chlorine) in manufacturer-supplied solution.
X =	Number of parts of water required to mix with one part of manufacturer-supplied sodium hypochlorite (active or available chlorine) solution.

⚠ WARNING

Don't mix bleach with ammonia, acids, or other cleaners.
Mixing bleach with common cleaning products can cause serious injuries. Be sure to always read the product label before using a cleaning product.

NOTE

Stability of the working solution is 30 days after preparation.

8.3.2 Alcohols

Isopropyl alcohol (also called isopropanol) has disinfectant properties. For highest effectiveness it should be used at concentrations of approximately 70% (v/v) in water.

⚠ WARNING

Alcohols are volatile and flammable and must not be used near open flames.
Working solutions should be stored in proper containers to avoid the evaporation of alcohols. Proper inventory and storage of ethanol in the laboratory is very important to avoid its use for purposes other than disinfection.

⚠ CAUTION

Do not use isopropanol to clean polycarbonate covers and plastic materials.

NOTE

Isopropyl alcohol can be used both for general cleaning procedures and disinfection (emergency cleaning).

8.3.3 Cover cleaning

To clean polycarbonate covers use a lint-free cloth and a product that does not contain isopropanol. The recommended products are the following:

Products	Manufacturer
• Intensive Plastic Cleaner (Kunststoff-Intensiv-Reiniger) • Anti-Static Plastic Cleaner and Polish (Antistatischer Kunststoff-Reiniger+Pfleger)	Burnus GmbH (www.burnus.de)
• Universal Cleaner MS 260 (Universalreiniger MS 260)	ECS AG (www.ecsag.ch)
• Lastoclear	Eco-Point International B.V. (www.eco-point.com)

8.4 Maintenance Tables

A thorough service and maintenance program will maintain records for inspection and accreditation. Print a copy of the tables to record maintenance performed each month.

8.4.1 Maintenance Table: Daily

Month _____

Year _____

Serial N. _____

Module	Operations Description	Time re-quired (min)	Day																															
			1	2	3	4	5	6	7	8	9	10	11	12	13	14	15	16	17	18	19	20	21	22	23	24	25	26	27	28	29	30	31
Input/Output Module	Inspect racks	2																															
Rack Input Module	Inspect racks	2																															
Centrifuge Module	Inspect bucket inserts	2																															

8.4.2 Maintenance Table: Weekly

Month _____

Year _____

Serial N. _____

Module	Operations description	Time re-quired (min)	Week				
			1	2	3	4	5
Input/Output Module	Clean the worktable	10					
Input/Output Module	Clean the display bar	2					
Input/Output Module	Clean robot gripper	10					
Input/Output Module	Clean racks	20					
Rack Input Module	Clean the worktable	5					
Rack Input Module	Clean the robot gripper	10					
Rack Input Module	Clean racks	20					
Bulk Input Module	Clean the worktable	5					
Centrifuge Module	Clean bucket inserts	30					
Storage and Retrieval Module	Empty the condensation liquid tank	2					

8.4.3 Maintenance Table: Monthly

Month _____

Year _____

Serial N. _____

Module	Operations Description	Time re-quired (min)	Date
Decapper Module	Clean Gripper Pads, Drip Tray and Cap Grip	5	
Decapper Module	Clean the interchangeable pipe	5	
Sealer Module	Clean Gripper Pads	5	
Desealer Module	Clean Gripper Pads and Drip Tray	5	
Desealer Module	Clean the interchangeable pipe	5	

8.5 Preventive maintenance

8.5.1 Input/Output Module

8.5.1.1 Clean the worktable

The following procedure describes how to clean the worktable

8.5.1.1.1 Prerequisites

Authorized personnel:	Supervisor
Conditions:	Module Off-line
Tools and materials:	• Lint-free cloth • 0.1% sodium hypochlorite solution
Procedures:	None

8.5.1.1.2 Task steps

⚠ WARNING

Potential Biohazard.

Biohazardous material could be present on the surfaces.

Take appropriate precautions and follow laboratory standard operating procedures and guidelines when performing this procedure.

1. Set the Module to Off-line:
   a. Click on `Overview` and select `Input/Output`
   b. Click on `Status` menu.
   c. Select `Off-line` function button and select the option `Flush Carriers`.
   d. Wait until the Module is set to Off-line.

   ⚠ WARNING

   Pinch Hazard.

   Ensure the robot has stopped all movement before proceeding to the next step.

2. Extract all racks from the lanes. Refer to the procedure 5.2.6 *How to extract racks from the lanes of the Input/Output Module*, page 371. Ensure that all the lanes are completely free.

⚠ WARNING

Potential Biohazard.

Uncapped sample tubes are biohazardous.

When handling uncapped sample tubes, avoid splashing sample outside the sample tubes.

⚠ WARNING

Potential Biohazard.

Sample tubes are potentially biohazardous.

Follow laboratory standard procedures and guidelines when handling tubes.

⚠ WARNING

Pinch Hazard.

Do not reach the area under the display bar. You could be injured if your hand enters the robot area.

Always use the rack handles to insert or remove a rack.

3. If present, move the Panel PC aside to allow the cover opening.
4. Lift up the safety cover by the handle.

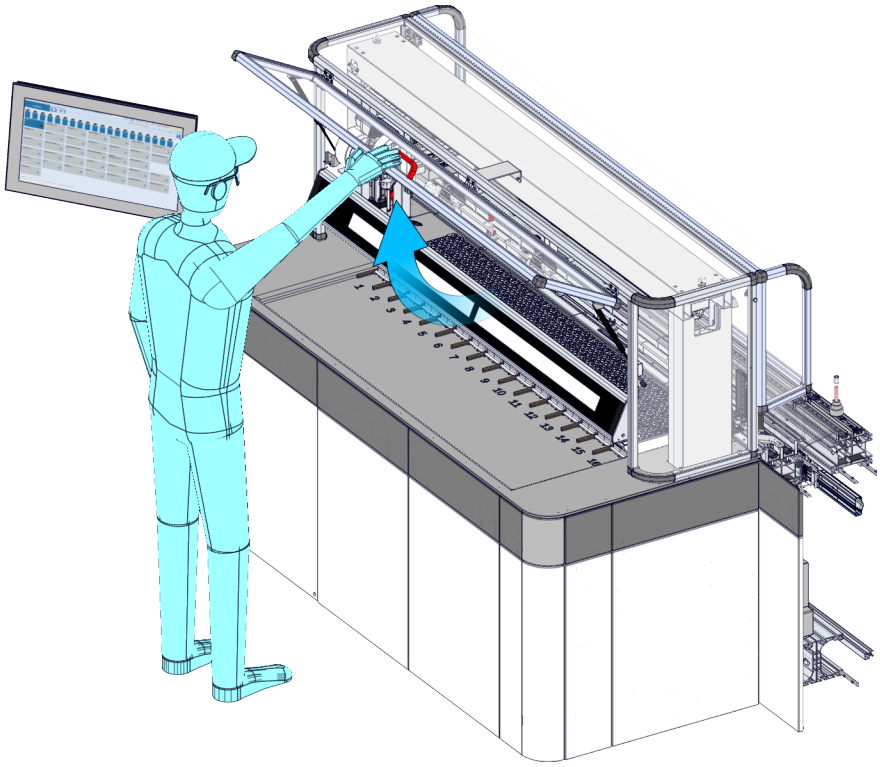

5. Grasp the robot and manually slide it on the side of the Module to allow easy access to the area.