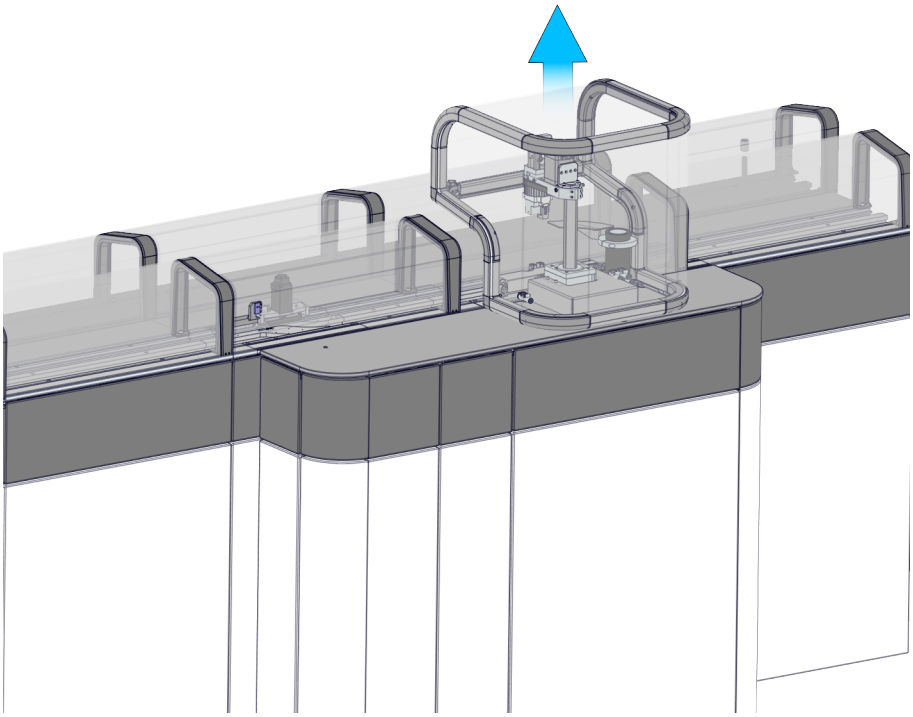

3. Pull up the Decapper head and rotate it to the decap position by hand.

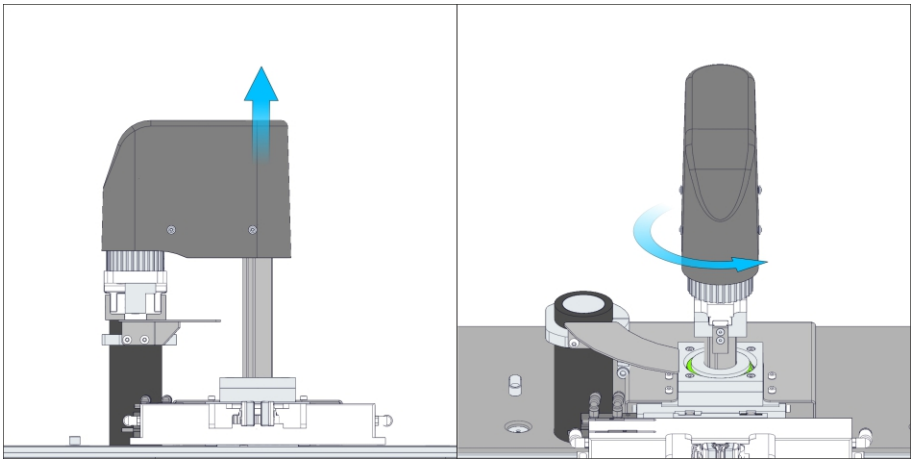

4. Using a lint-free cloth lightly moistened with 0.1% sodium hypochlorite solution, clean the Drip Tray (Figure 143 – A), the Gripper Pads (Figure 143 – B) and the Cap Grip (Figure 143 – C).

Figure 143:

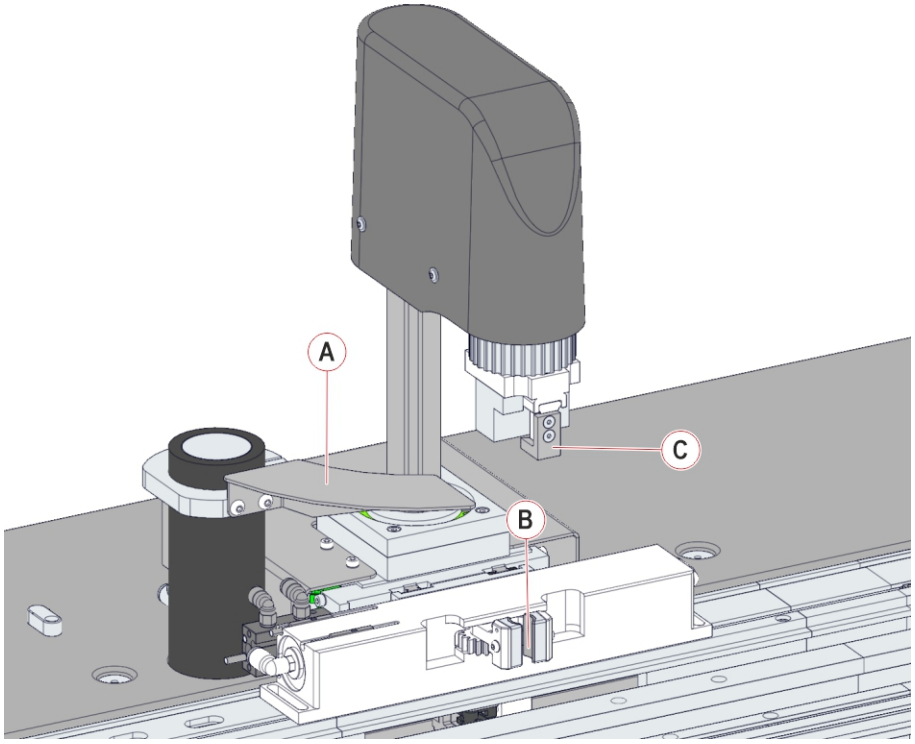

5. Inspect the gripper pads to ensure they are not excessively worn. If the gripper pads are excessively worn, contact the Service Assistance.
6. Make sure that you move the Decapper head away from the drip tray, in order to avoid any impact during initialization.

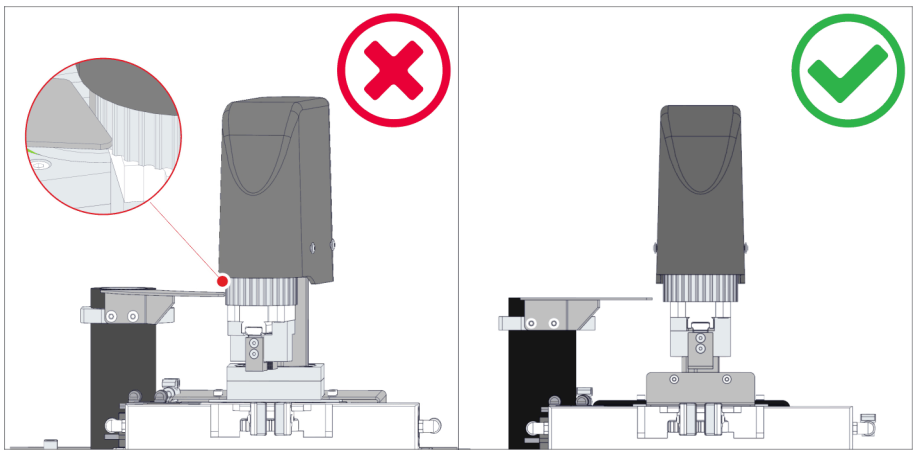

7. Install the Decapper Module cover.
8. Set the Decapper Module to On-line status:
   a. Select `Overview` button.
   b. Select `Decapper` button.
   c. Select `Status`.
   d. Select `On-line` function button and confirm.

8.5.5.1.3 Verification steps

Verify that the Decapper Module is back online.

8.5.5.2 Clean the interchangeable pipe

The following procedure describes how to clean the interchangeable pipe.

8.5.5.2.1 Prerequisites

Authorized personnel:	Operator
Conditions:	Module Off-line
Tools and materials:	• Lint-free cloth • 0.1% sodium hypochlorite solution
Procedures:	None

NOTICE

All sample tubes must be removed from the area before performing the following procedures. Failure to comply could cause erroneous results due to contamination of samples or physical injuries due to biohazard.

8.5.5.2.2 Task steps

1. Set the Module Off-line:
   a. Click on `Overview` and select `Decapper`
   b. Click on `Status` menu.
   c. Select `Off-line` entry in the pop-up, select `Flush Carriers` entry and confirm. The carriers are flushed out of the buffer lane, then the Module changes to Off-line.
2. Remove the Decapper Module cover.

⚠ WARNING

Potential Biohazard.

Biohazardous material may be present on the surfaces. Take appropriate precautions when performing this procedure. Follow laboratory standard operating procedures and guidelines when performing this procedure.

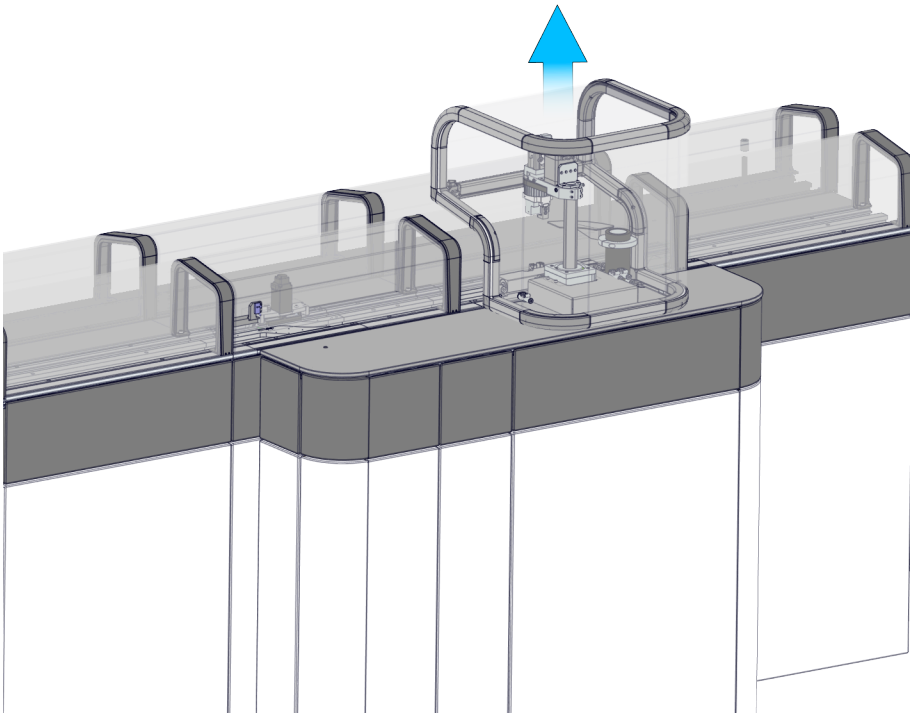

3. Pull up the Decapper head and rotate it to the decap position by hand.

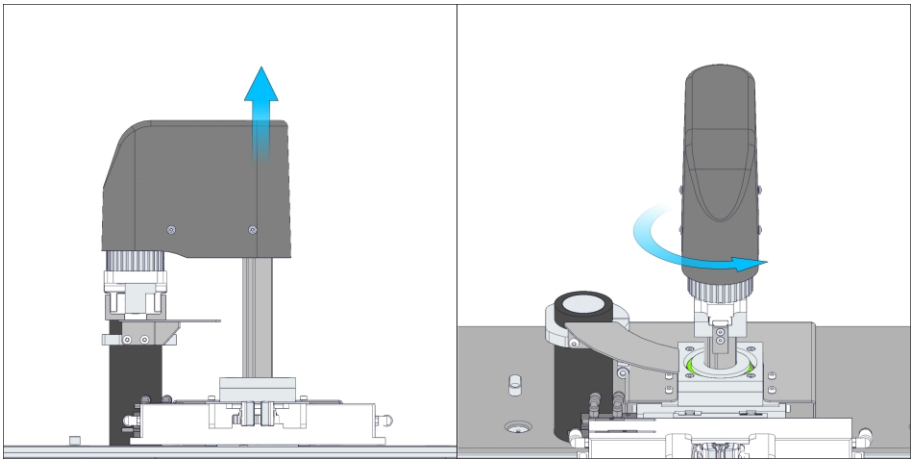

4. Extrude the interchangeable pipe from the internal chute.

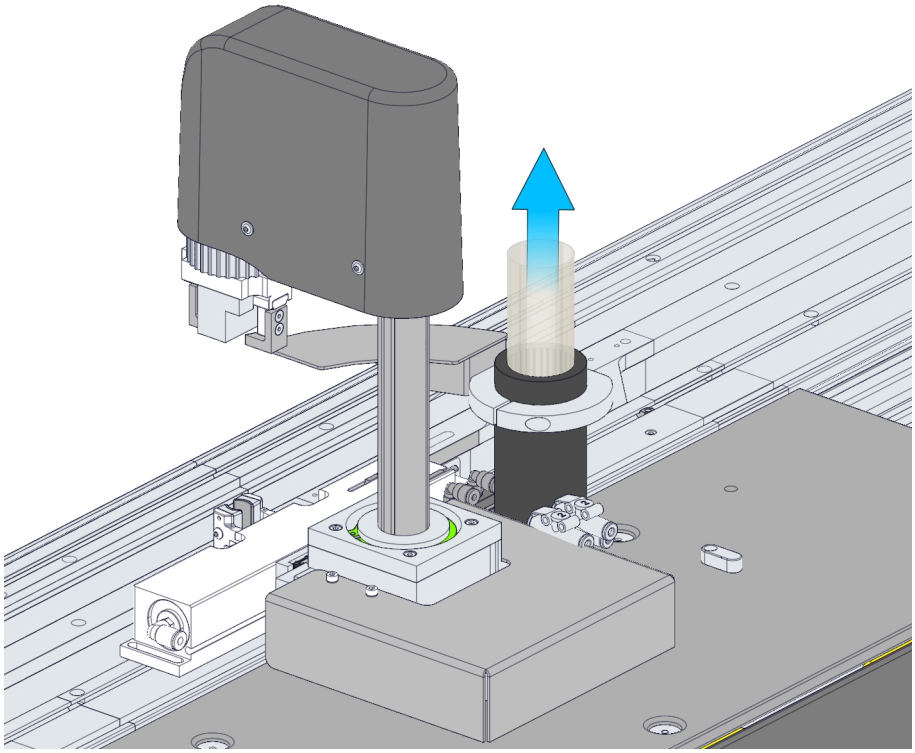

⚠ WARNING

Potential Biohazard.

Biohazardous material may be present on the interchangeable pipe. Take appropriate precautions when performing this procedure. Follow laboratory standard operating procedures and guidelines when performing this procedure.

5. Clean carefully the interchangeable pipe with 0.1% sodium hypochlorite solution, making attention to not scratch it.

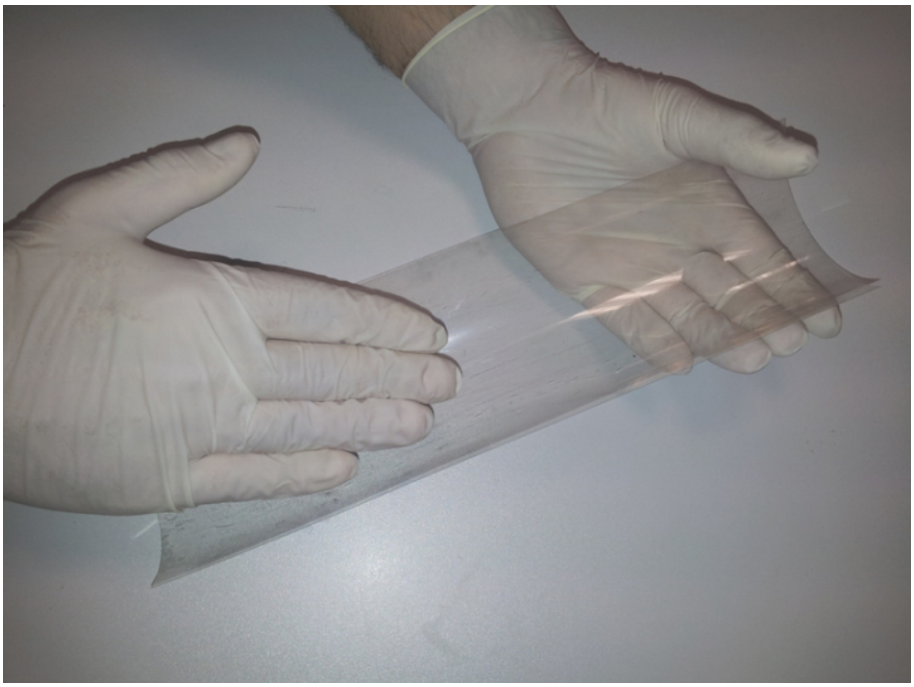

6. Using a lint-free cloth, wipe the interchangeable pipe.
7. Roll the interchangeable pipe again and insert it into the chute. Slide it all along the chute length.

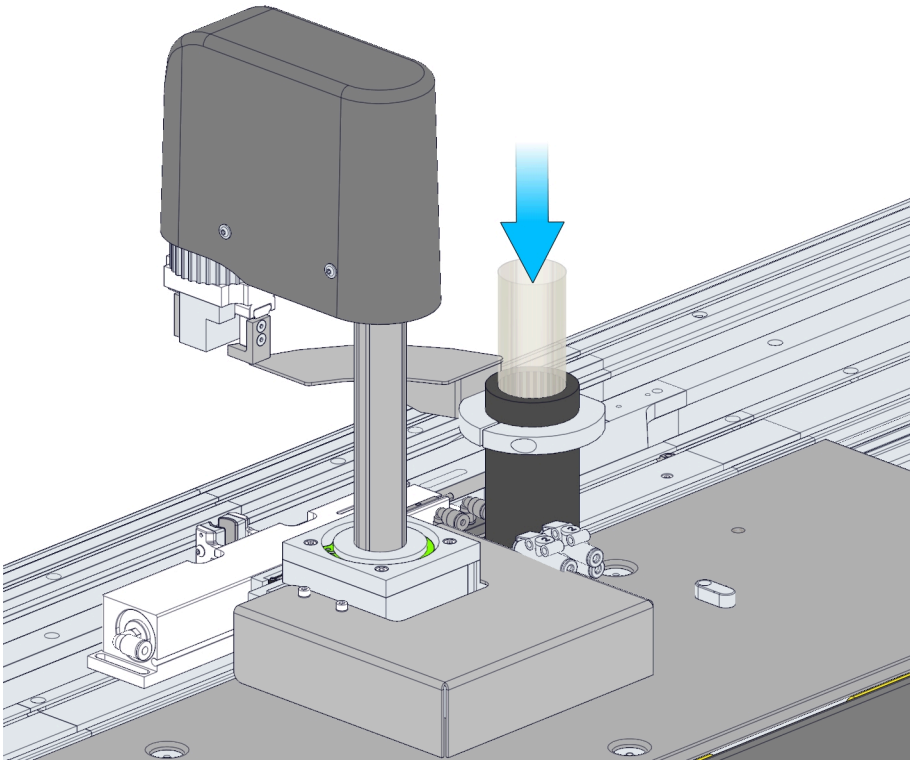

8. Put manually the head of the Decapper back in place.
9. Make sure that you move the Decapper head away from the drip tray, in order to avoid any impact during initialization.

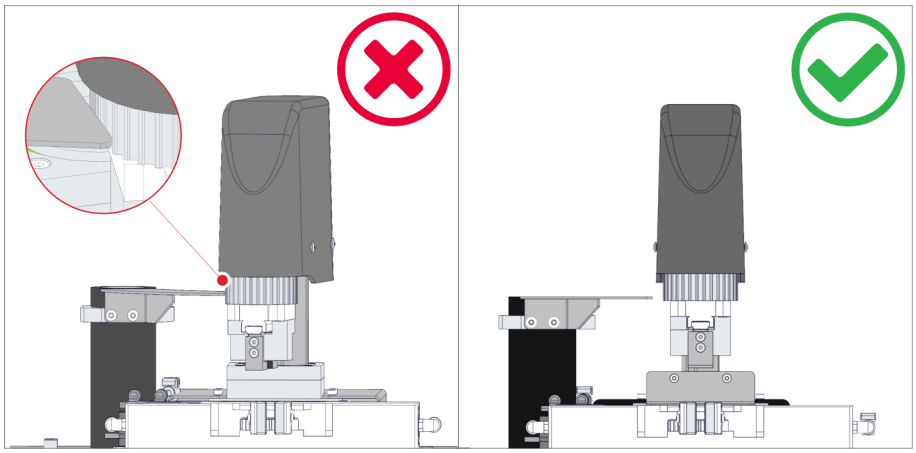

10. Install the Decapper Module cover.
11. Set the Decapper Module in On-line status:
    a. Click on `Overview` and select `Decapper`
    b. Click on `Status` menu.
    c. Select `On-line` function button..
    d. Wait until the Module is set to On-line.

8.5.5.2.3 Verification steps

Verify that the Decapper Module is back online.

8.5.6 Sealer Module

8.5.6.1 Clean gripper pads

The following procedure describes how to clean the gripper pads.

8.5.6.1.1 Prerequisites

Authorized personnel:	Supervisor
Conditions:	Module off-line
Tools and materials:	• Lint-free cloth • 0.1% sodium hypochlorite solution
Procedures:	None.

8.5.6.1.2 Task steps

⚠ WARNING

Potential Biohazard.

Only trained Users should perform the following maintenance procedures. Follow your laboratory standard operating procedures and guidelines for biohazardous materials handling

NOTICE

All sample tubes must be removed from the area before performing the following procedures. Failure to comply could cause erroneous results due to contamination of samples or physical injuries due to biohazard.

⚠ WARNING

Pinch Hazard.

Ensure the Sealer Module robot has stopped all movements before proceeding to the next step.

1. Set the Sealer Module off-line and switch off the Sealer heater:
   a. Select `Sealer` button in `Overview` screen.
   b. Select `Off-line` entry in the pop-up, select `Flush Carriers` entry and confirm. The carriers are flushed out of the buffer lane, then the Module changes to Off-line.
   c. Select `Diagnostics – Sealing Head` entry in the pop-up.
   d. Select `Heater` function button and then the `Off` entry.
2. Check the heater temperature. Wait until the value corresponding to the Sealer - Heater Analog sensor is 55°C/131°F or less before continuing this procedure. It will take approximately 30 minutes for the value to reach 55°C/131°F.

⚠ WARNING

Hot Surface.

High temperature (> 65°C/149°F) could be present in the Sealer area at the heater. Ensure the Sealer heater is switched off and verify the value corresponding to the Sealer - Heater Analog Sensor is less than 55°C/131°F before performing this procedure.

3. Open the Sealer Module cover.

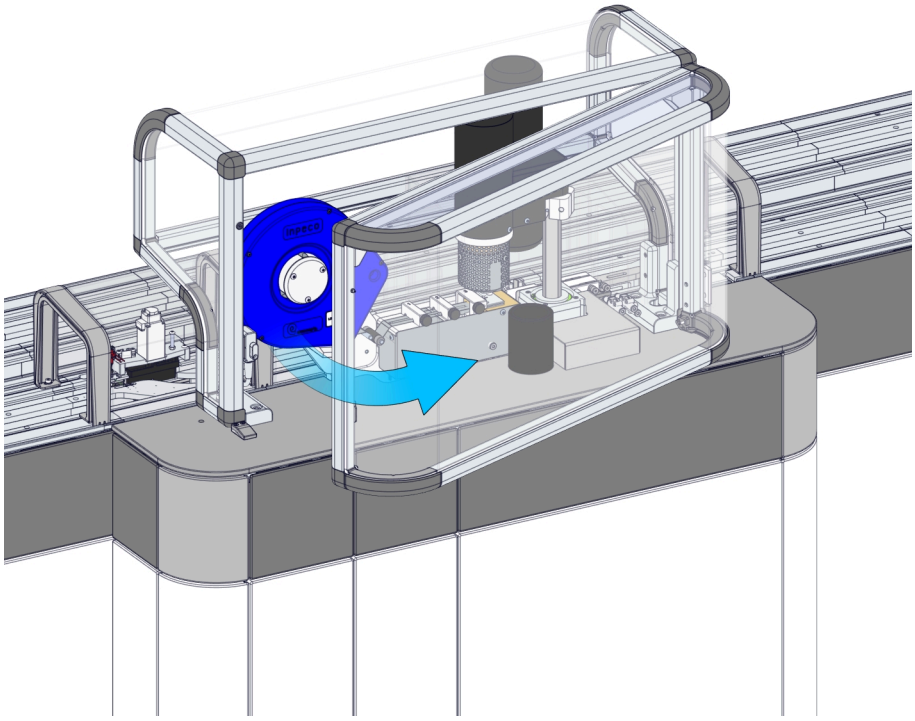

⚠ WARNING

Potential Biohazard.

Biohazardous material may be present on the Tube Gripper surfaces. Take appropriate precautions when performing this procedure. Follow laboratory standard operating procedures and guidelines when performing this procedure.

4. Clean the gripper pads with a lint-free cloth lightly moistened with 0.1% sodium hypochlorite solution.
5. Inspect the gripper pads to ensure they are secure and not excessively worn. If the gripper pads are positioned incorrectly or excessively worn, contact the Service Assistance.
6. Close the Sealer Module cover.
7. Set the Sealer Module to On-line status:
   a. Select `Overview` button.
   b. Select `Sealer` button.
   c. Select `Status` entry in the pop-up.

d. Select `On-line` function button and confirm.

8.5.6.1.3 Verification steps

Verify that the Module is back online.

8.5.7 Desealer Module

8.5.7.1 Clean Gripper Pads and Drip Tray

The following procedure describes how to clean the gripper pads and drip tray.

8.5.7.1.1 Prerequisites

Authorized personnel:	Operator
Conditions:	Module off-line
Tools and materials:	• Lint-free cloth • 0.1% sodium hypochlorite solution
Procedures:	None

NOTICE

All sample tubes must be removed from the area before performing the following procedures. Failure to comply could cause erroneous results due to contamination of samples or physical injuries due to biohazard.

8.5.7.1.2 Task steps

1. Set the Module Off-line:
   a. Click on `Overview` and select `Desealer`
   b. Click on `Status` menu.
   c. Select `Off-line` entry in the pop-up, select `Flush Carriers` entry and confirm. The carriers are flushed out of the buffer lane, then the Module changes to Off-line.
2. Remove the Desealer Module cover.

⚠ WARNING

Potential Biohazard.

Biohazardous material may be present on the surfaces. Take appropriate precautions when performing this procedure. Follow laboratory standard operating procedures and guidelines when performing this procedure.

⚠ CAUTION

Lacerations, Punctures.

Entanglement due to User access to mechanical moving parts. Use caution when accessing parts of the module normally protected by safety shields.

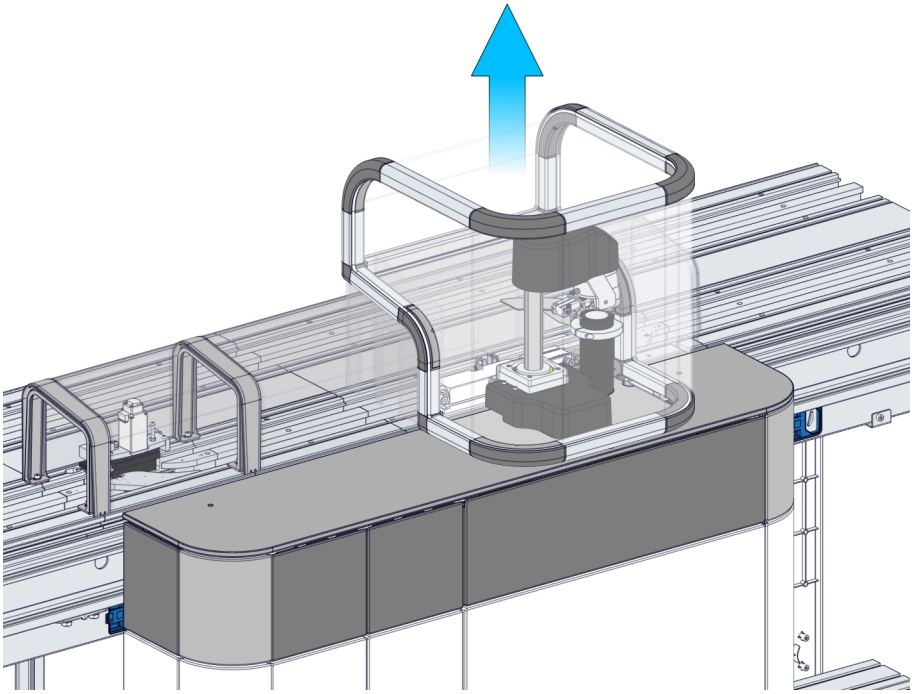

3. Pull up the Desealer head and rotate it to the deseal position by hand.

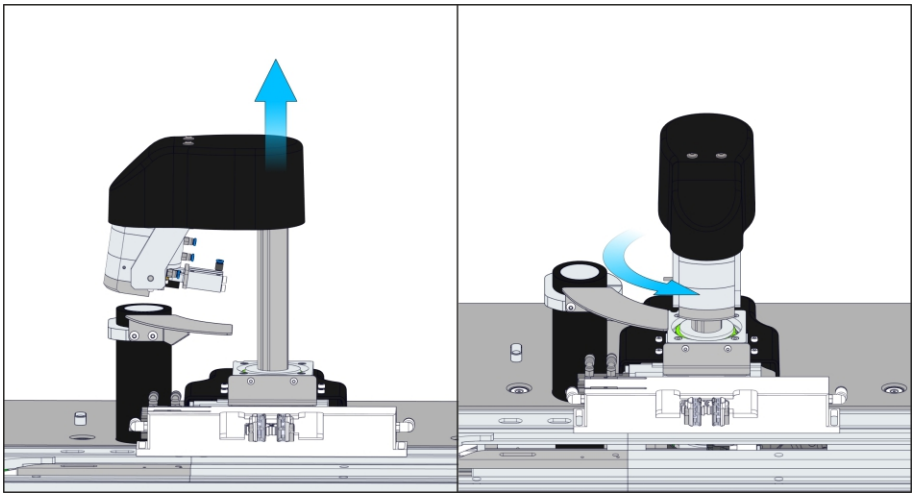

4. Using a lint-free cloth lightly moistened with 0.1% sodium hypochlorite solution, clean the Drip Tray (Figure 144 – A), the Gripper Pads (Figure 144 – B).

Figure 144:

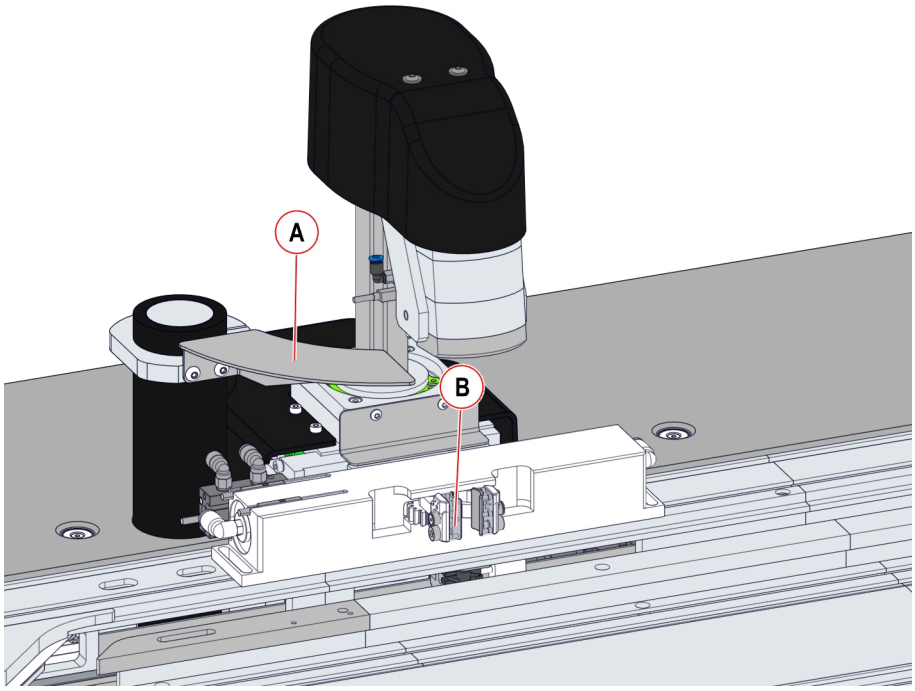

5. Install the Desealer Module cover.
6. Set the Desealer Module in On-line status:
   a. Click on `Overview` and select `Desealer`
   b. Click on `Status` menu.
   c. Select `On-line` function button..
   d. Wait until the Module is set to On-line.

8.5.7.1.3 Verification steps

Verify that the Desealer Module is back online.

8.5.7.2 Clean the interchangeable pipe

The following procedure describes how to clean the interchangeable pipe.

8.5.7.2.1 Prerequisites

Authorized personnel:	Operator
Conditions:	Module Off-line
Tools and materials:	• Lint-free cloth • 0.1% sodium hypochlorite solution
Procedures:	None

NOTICE

All sample tubes must be removed from the area before performing the following procedures. Failure to comply could cause erroneous results due to contamination of samples or physical injuries due to biohazard.

8.5.7.2.2 Task steps

1. Set the Module Off-line:
   a. Click on `Overview` and select `Desealer`
   b. Click on `Status` menu.
   c. Select `Off-line` entry in the pop-up, select `Flush Carriers` entry and confirm. The carriers are flushed out of the buffer lane, then the Module changes to Off-line.
2. Remove the Desealer Module cover.

⚠ WARNING

Potential Biohazard.

Biohazardous material may be present on the surfaces. Take appropriate precautions when performing this procedure. Follow laboratory standard operating procedures and guidelines when performing this procedure.

⚠ CAUTION

Lacerations, Punctures.

Entanglement due to User access to mechanical moving parts. Use caution when accessing parts of the module normally protected by safety shields.

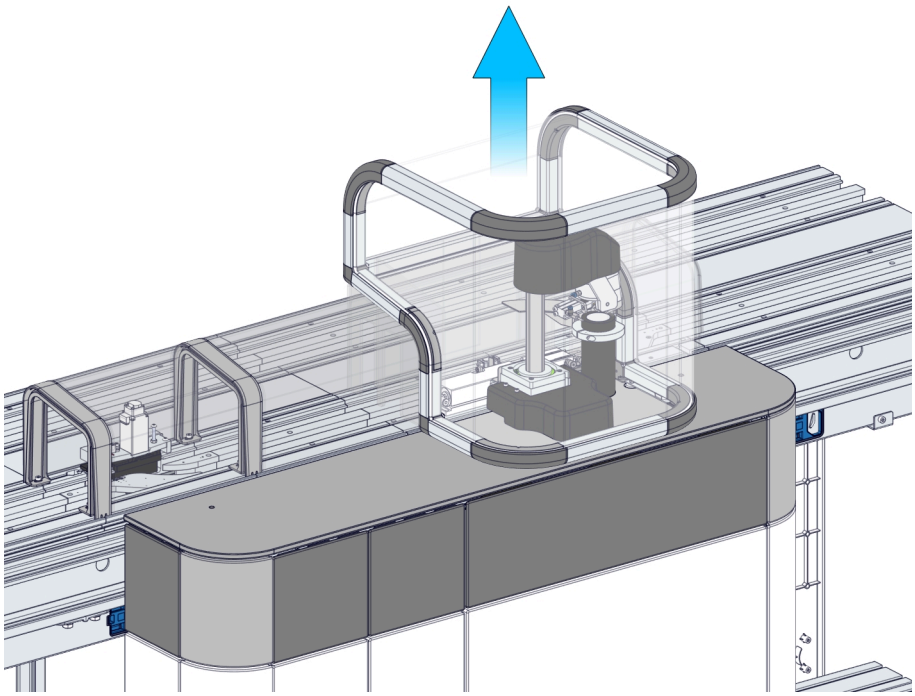

3. Pull up the Desealer head and rotate it to the deseal position by hand.

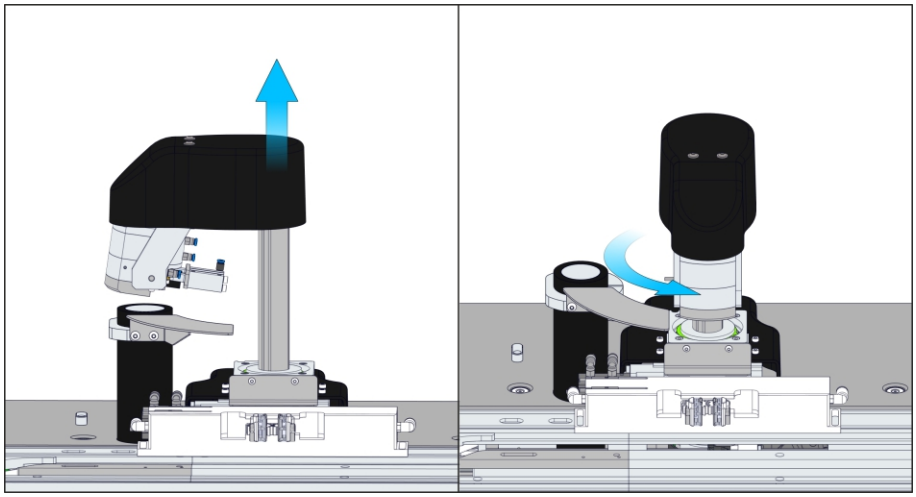

4. Extrude the interchangeable pipe from the internal chute.

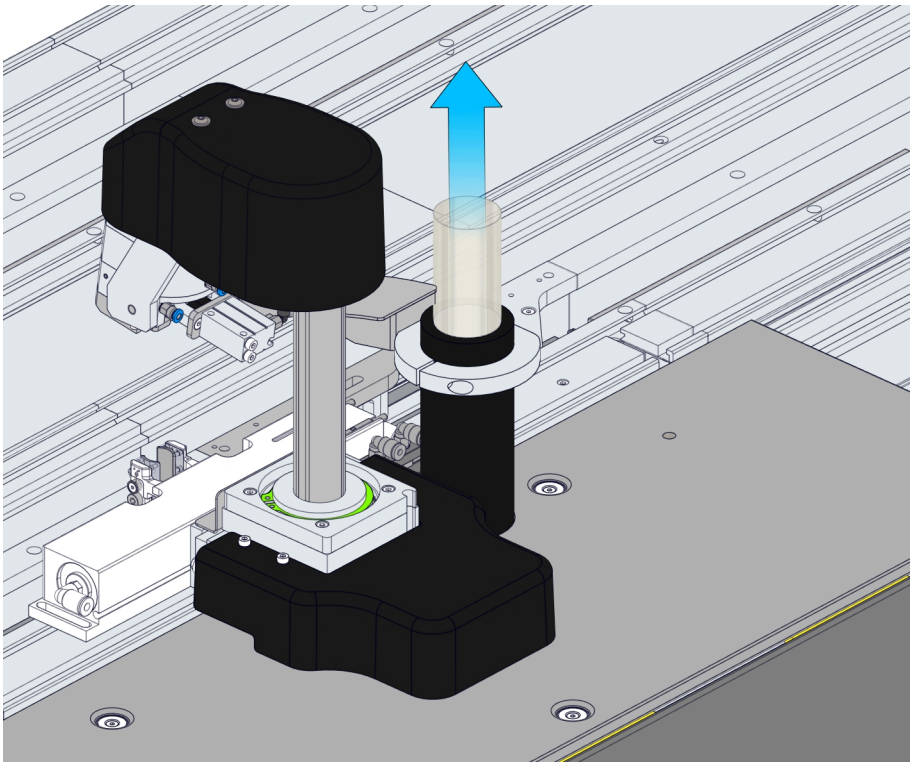

⚠ WARNING

Potential Biohazard.

Biohazardous material may be present on the interchangeable pipe. Take appropriate precautions when performing this procedure. Follow laboratory standard operating procedures and guidelines when performing this procedure.

5. Clean carefully the interchangeable pipe with 0.1% sodium hypochlorite solution, making attention to not scratch it.