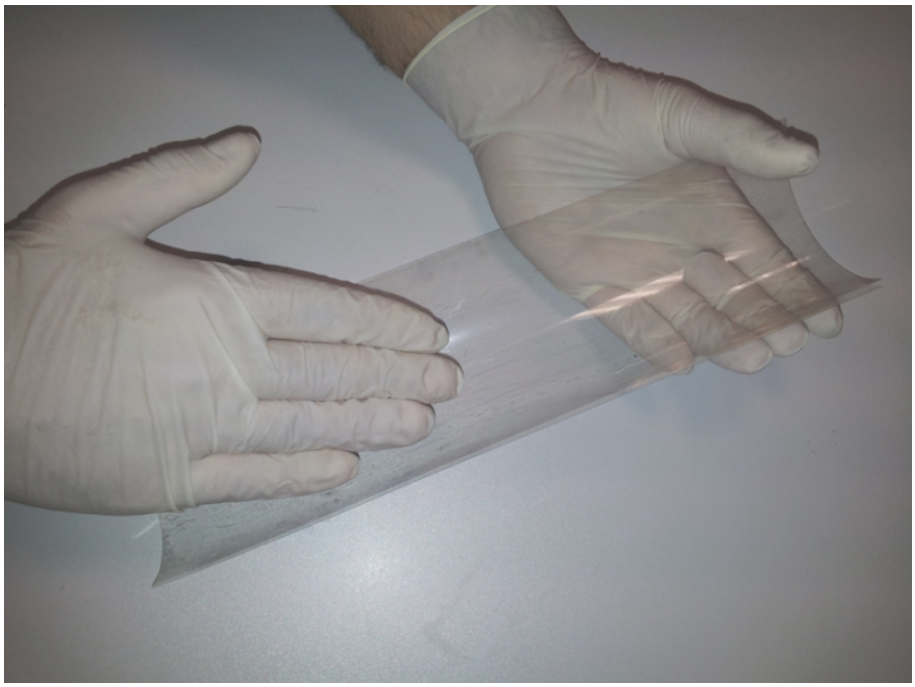

6. Using a lint-free cloth, wipe the interchangeable pipe.
7. Roll the interchangeable pipe again and insert it into the chute. Slide it all along the chute length.

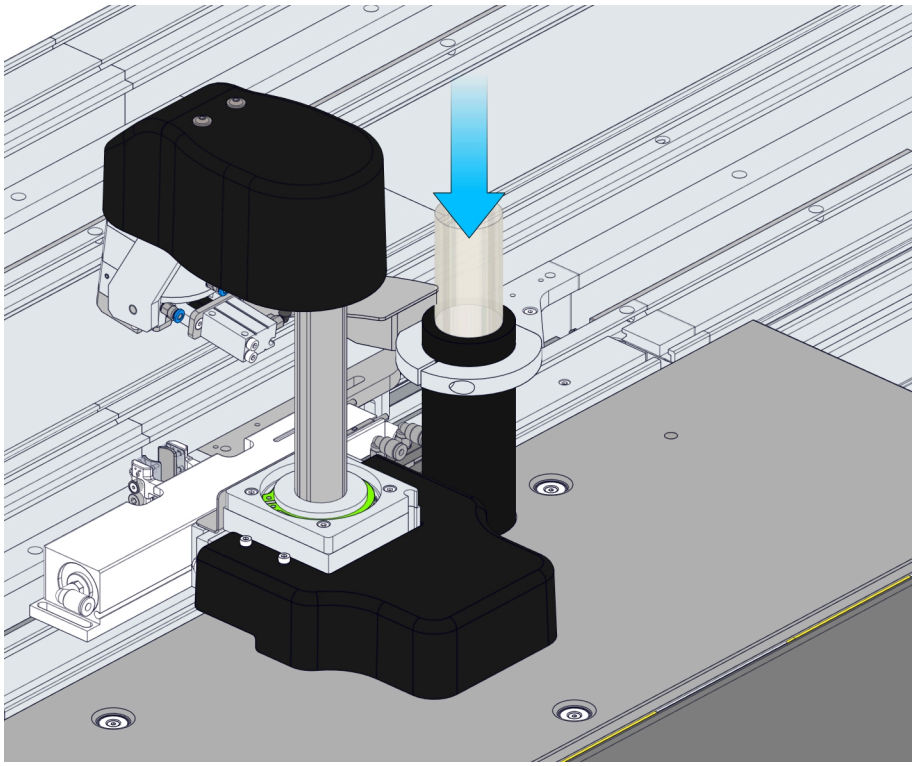

8. Put manually the head of the Desealer back in place.
9. Install the Desealer Module cover.
10. Set the Desealer Module in On-line status:
    a. Click on `Overview` and select `Desealer`

b. Click on `Status` menu.
c. Select `On-line` function button..
d. Wait until the Module is set to On-line.

8.5.7.2.3 Verification steps

Verify that the Desealer Module is back online.

8.5.8 Storage and Retrieval Module

8.5.8.1 Empty the condensation liquid tank

At the discretion of Laboratory, the condensation liquid of the refrigerator unit can be either collected in a tank or drained in a waste tube of the Laboratory.

The following procedure describes how to empty the condensation liquid tank of the refrigerator unit when full.

8.5.8.1.1 Prerequisites

Authorized personnel:	Operator
Conditions:	None
Tools and materials:	Condensation liquid tank (provided by the Laboratory)
Procedures:	None

8.5.8.1.2 Task steps

1. Locate the condensate drain pipe (Figure 145 – A) of the refrigerator unit and the condensation liquid tank.

   Figure 145:

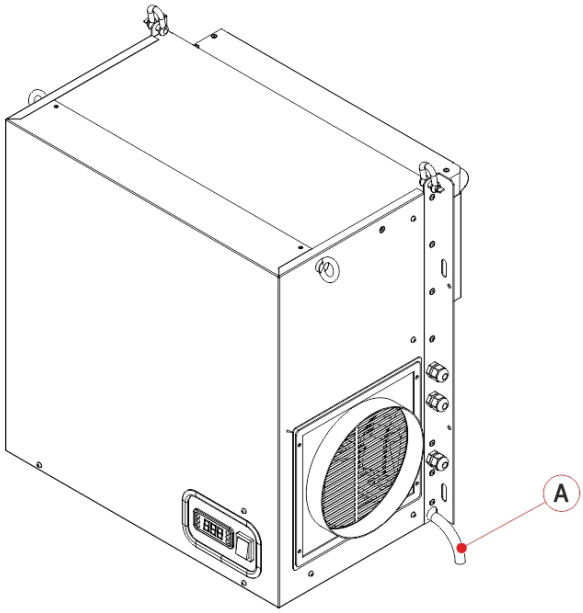

2. Empty the condensation liquid tank when full in accordance with the Good Laboratory Practices.

8.5.8.1.3 Verification steps

None.

9 Consumables

Some of Automation Modules need of consumables for routine process. The list of consumables that can be supplied is shown below.

Table 282: Consumables

Module	Description	Image	Notes
Sealer Module	Sealer coil. Contents: 18000 seals		None.

Refer to the section about Analyzers/Custom Modules for the possible list of consumables addressed to the specific Analyzers/Custom Modules.

This page is intentionally left blank

10 References

10.1 Access levels

Automation Software provides 4 profiles for User access, with levels increasing from 1 to 4.

Table 283: Profiles for User access

Level	Profile	Access Level	User Type	Validation Level
1	Laboratory Technician	Operator	Clinical	V1
2	Laboratory Supervisor	Supervisor		V2
3	Physician	Supervisor	Clinical	V3
4	Head Physician			V4

Every Laboratory User is assigned a Username and a personal (non-transferable) password. Furthermore, every User is configured according to one of the levels listed, in order to log in only to the functions corresponding to their level. New users can be added by the Head Physician, or contacting the technical support.

In addition, Automation System provides other 2 profiles for User access.

Table 284: Other User levels

Level	Profile	Access Level	User Type	Validation Level
n/a	Guest	Guest	Viewer	n/a
n/a	FSE	FSE	Technical support	n/a

inpeco.com