NT-T710 Manual

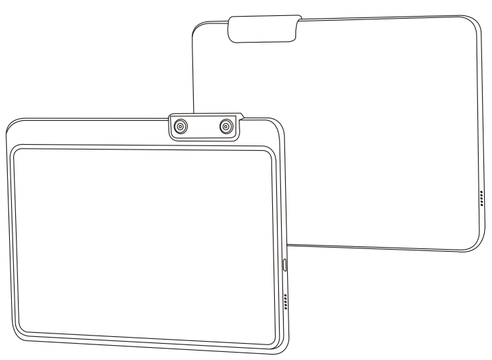

01/ Statements

⌘ First of all, thank you for using our digital products

⌘ Reproduction, transmission, distribution and storage of the contents of the Company's manuals in any form without the prior written permission of the Company is strictly prohibited.

⌘ While every effort has been made to ensure that the contents of this manual are correct and complete, we cannot guarantee that there are no errors or omissions in this manual.

⌘ Following a strategy of continuous development, we reserve the right to make changes and improvements to any of the products described in this brochure without prior notice.

⌘ In no event shall we be liable for any loss of data or revenue, or any special, incidental, consequential or indirect damages,however caused.

⌘ Forgive us for not informing you , if the design and specifications of this machine and accessories are subject to change.

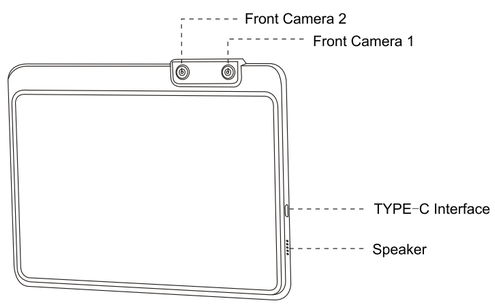

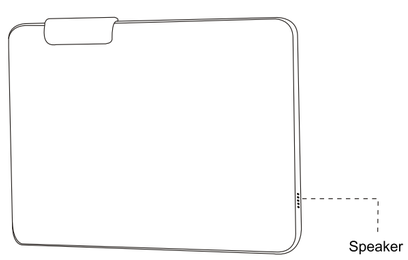

02/ Appearance Introduction

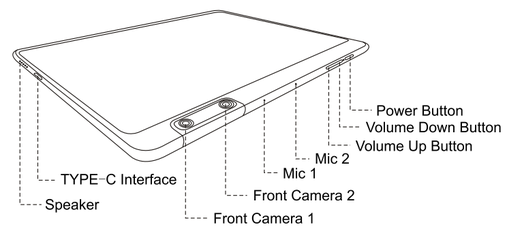

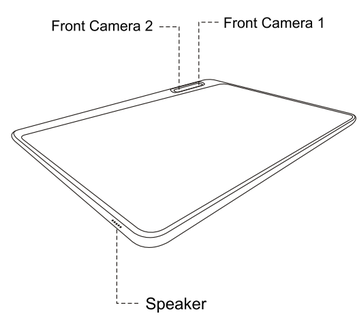

03/ Basic Operation

⌘ **Power On**

In the power off state, long press the power button, the system enters the boot screen

⌘ **Power off**

In the power-on state, long press the power button to start the shutdown process

⌘ **Main Interface Introduction**

a.Status bar:Enter the specific function menu,the topmost column of the interface is the status bar, displaying information: time, battery level, Bluetooth, WIFI.

b.Function Icons: In the main interface, directly click on the icons to access various functions or make relevant settings for the machine.

⌘ **Connect to WLAN Network**

a.Swipe down on the status bar to open the notification panel or find “WLAN” in “Settings”

b.Turn on the WLAN switch and the system will list the detected WLAN network signals in a list.

c.Click on the WLAN network you want to connect to. If an encrypted network is selected, enter the password to connect.

⌘ **Connect to Bluetooth**

a.Swipe down on the status bar to open the notification panel or find “Bluetooth”in “Settings”.

b.Turn on the “Bluetooth”switch, enter the Bluetooth setting interface, search for the Bluetooth address.

c. Click on the name of the Bluetooth address you want to connect to, and implement the pairing connection.

⌘ **Charging operation and battery management**

a.Charging can be done by connecting the USB charging port of the unit to a computer, mobile power supply or other charging device via a USB cable.

b.Batteries need to go through several charging and discharging processes to achieve optimal performance;

c.If you do not use the machine for a long time, please charge and discharge it at least once in a month to prevent malfunctions such as the battery not being able to charge and turn on due to complete depletion.

（If you purchase another adapter, please follow the requirements of the following purchase, otherwise there are accidents or failures of our company as man-made damage. The specifications of the selected power adapter must meet the following requirements: Input: AC100-240V, 50/60HZ, 0.6A Output: DC9V=2000mA)

04/ Product Specification Parameters

Appearance Size: 241. 3mm*173. 5mm*9. 6mm
Product Shell: Full Plastic
Screen Size: 10. 1 inch
Screen Resolution: 1200*1920 FHD
Battery Type: lithium-ion polymer Battery
Battery Capacity: 3. 8V/9000mAh
RAM: 8GB
ROM: 128GB
Camera: Front Camera 1 13MP Front Camera 2 13MP
WIFI Module: Dual Band（2. 4G and 5G）
Bluetooth Module: BT 5. 0
Headphone Interface: TYPE-C
Operation System: Android 13

05/ Product Certification

Product Certification

06/ Precaution

⌘ Do not allow the product to rub against hard objects.

⌘ Do not expose to chemicals such as benzene, thinner.

⌘ Keep away from strong magnetic and electric fields

⌘ Keep away from direct light and heat generating appliances.

⌘ Do not expose the battery to temperatures up to 60℃ or to sources of ignition.

⌘ Do not disassemble, repair, or modify.

⌘ Do not use the player and headphones while riding a bicycle or driving a car, as this may cause danger.

⌘ Do not listen to loud music as it may adversely affect your hearing.

⌘ Dispose of waste packaging, batteries, and old electronic products in a proper manner.

⌘ If the battery has not been used for a long time or the battery is depleted, it may not be able to be turned on immediately when it is recharged, so please keep charging it for a period of time before turning it on and using it.

⌘ Consumers who use power adapters for power supply should purchase and use power adapters that meet the standard requirements.

120mm X 180mm

FCC Caution:

Any changes or modifications not expressly approved by the party responsible for compliance could void the user's authority to operate this equipment.

This device complies with part 15 of the FCC Rules. Operation is subject to the following two conditions:
(1) this device may not cause harmful interference, and
(2) this device must accept any interference received, including interference that may cause undesired operation.
This device and its antenna(s) must not be co-located or operating in conjunction with any other antenna or transmitter.

NOTE: This equipment has been tested and found to comply with the limits for a Class B digital device, pursuant to Part 15 of the FCC Rules. These limits are designed to provide reasonable protection against harmful interference in a residential installation. This equipment generates, uses and can radiate radio frequency energy and, if not installed and used in accordance with the instructions, may cause harmful interference to radio communications. However, there is no guarantee that interference will not occur in a particular installation.
If this equipment does cause harmful interference to radio or television reception,
which can be determined by turning the equipment off and on, the user is encouraged to try to correct the interference by one or more of the following measures:
-- Reorient or relocate the receiving antenna.
-- Increase the separation between the equipment and receiver.
-- Connect the equipment into an outlet on a circuit different from that to which the receiver is connected.
-- Consult the dealer or an experienced radio/TV technician for help. The device has been evaluated to meet general RF exposure requirement. The device can be used in portable exposure condition without restriction.

IC Statement:

EN
This device contains licence-exempt transmitter(s)/receiver(s) that comply with Innovation, Science and Economic Development Canada's licence-exempt RSS(s). Operation is subject to the following two conditions:
1.This device may not cause interference.
2.This device must accept any interference, including interference that may cause undesired operation of the device.

FR
L'émetteur/récepteur exempt de licence contenu dans le présent appareil est conforme aux CNR d'Innovation, Sciences et Développement économique Canada applicables aux appareils radio exempts de licence. L'exploitation est autorisée aux deux conditions suivantes :
1.L'appareil ne doit pas produire de brouillage;
2.L'appareil doit accepter tout brouillage radioélectrique subi, même si le brouillage est susceptible d'en compromettre le fonctionnement.