SMART GYM

MA001

Version V1.0.0

2023.03.16

Manufacturer: Shenzhen Gymera Technology Co., LTD

Address: 13th Floor, Xingfucheng Commercial Building, Heping East Rd, Longhua District, Shenzhen, China

Thank you for choosing our products. Please read this manual carefully before use.

📖 :

Please read this manual carefully before using the product and keep it properly.The product, accessories, user interface and other illustrations in the manual are schematic diagrams for reference only.Due to the update and upgrade of the product, the actual product and the diagram may be slightly different, please refer to the actual product.

Safety Statement

- Gymera fitness equipment utilizes specific technology, and its features and information are intended for reference purposes only. They should not replace professional medical and fitness guidance. Prior to following any fitness plan or advice from this product, consult a qualified physician or fitness trainer.

- The Gymera system does not guarantee that a user's health or physical condition is appropriate for specific exercises or fitness programs. Engaging in the fitness programs and suggestions provided by this product may involve risks. Users must assess and accept these risks independently and exercise caution and attentiveness during workouts to prevent injuries or harm.

- The fitness data and outcomes supplied by Gymera serve as a reference for users and are not absolutely accurate. Due to individual differences in physical condition, exercise levels, dietary habits, and other factors, the data and training results from Gymera will vary. Users should evaluate the suitability of fitness plans and recommendations on their own, making adjustments based on their physical conditions and sensations.

- Gymera equipment is not meant to replace medical or fitness advice from a physician, fitness trainer, or other professionals. If users experience physical discomfort or health issues, they should promptly consult a qualified doctor or fitness trainer and follow their recommendations.

- As it is not feasible to outline all potential risks in this manual, Gymera assumes no responsibility for injuries, production loss, or indirect damage resulting from incomplete information. Users should assess risks while using the product.

- This warranty excludes faults caused by improper use or failure to adhere to Gymera's instructions.

Software Statement

- The purchaser and/or end user is granted a non-exclusive right to use the software, which is the intellectual property of Shenzhen Gymera Technology Co., Ltd., and is exclusively intended for use with this product.

- The buyer and/or end user may only create copies of the software for personal backup purposes.

- Shenzhen Gymera Technology Co., Ltd. retains all intellectual property rights to the software, as stated above.

- Shenzhen Gymera Technology Co., Ltd. is not required to provide the software's source code, as stated above.

- Shenzhen Gymera Technology Co., Ltd. is responsible for providing customers with remote software upgrades or authorizing an agent of Shenzhen Gymera Technology Co., Ltd. to supply remote software upgrade services, as stated above.

- The owner is responsible for regularly backing up all hardware and software components.

Intellectual Property Statement

- The copyright for this manual and any accompanying information is held by Shenzhen Gymera Technology Co., Ltd. The information provided in this manual is intended solely for installation, training, and service purposes.

- Without written consent from Shenzhen Gymera Technology Co., Ltd., it is strictly prohibited to reuse, redesign, distribute, or otherwise process any portion of this information, whether in electronic or written form.

- Modifications to the product, particularly the device, are not allowed without explicit written permission from Shenzhen Gymera Technology Co., Ltd.

- Copyright © and Trademark ® or Trademark ™ symbols must not be removed. Third-party trademarks and other intellectual property materials belong to their respective owners.

1. Safety Instructions

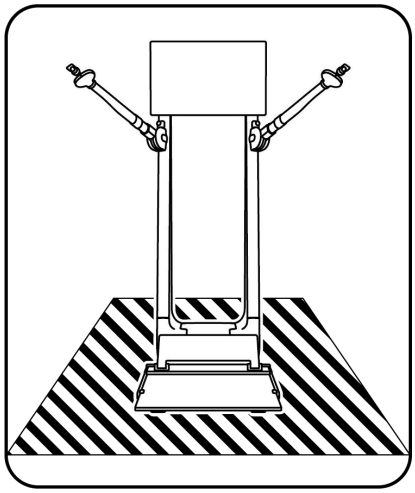

For safety, ensure a clear space with a diameter of 3-4 meters surrounding the machine during training sessions.

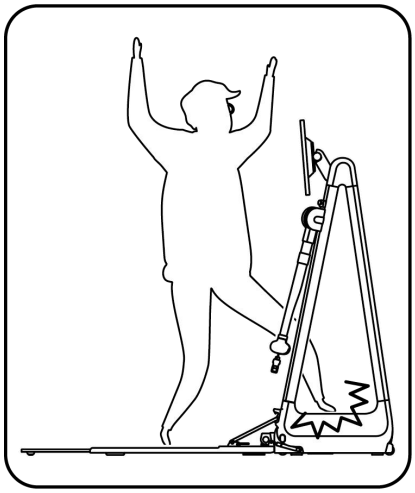

Please do not step on the base of the machine.

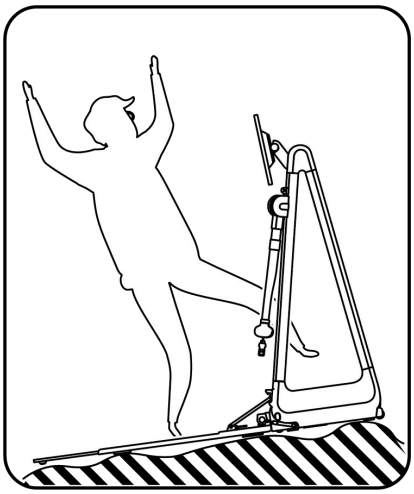

To avoid instability, do not place the machine on uneven ground.

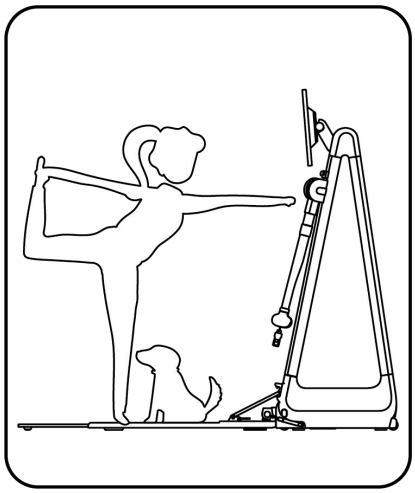

Pets are strictly prohibited from being in the vicinity of the machine.

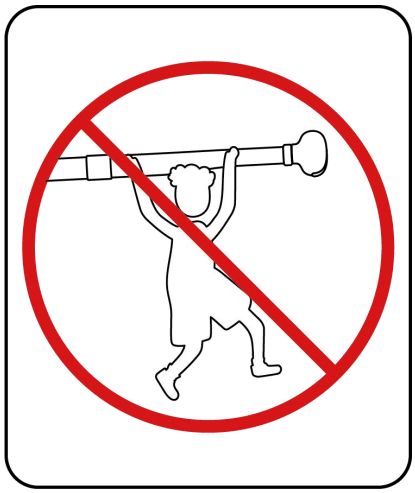

To prevent injury or damage, do not hang from the armbar.

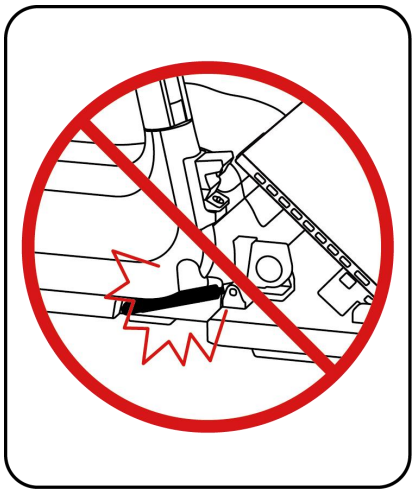

The pneumatic components should not be subjected to severe blows under any circumstances.

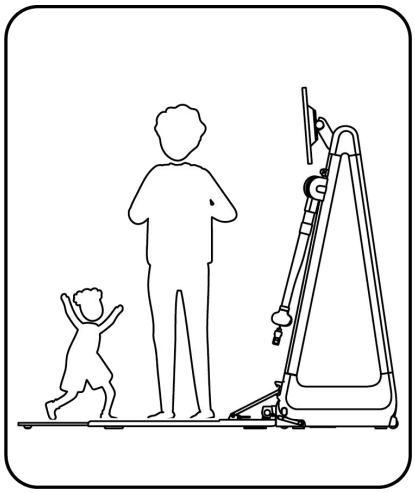

Children must be accompanied by an adult. Do not leave children alone with the machine.

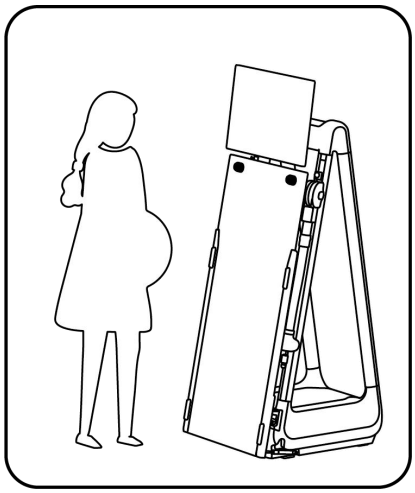

When using the fitness machine, there is a risk of falling, especially for elderly individuals, children, and pregnant women. Please exercise caution if you fall under any of these categories.

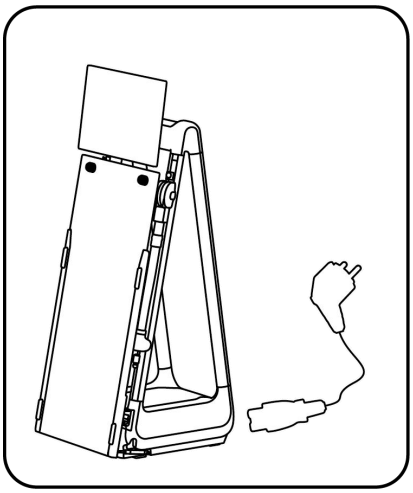

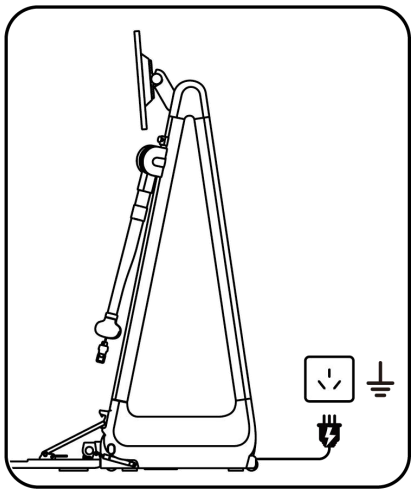

The machine must be unplugged when not in use.

The machine must be plugged into a grounded outlet to prevent the risk of electric shock.

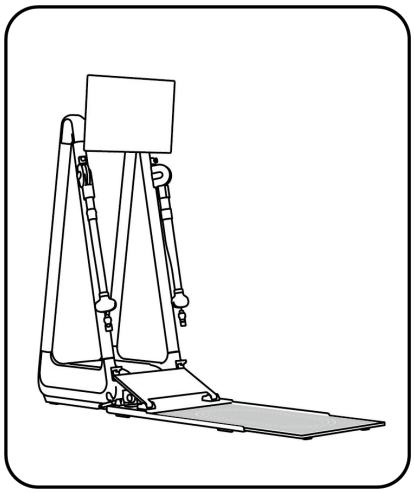

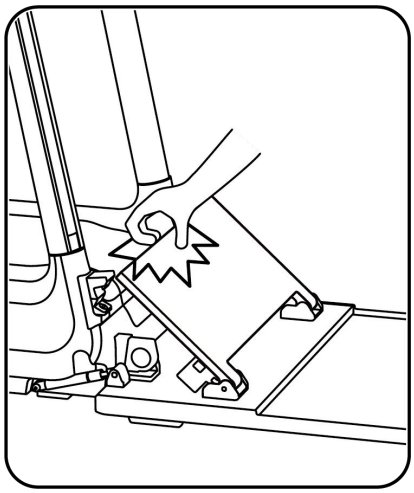

Please use non-slip mats when training.

During the installation of the fixing pedal, take care not to pinch your hands.

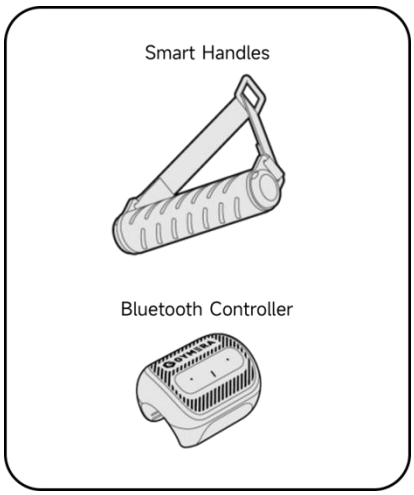

This equipment has been tested and found to comply with the limits for a Class B digital device, pursuant to part 15 of the FCC Rules. These limits are designed to provide reasonable protection against harmful interference in a residential installation. This equipment generates, uses and can radiate radio frequency energy and, if not installed and used in accordance with the instructions, may cause harmful interference to radio communications. However, there is no guarantee that interference will not occur in a particular installation. If this equipment does cause harmful interference to radio or television reception, which can be determined by turning the equipment off and on, the user is encouraged to try to correct the interference by one or more of the following measures:

•Reorient or relocate the receiving antenna.

•Connect the equipment into an outlet on a circuit different from that to which the receiver is connected.

•Consult the dealer or an experienced radio/TV technician for help.

Caution: Any changes or modifications to this device not explicitly approved by manufacturer could void your authority to operate this equipment.

This device complies with part 15 of the FCC Rules. Operation is subject to the following two conditions: (1) This device may not cause harmful interference, and (2) this device must accept any interference received, including interference that may cause undesired operation.

RF Exposure Information

For Smart Handles and Bluetooth Controller:

The device has been evaluated to meet general RF exposure requirement. The device can be used in portable exposure condition without restriction.

For Smart Gym:

This equipment complies with FCC radiation exposure limits set forth for an uncontrolled environment. This equipment should be installed and operated with minimum distance 20cm between the radiator and your body.

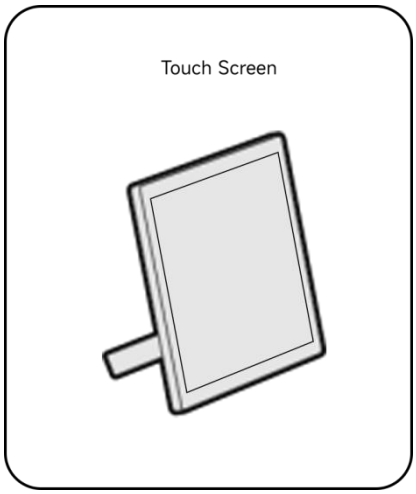

RF Exposure Information

This equipment complies with FCC radiation exposure limits set forth for an uncontrolled environment.

This equipment should be installed and operated with minimum distance 20cm between the radiator and your body.

2. Introduction

Smart Gym (front)

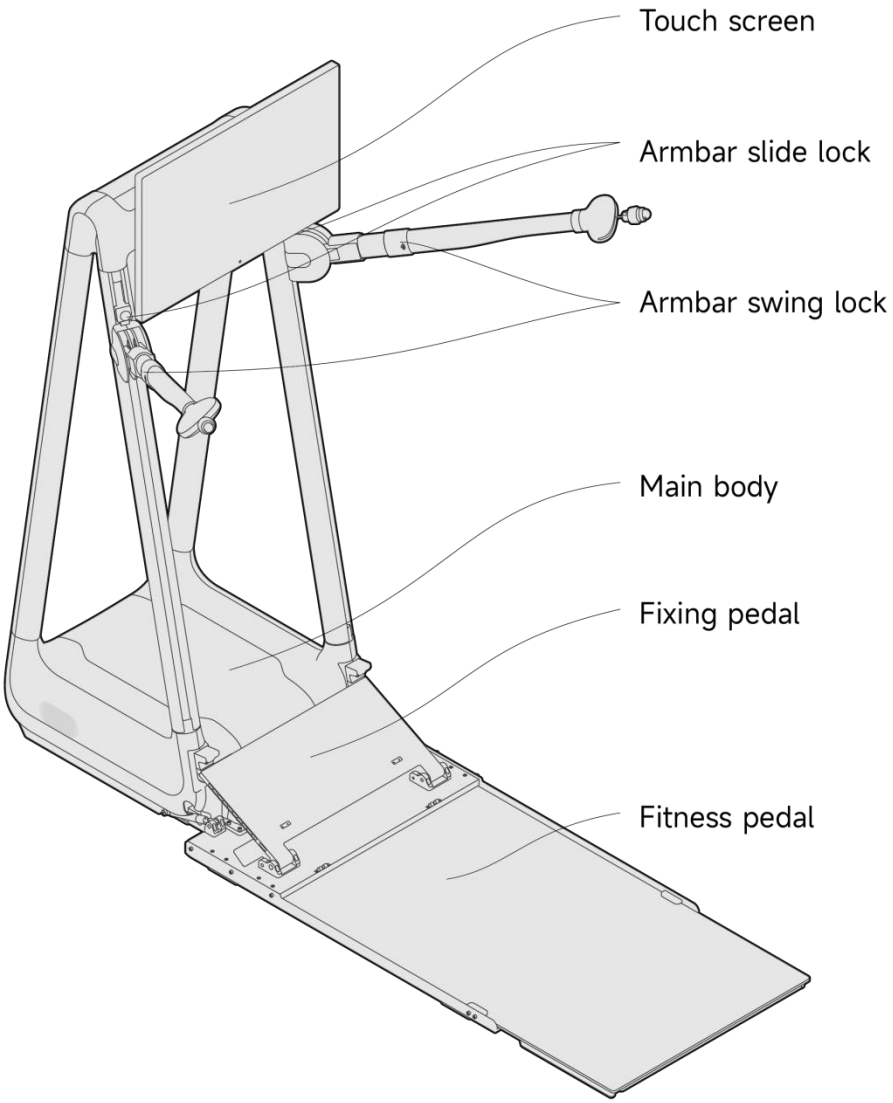

Smart Gym (back)

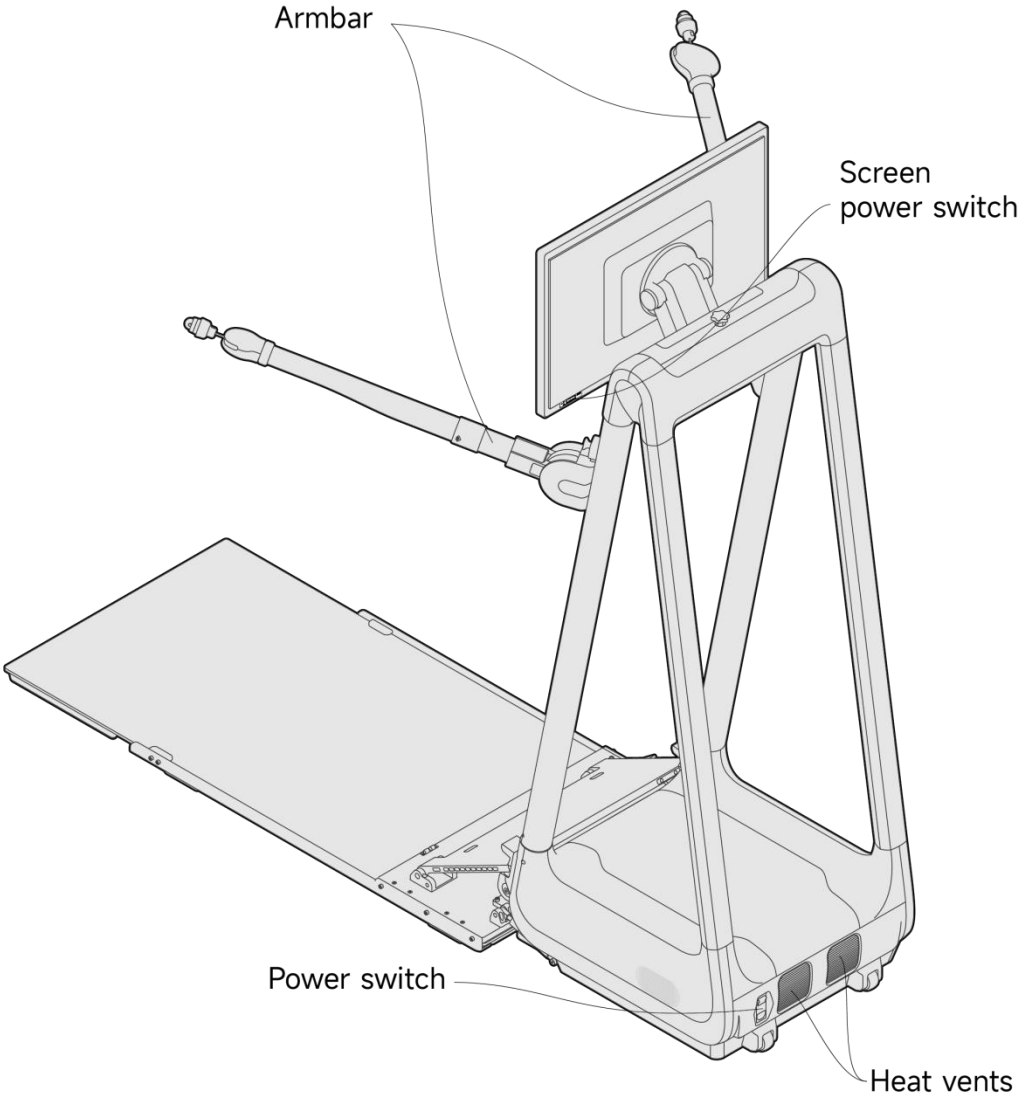

3.Shipping list

1. Main body

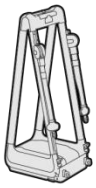

×1

2. Touch Screen

×1

3. Fitness Pedal

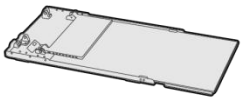

×1

4. Barbell

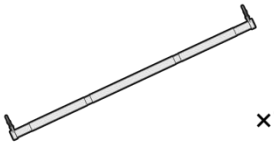

×1

5. Rowing T Bar

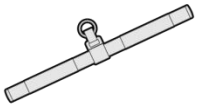

×1

6. Ankle Straps

×2

7. Tricep Rope

×1

8. Smart Handles

×2

9. Bluetooth Controller

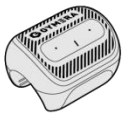

×1

10. Smart Band

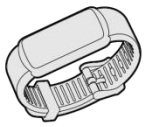

×1

11. Barbell Pad

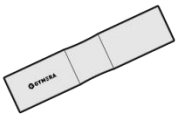

×1

12. Workout Mat

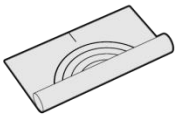

×1

13. Power Cord

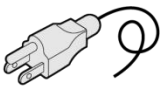

×1

14. T-Handle Wrench

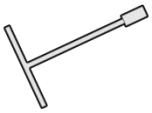

×1

15. Lens Cap

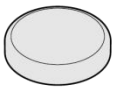

×1

16. Quick Release Pin

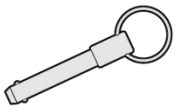

×2

17. Open End Wrench

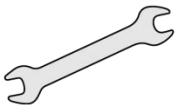

×1

18. Knurled Screw

×2

19. Internal Hexagonal Wrench

×1

20. Adjusting Shim

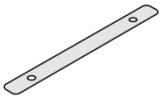

×4

21. Corner Protector

×2

4. Installation and Storage

4.1 MA001 Installation

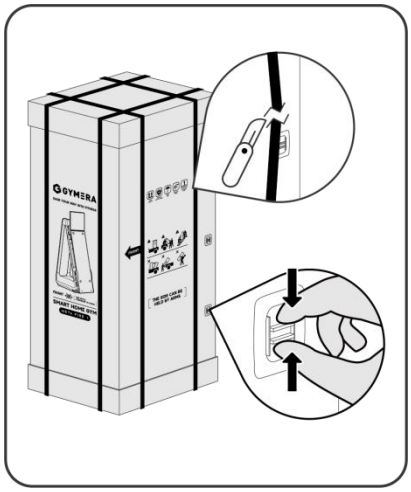

1. Open the packing case as shown.

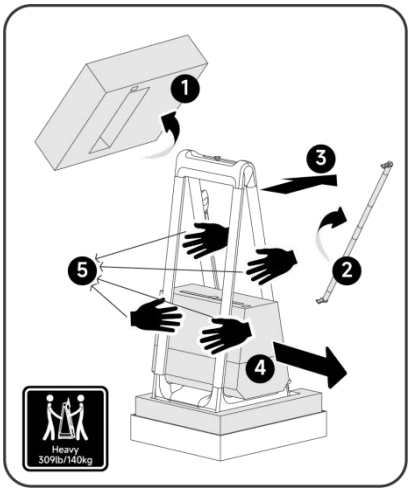

2. Take out the parts in the order shown in the figure; Move the main body out and put it on the flat ground (3-4 people are recommended to operate).

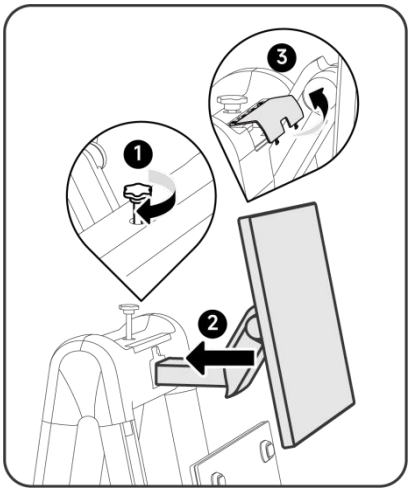

3. After loosening knurled screw clockwise, install the touch screen on the main body and tighten it, and then uncover the power cord cover.

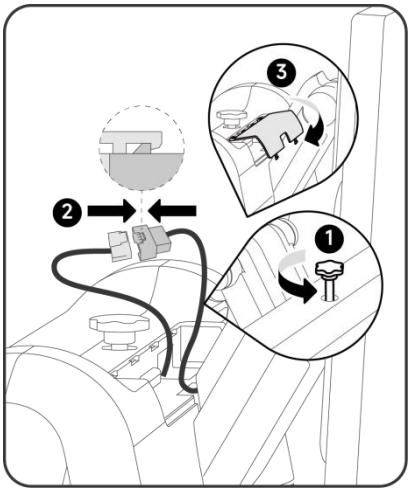

4. After connecting the cable to the main body, cover the cord cover.

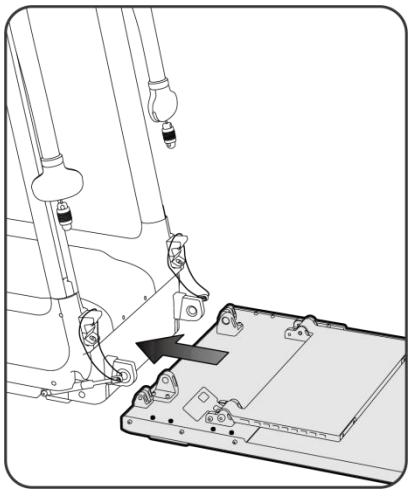

5. After unpacking the fitness pedal, align the pedal with the main body.

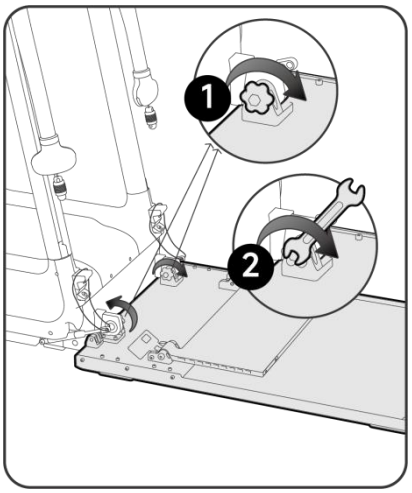

6. Tighten both sides manually with knurled screw clockwise and then tighten with the open end wrench.

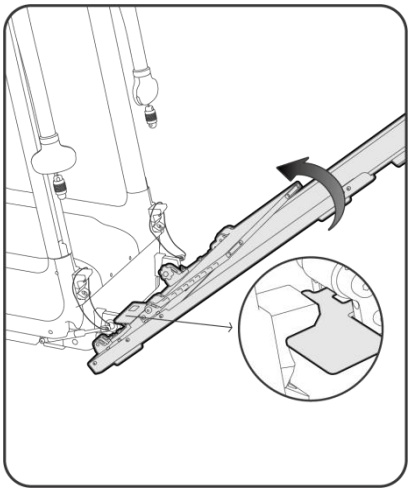

7. Turn the fitness pedal up.

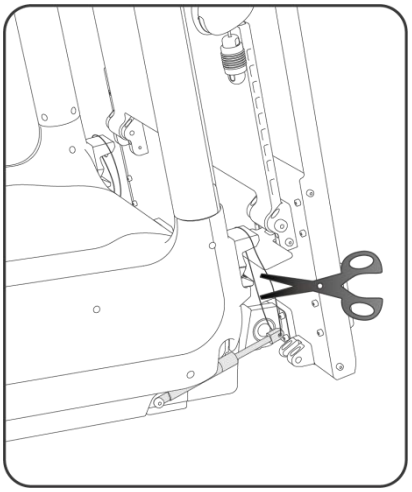

8. Cut the cable ties of the hydraulic rods on both sides.

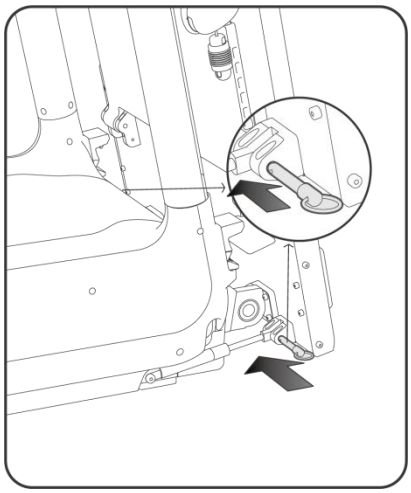

9. After the hydraulic rods is aligned, insert the quick release pin on both sides, then the pedal installation is complete.

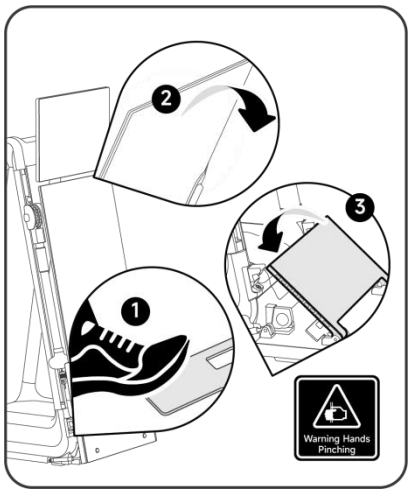

10. Gently step on the locking plate, hold the fitness pedal and expand it. Connect the fixing pedal to the main body.

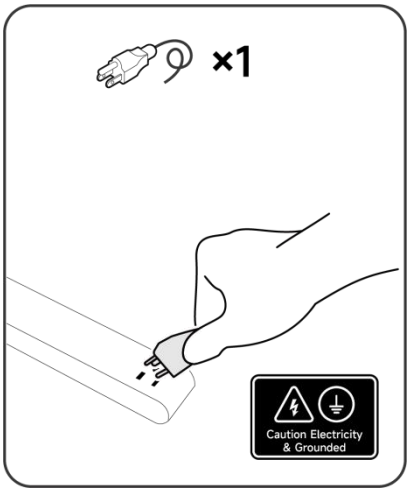

11. Connect the power cord, and ensure that the socket is grounded.

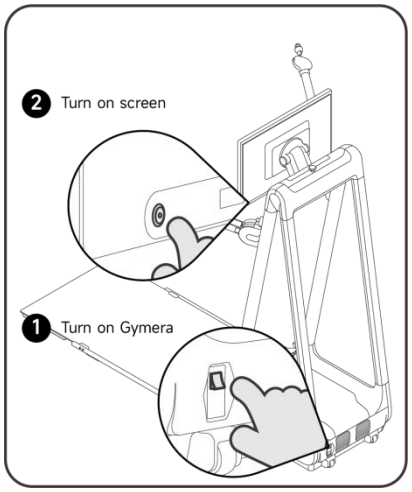

12. Power on the main body, and power on the monitor.

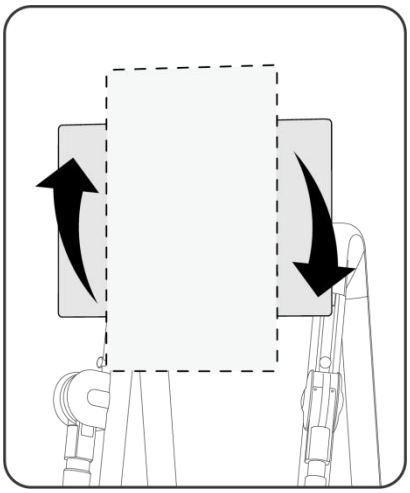

13. The touch screen can be rotated clockwise 180°, counter-clockwise to return to position.

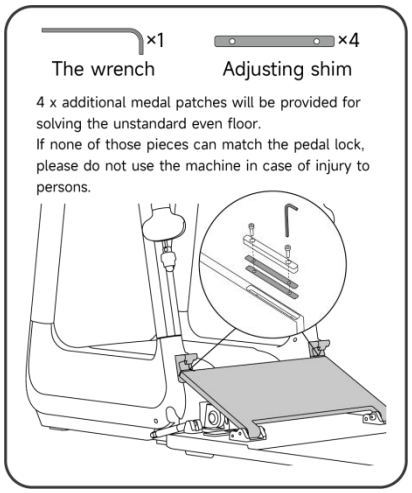

14. Placement suggestions.

4.2 Use of accessories

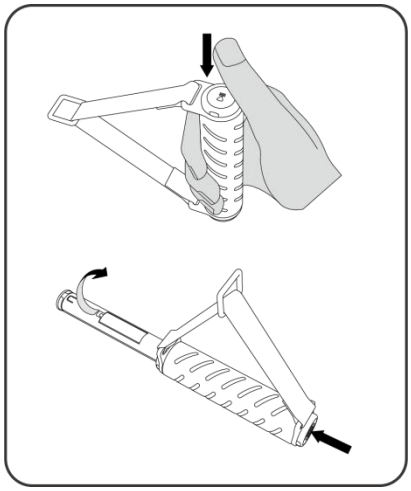

1. Press the key on the smart handles to start and stop training, and press the forward button to replace the battery.

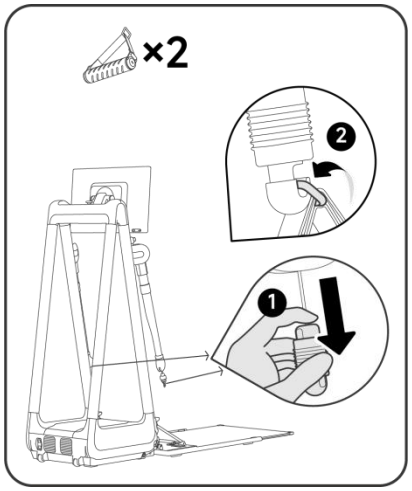

2. As shown in the figure, hold the clasp and gently press down to assemble the accessories.

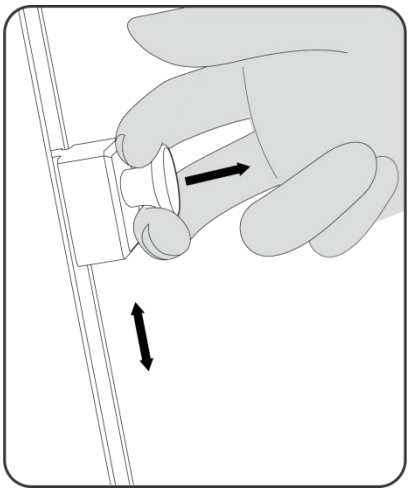

3. After holding the armbar, the other hand gently pulls the armbar slide lock to adjust the height.

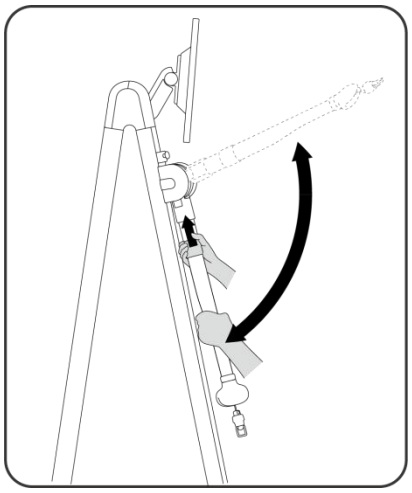

4. Hold the armbar swing lock to slide up, then hold the armbar with the other hand, adjusting the armbar to the desired angle.

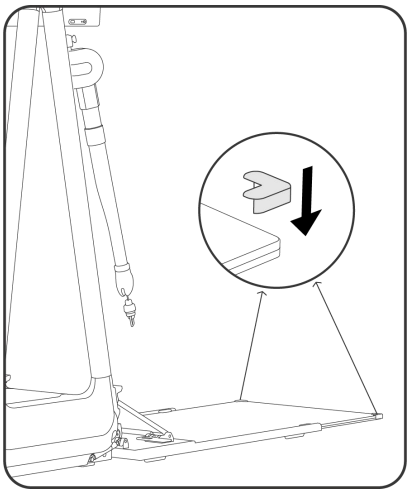

5. Install the corner protector of the fitness pedal.

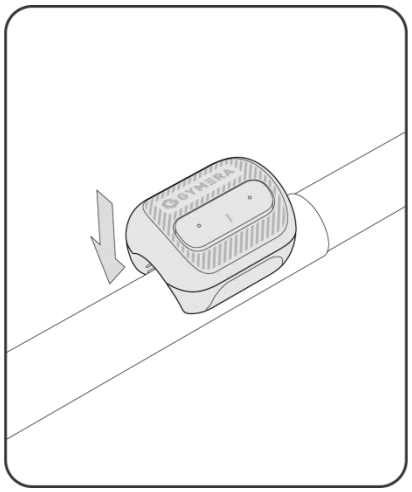

6. Install the Bluetooth controller on the barbell.

4.3 Storage

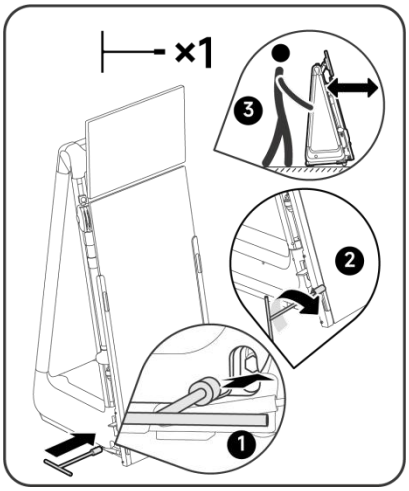

Before moving the machine, make sure to turn off the power and unplug the power cord. Fold the fitness pedal, insert the T-handle wrench and rotate it clockwise for a maximum of 4 turns. After the front wheels are completely down, unplug the T-handle wrench and push the machine to the required position. After moving, make sure that the hydraulic jack is fully back (there is no resistance when turning the T-handle wrench counterclockwise) before unfolding the fitness pedal.

5. Precautions

(1) Keep MA001 away from wet areas such as bathrooms, kitchens, basements, and swimming pools to prevent electrical hazards.

(2) Install MA001 on a flat surface to avoid the risk of injury or damage if it falls.

(3) Store and use MA001 in a cool, dry, well-ventilated area, away from sources of radiation and heat.

(4) Do not cover or obstruct the heat vents on the rear of MA001, and avoid placing MA001 on surfaces such as beds, sofas, blankets, or similar objects.

(5) The power voltage range for device operation is labeled on the rear of MA001.

(6) If you are unsure about the input voltage, contact the local dealer or power company for assistance.

(7) If MA001 is not going to be used for an long period, disconnect the power supply to avoid electrical shock and damage from abnormal power supply voltage during thunderstorms.

(8) Avoid overloading the socket to prevent the risk of fire or electrical shock.

(9) Do not insert other objects into MA001, as this may cause a short circuit or electrical shock.

(10) Do not attempt to disassemble or repair MA001 by yourself.

(11) In case of issues with MA001, contact our after-sales service team directly.

(12) Avoid pulling or twisting the power cord excessively.

(13) Ensure the socket is located near the MA001.

(14) The power plug or appliance coupler serves as a new opening device, and the disconnecting device should be easily accessible when the MA001 is in normal use.

(15) The product can only consume zero power when not connected to any external input power supply.

(16) Avoid contact between hydrofluoric acid (Hydrofluoric Acid) preparations and mirror surfaces or pedals.

(17) When unfolding the fitness pedals, hold them with your hands and gently lower them to avoid damage to the pedals or injury to people.

Note: Shenzhen Gymera Technology Co., Ltd. holds the final interpretation of the above terms.

6. Basic Parameters

SMART GYM – MONOCEROS α	
Model	MA001
AC Input	100-240V, 50-60Hz
Max Power	1400W
Processor	4Cortex-A76 + 4Cortex-A55 + Mali-G610+ 6TOPS NPU
Gross Weight	~ 385 lbs (175kg)
Net Weight	~ 286 lbs (130kg)
Color	Blue/Pink
Screen	27-inch 4K
Multi-media	HD camera, audio x2
Connection	WIFI , BT
Smart Handles - Monoceros Rose 001	
Model	MR001
DC Input	0.9~1.5V DC, 1.5mA
Battery	AAA Battery
Connect	Bluetooth
Material	Aluminum alloy + Rubber
Weight	~200g
Bluetooth Controller - Monoceros Rose 002	
Model	MR002
DC Input	0.9~1.5V DC, 1.5mA
Battery	AAA Battery

Connect	Bluetooth
Material	ABS+ Rubber
Weight	~40g

7. After-Sales and Disclaimer

Quality Assurance Commitment

Gymera products are guaranteed free of charge for a period of two years from the date of purchase. The following situations are not covered by the warranty:

(1) Faults caused by human factors, such as unauthorized disassembly and modification.

(2) Failures caused by an environment that does not meet the requirements.

(3) Failures or damage caused by irresistible factors such as fire, earthquake, or lightning.

(4) Lack of product serial number or unauthorized alteration of the serial number.

(5) Consumable parts such as barbell protective covers and anti-slip mats are not covered by the warranty.

(6) Faults and damages caused by incorrect or improper use, storage, or operation of the product that do not follow product guidance requirements.

(7) Replacement parts authorized in writing by Shenzhen Gymera Technology Co., Ltd. due to incorrect use, accidents, or exceeding the rated capacity caused by the buyer due to improper operation, incorrect installation, or incorrect repair and maintenance. The warranty also does not cover normal wear or corrosion.

(8) The product has exceeded its shelf life.

8. Explanation of Product Labeling

Symbol	Explanation
	Highly hazardous. Improper handling or action may result in death or serious injury.
	Moderately hazardous. Improper handling or action may cause minor injury to personnel, damage to fitness equipment, etc.
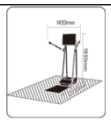	Failure to follow this labeling may result in damage to the fitness equipment, loss of data, or other unpredictable results.
	Failure to follow this labeling may result in death or serious injury.
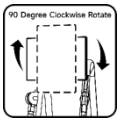	Improper use may cause damage to the display screen and inhibit normal use.
	Pinch point. Keep hands and fingers clear.
	Foot hazard area. Foot protection is required.
	Do not dangle from the arms. Dangling may damage the equipment or cause the equipment to tip over.
	This equipment must be grounded to avoid electric shock, damage to the equipment, and fire.
	Additional information is available. Read the supplemental information to fully understand risks.

Technical Support and After-Sales Service

Thank you for your trust and support in Gymera products. We are committed to providing you with satisfactory service. You can get technical support and after-sales service through the following ways:

(1) Gymera APP - My file - Feedback and Support
(2) Email: support@gymera.net
(3) Tel: +86-0755-23732305
(4) Web: www.gymeratech.com

Disclaimer

The company assumes no responsibility for damages caused by natural disasters, such as earthquakes or floods, beyond the scope of our company's responsibility. The Company disclaims any liability related to or arising from the application or use of any other product or application mentioned herein. The company does not explicitly, implicitly, or in any other way authorize the use of related patent rights or patent licenses for the systems, instruments, machinery, materials, methods, or processes that may be used with this product or any combination with this product.

For third-party software used by this product, the company does not assume any form of guarantee or technical support responsibility.

Note: Shenzhen Gymera Technology Co., Ltd. holds the final interpretation of the above terms.