19.1.6 Mainboard LED Indicator Layout

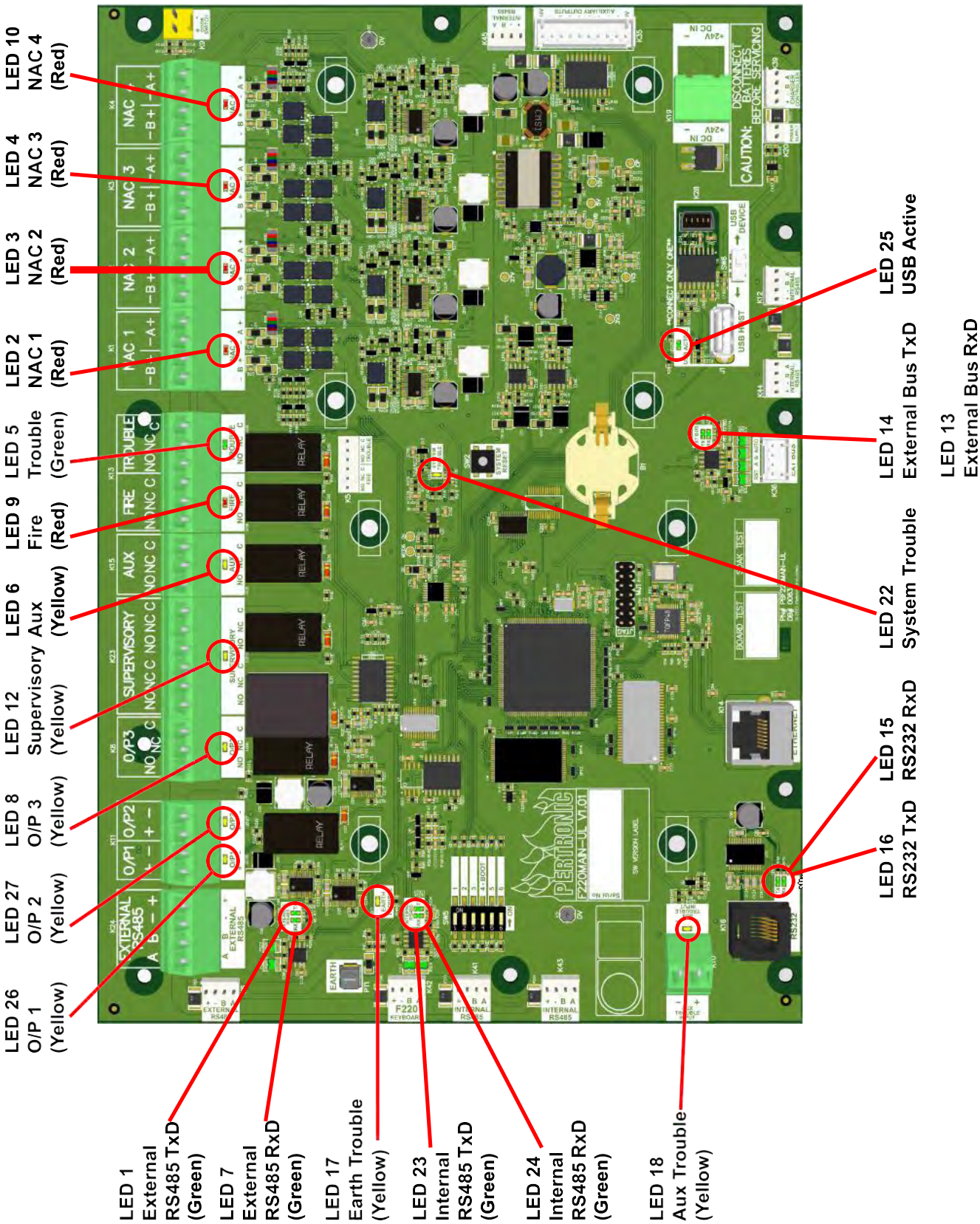

Figure 19-5: F220 Mainboard LED Layout

LED Designator	Function	LED Color
1	External High-Speed RS-485 TxD	Green
2	NAC 1 Active	Red
3	NAC 2 Active	Red
4	NAC 3 Active	Red
5	Trouble Relay On	Green
6	Auxiliary Relay On	Yellow
7	External High-Speed RS-485 RxD	Green
8	Output 3 Relay On	Yellow
9	Fire Relay On	Red
10	NAC 4 Active	Red
11	NA	
12	Supervisory	Yellow
13	Extension Bus RxD	Green
14	Extension Bus TxD	Green
15	Isolated RS232 RxD	Green
16	Isolated RS232 TxD	Green
17	Ground Trouble	Yellow
18	Auxiliary Trouble	Yellow
19	NA	
20	NA	
21	NA	
22	System Trouble	Yellow
23	Internal High-Speed RS-485 TxD	Green
24	Internal High-Speed RS-485 RxD	Green
25	USB Active	Green
26	Output 1	Yellow
27	Output 2	Yellow

Table 19-3: LED Indicators

19.1.7 Mainboard External Connections

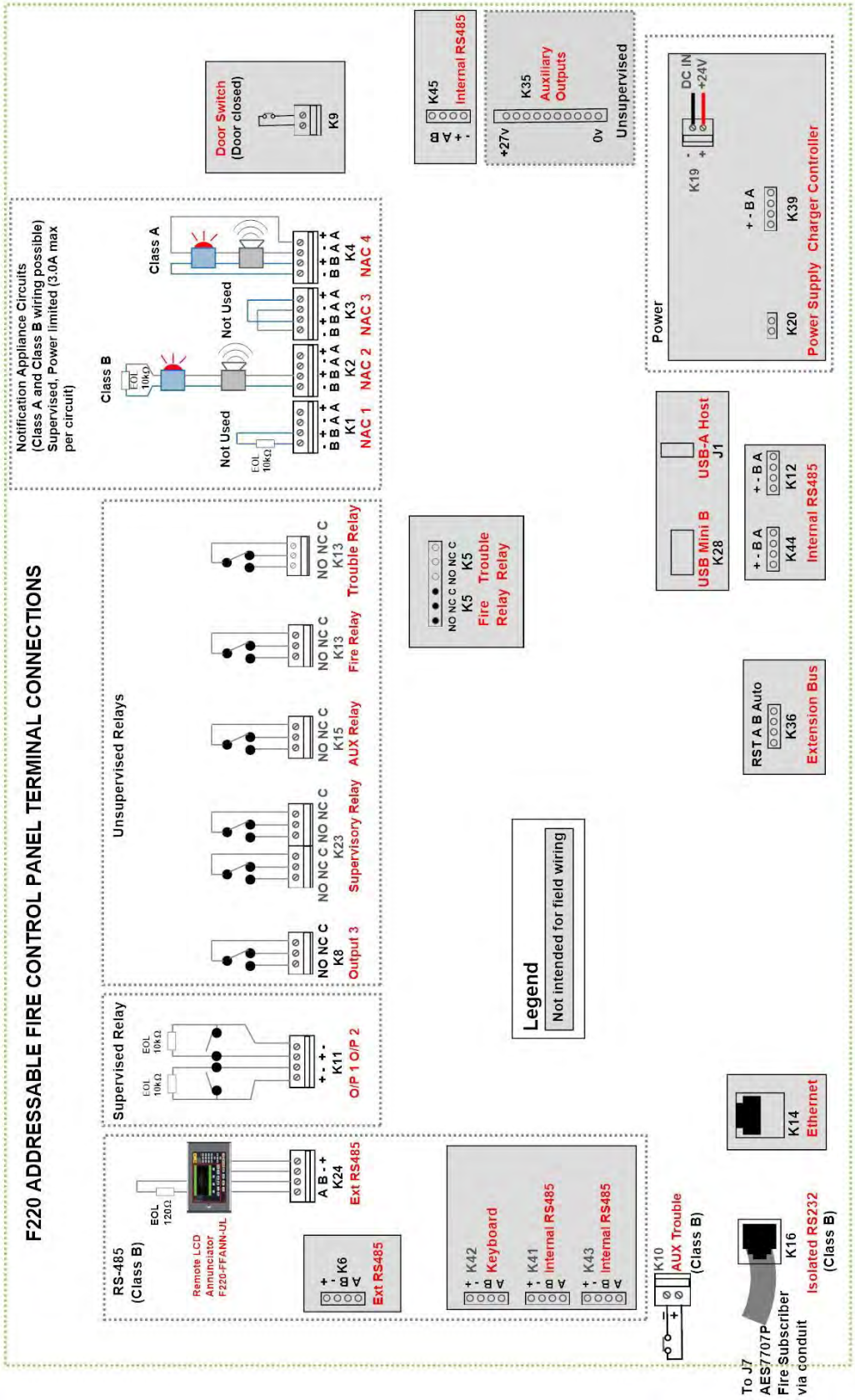

Figure 19-6: F220 Mainboard External Connections

19.1.8 Mainboard NAC Class A and Class B Wiring

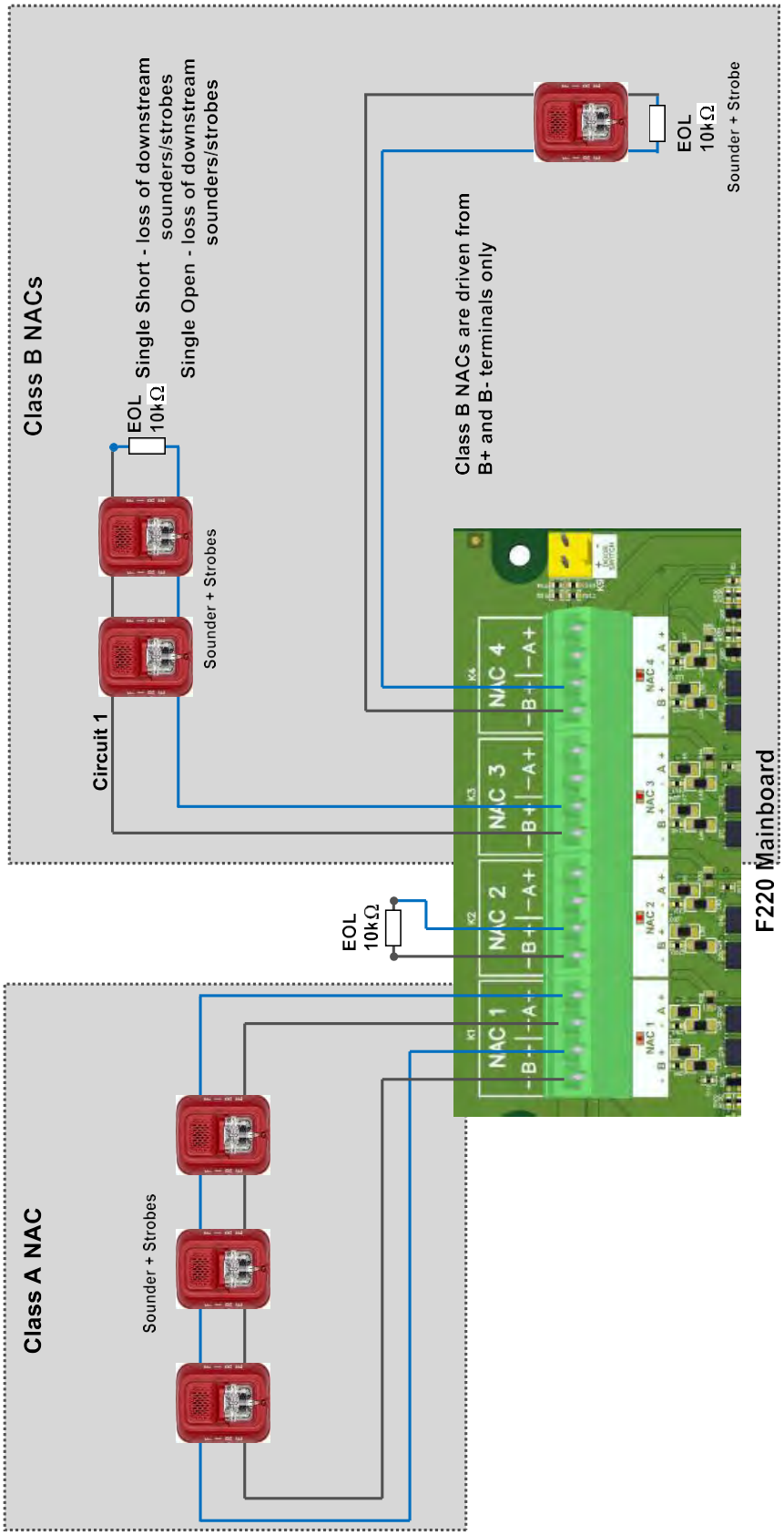

Figure 19-7: F220 Mainboard NAC Class A and Class B Wiring

19.1.9 Mainboard NAC Wiring Requirements

Table 19-4 lists the NAC wiring requirements.

NAC Load (A)	Maximum Total Allowable Loop Resistance (ohms)	Class B Max allowable wire pair's length (feet)				Class A Max allowable wire pair's length (feet)			
		AWG 12 (Solid)	AWG 14 (Solid)	AWG 16 (Solid)	AWG 18 (Solid)	AWG 12 (Solid)	AWG 14 (Solid)	AWG 16 (Solid)	AWG 18 (Solid)
0.5	6.4	1650	1035	650	410	825	518	325	200
1.0	3.2	825	518	325	205	412	259	164	100
1.5	2.1	550	345	220	136	275	173	108	65
2.5	1.6	412	260	163	102	206	129	80	50

Table 19-4 NAC Wiring Distance and Gauge Requirements

NOTE:

1.The maximum allowable NAC line resistance is 10 ohms.

2. The distances in Table 19-4 are based on the current draw of the highest candela strobes at the low end of the supported NAC voltage, with the entire load at the end of the circuit. More accurate distances can be determined by performing point-to-point voltage calculations using the specific devices and their distribution along the NAC.

19.2 F220 Keyboard Display

19.2.1 F220 Keyboard Display PCB Connector, Switch and Indicator Layout

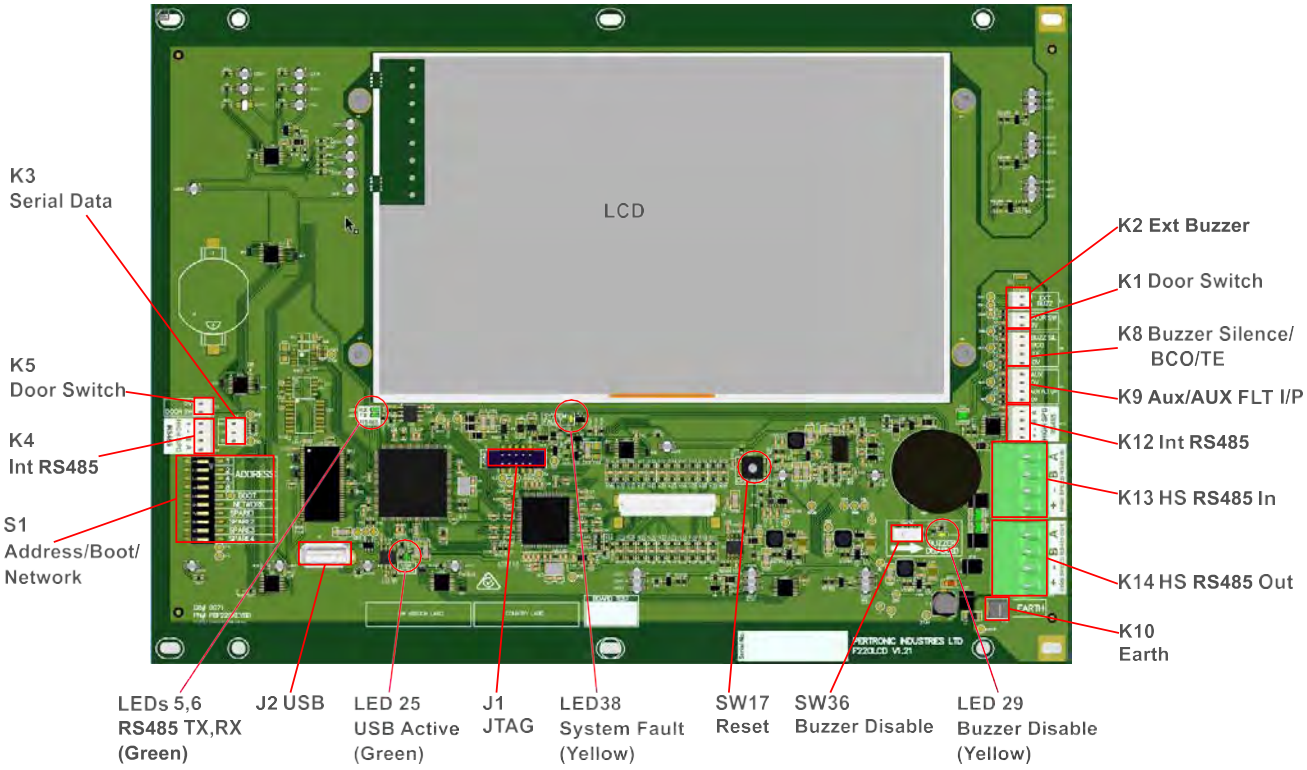

Figure 19-8: F220 Keyboard Display Connectors and Switch Layout (Reverse)

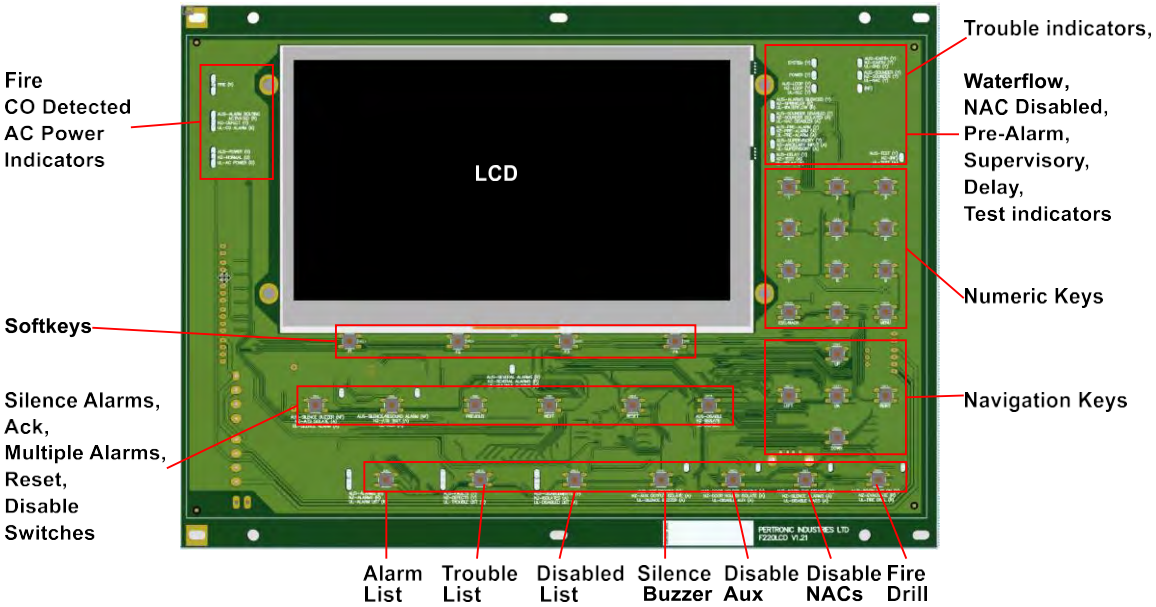

Figure 19-9: F220 Keyboard Display Switches and Indicator Layout (Panel)

19.2.2 F220 Keyboard Display Field Wiring

Connectors									
Connector Designator	**Connector Description**	**Connector Header/ Plug**	**Connector PCB label**	**Input/ Output**	**Protocol/ Rating/ Signaling Type**	**Wiring size range (AWG) Solid/ (Stranded)**	**Supervised**	**Power Limited**	**Output: Max Frequency Max Current Max Voltage**
K1	Door Switch		Door SW 0V	IN		- (13-24)	Supervised	Power limited	Not intended for field wiring
K2	Not Used		Not Used					Not Used	Not intended for field wiring
K3	Serial Data		RxD, 0V, TxD	I/O		11-24 (13-24)		Power limited	Not intended for field wiring
K4	Internal RS485		+ - B A Internal RS485	I/O		11-24 (13-24)		Power limited	Not intended for field wiring
K5	Door Switch		0V Door Switch	IN		- (13-24)	Supervised	Power limited	Not intended for field wiring
K8	Buzzer Silence		Buzz SL BCO TE 0V	OUT				Power limited	Not intended for field wiring
K9	Aux/Aux Flt I/P		Aux, 0V Aux Flt 0V	IN		- (22-26)		Power limited	Not intended for field wiring
K10	Ground		Ground Terminal			12-30 (12-30)	Not intended for field wiring		
K12	Internal RS-485		+ - B A High-Speed RS485	I/O		- (22-26)		Power limited	Not intended for field wiring
K13/Plug1	HS RS-485 IN	XCFR2 FW2/FW2	+ - B A High-Speed RS485	I/O	RS-485 and 24 VDC supply	12-22 (12-22)		Power limited	Panel: Not intended for field wiring Annunciator: field wiring
K14/Plug2	HS RS-485 OUT	XCFR2 FW2/FW2	+ - B A High-Speed RS485	I/O	RS-485 and 24 VDC supply	12-22 (12-22)		Power limited	Panel: Not intended for field wiring Annunciator: Field wiring
J1	JTAG		JTAG	I/O		N/A		Power limited	Not intended for field wiring
J2	USB-A			I/O		N/A		Power limited	Not intended for field wiring

Table 19-5: F220 Keyboard Display Field Wiring

19.3 SLC Driver Board (F220AP2LDB)

19.3.1 SLC Connector and Switch Layout

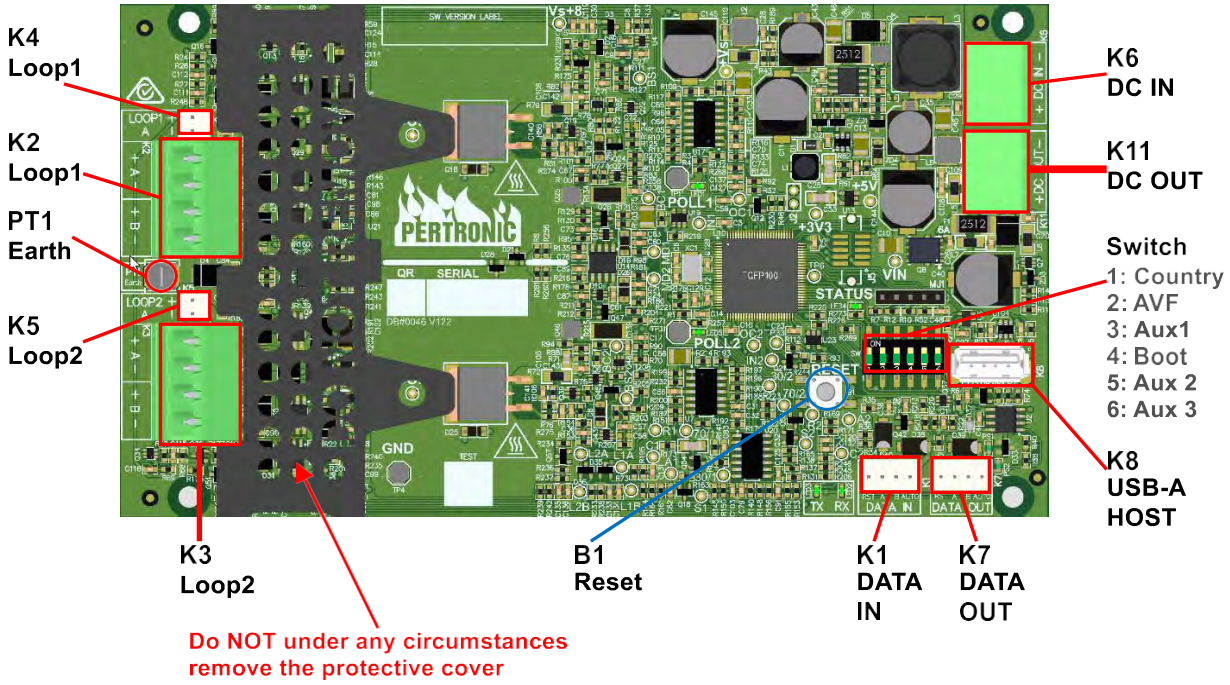

Figure 19-10: SLC Driver Connector and Switch Layout

19.3.2 SLC Driver LED Indicator Layout

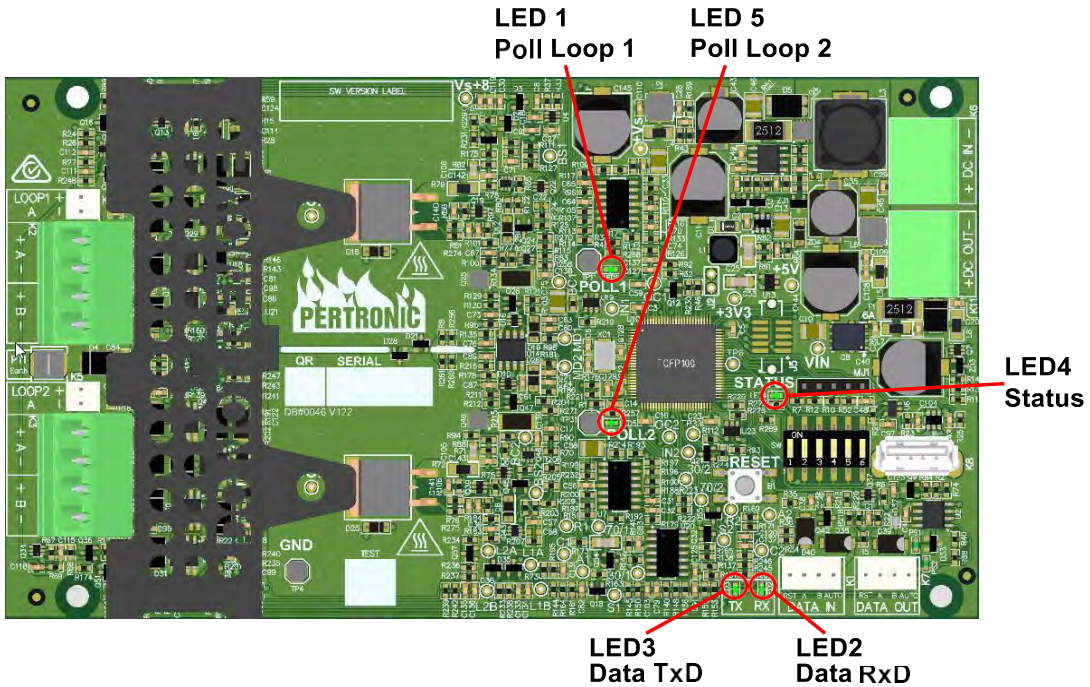

Figure 19-11: SLC Driver LED Indicator Layout

19.3.3 Updating SLC (Loop) Driver Firmware

The SLC (Loop) Driver firmware can be loaded onto the Driver board using a USB memory stick.

The firmware update process does not check the installed firmware version, the uploaded file will always replace the currently loaded firmware.

USB memory stick setup:

- The USB memory stick must be FAT32 formatted, See 7.4 USB Flash Memory File System Format.
- Open the zip file containing the firmware to be installed. The zip file name will be in the format eNet_package_USA_vx.x.x.zip where x is the version numbering.
- Copy the entire folder named 'LD3_Firmware' into the root directory of the USB stick.

SLC (Loop) Driver board firmware upload process:

- Plug in the USB driver (K8 on Driver PCB)
- Set DIP switch 4 to ON (Green square). This switch is labelled 'SW' and is only read at startup.
- Press the reset button labelled 'Reset'.
- The Status LED will start to blink quickly (See Figure 19-12 below)
- Wait for the USB LED to stay on constantly indicating that upload process was successful.
- Switch DIP switch 4 to OFF.
- Press the 'Reset' button.
- Wait a few seconds to ensure the two polling LEDs are flashing.

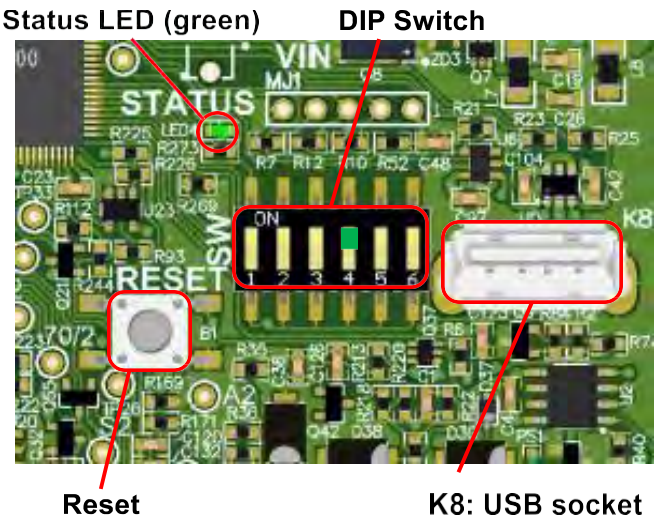

USB LED Activity	Notes
Slow blink, 0.5s on /0.5s off	LD3 is ready for a firmware upload and waiting for a USB memory stick to be inserted.
Constant fast blink	LD3 is uploading firmware from a USB memory stick
Steady on	Successful firmware upload.
Slow blink, 0.5s on /0.5s off	Firmware upload failure if the USB memory stick is still inserted.

Figure 19-12: SLC (Loop) Driver Firmware Upload LED Activity

19.3.4 SLC Driver PCB Field Wiring

Connectors									
Component	**Description**	**Connector Header/ Plug**	**Connector PCB Label**	**Input/ Output**	**Protocol/ Rating/ Signaling Type**	**Wiring size range (AWG) Solid/ (Stranded)**	**Supervised**	**Power Limited**	**Output: Max Frequency Max Current Max Voltage**
K1	Data In		Rst A B Auto DATA IN	I/O		- (22-26)		Power limited	Not intended for field wiring
K2/Plug4	SLC 1	XCFR2 FW2/FW2	Loop 1 - B + - A +	I/O	Special Application: Intelligent Addressable Extended CLIP	12-22 (12-22)	Class A, Class B or mixed, depending on installation. Class X	Power limited	CLIP Protocol 500mA 28 VDC **Max line resistance** Class A: 50 Ohm Class B: 40 Ohm
K3/Plug5	SLC 2		Loop 2 - B + - A +	I/O		12-22 (12-22)			
K4	SLC 1		Loop 1 A - +	I/O		- (22-26)			Not intended for field wiring
K5	SLC 2		Loop 2 A - +	I/O		- (22-26)			
K6	DC IN		+ DC IN -			12-22 (12-22)	(Input) Not intended for field wiring		
K7	Data Out		Rst A B Auto DATA IN	I/O		- (22-26)		Power limited	Not intended for field wiring
K8	USB-A Host							Power limited	Not intended for field wiring
K11	DC Out		+ DC IN -			12-22 (12-22)		Dependent on K6	Not intended for field wiring
PT1	Ground					12-30 (12-30)		N/A	Not intended for field wiring

Table 19-6: SLC Driver PCB Field Wiring Data

19.3.5 SLC Detector and MPS Wiring

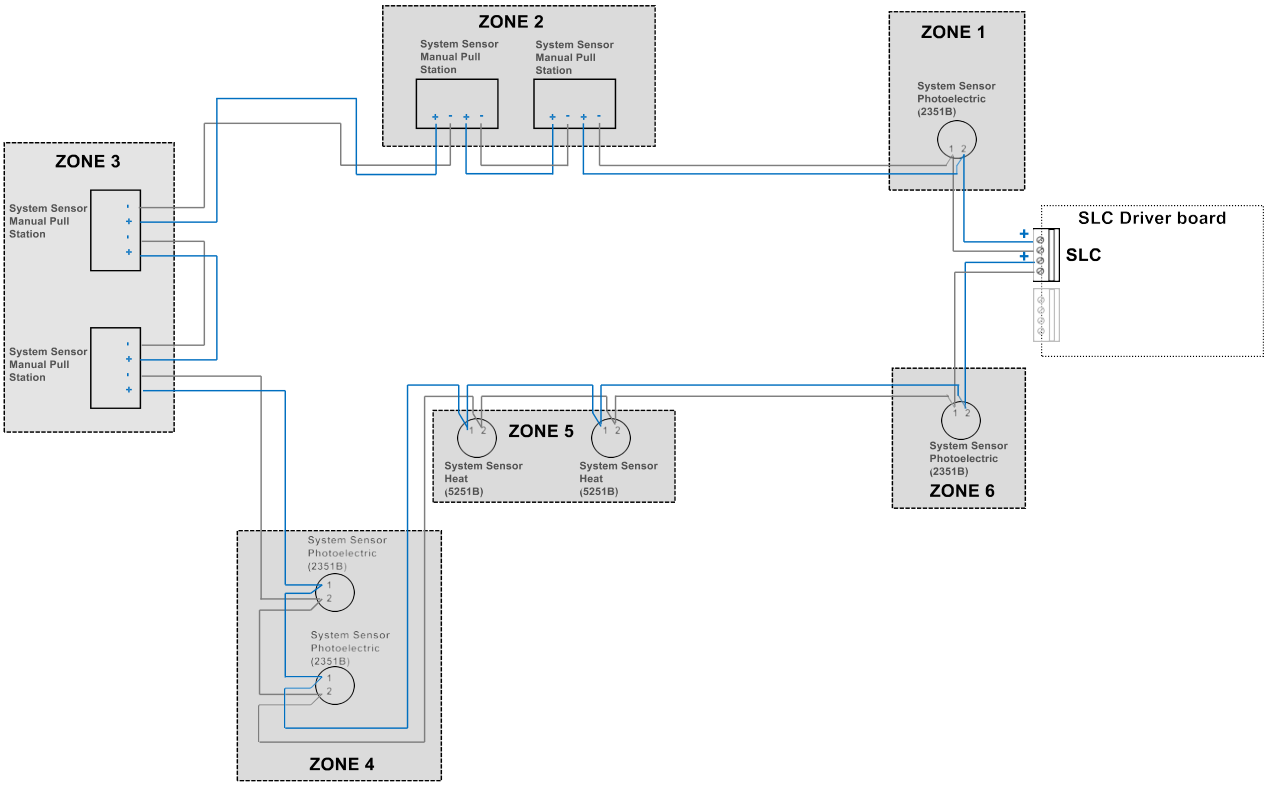

Figure 19-13: SLC Class A Detector Wiring

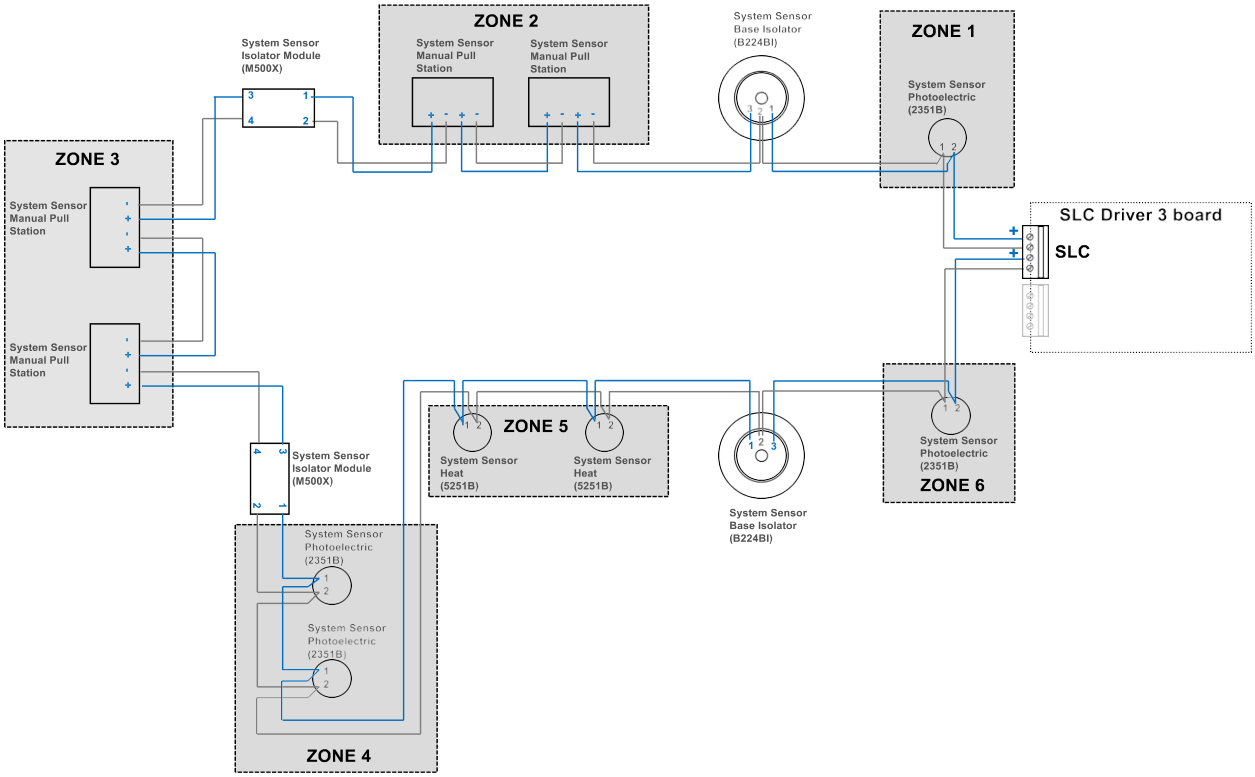

Figure 19-14: SLC Class X Detector Wiring

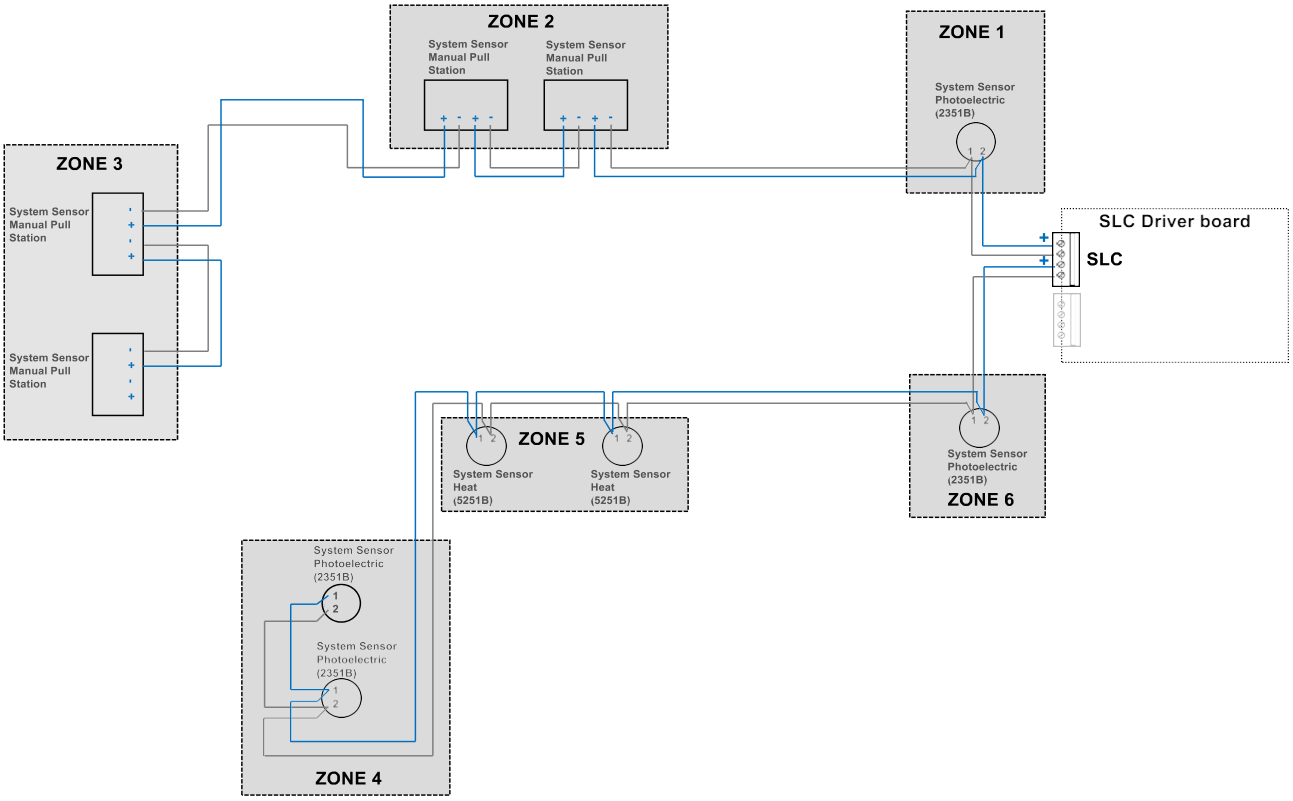

Figure 19-15: SLC Class B Detector Wiring

19.3.6 SLC Relay Wiring

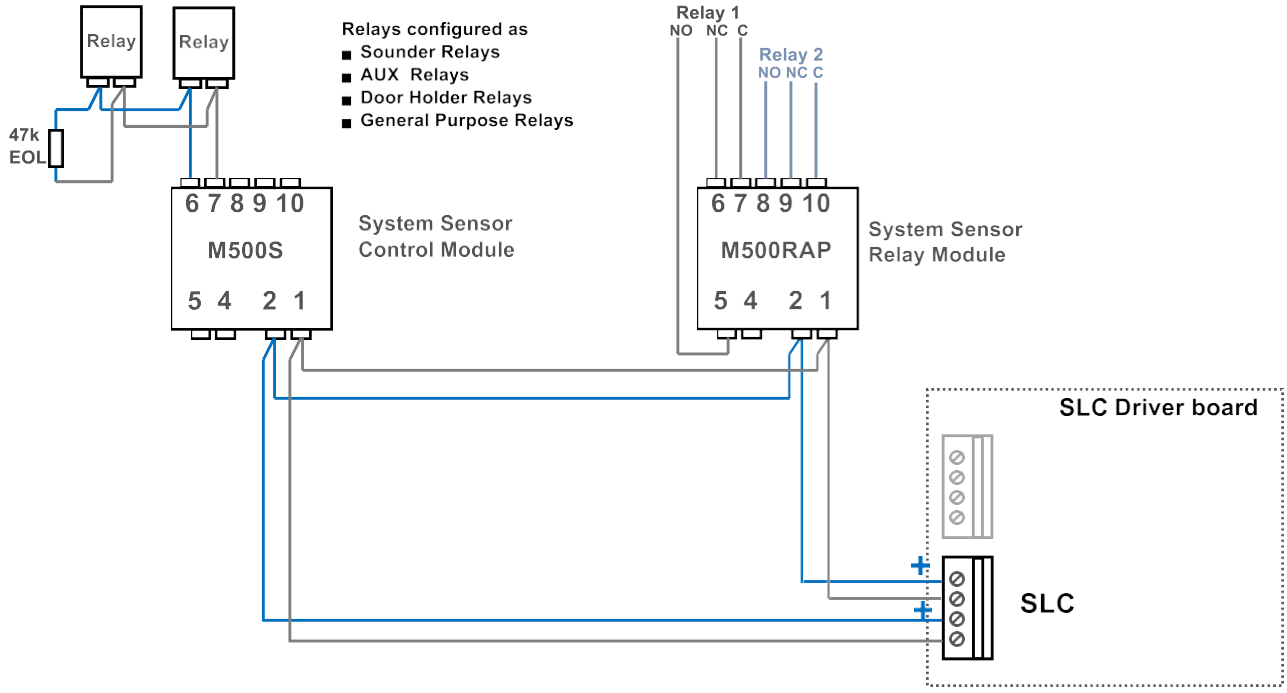

Figure 19-16: SLC Class A Relay Wiring

19.3.7 SLC Carbon Monoxide and Waterflow Monitor Wiring

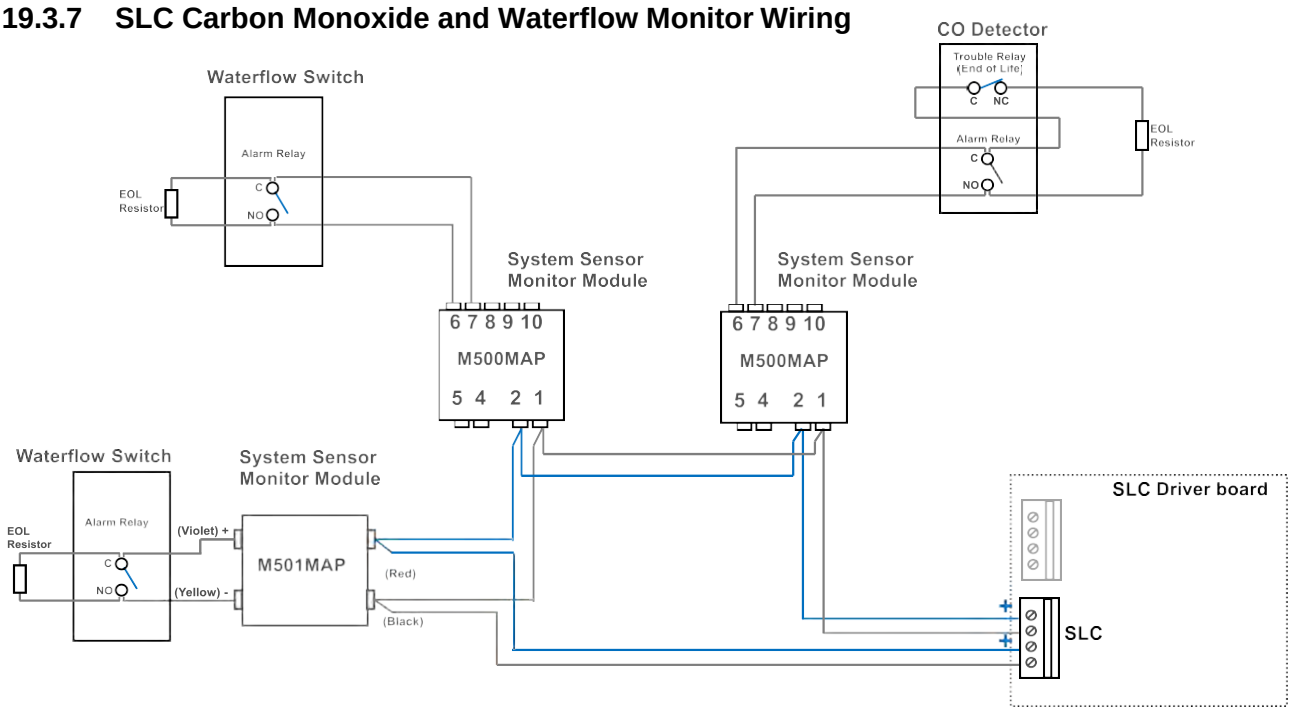

Figure 19-17: SLC Class A Carbon Monoxide (CO) and Waterflow Monitoring Wiring

19.4 Charger Controller Board

19.4.1 Charger Controller Connectors and Switch Layout

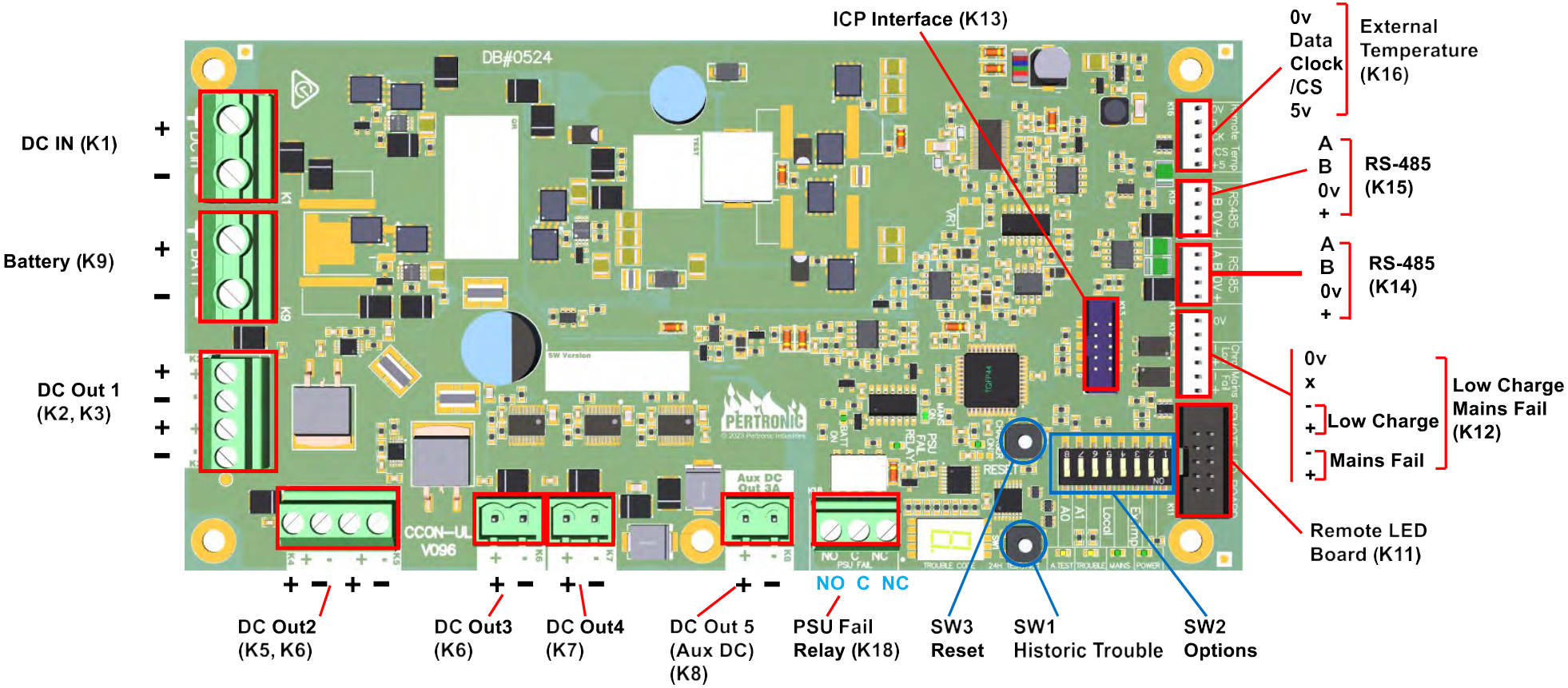

Figure 19-18: Charger Controller Board Connectors and Switches

19.4.2 Charger Controller LEDs

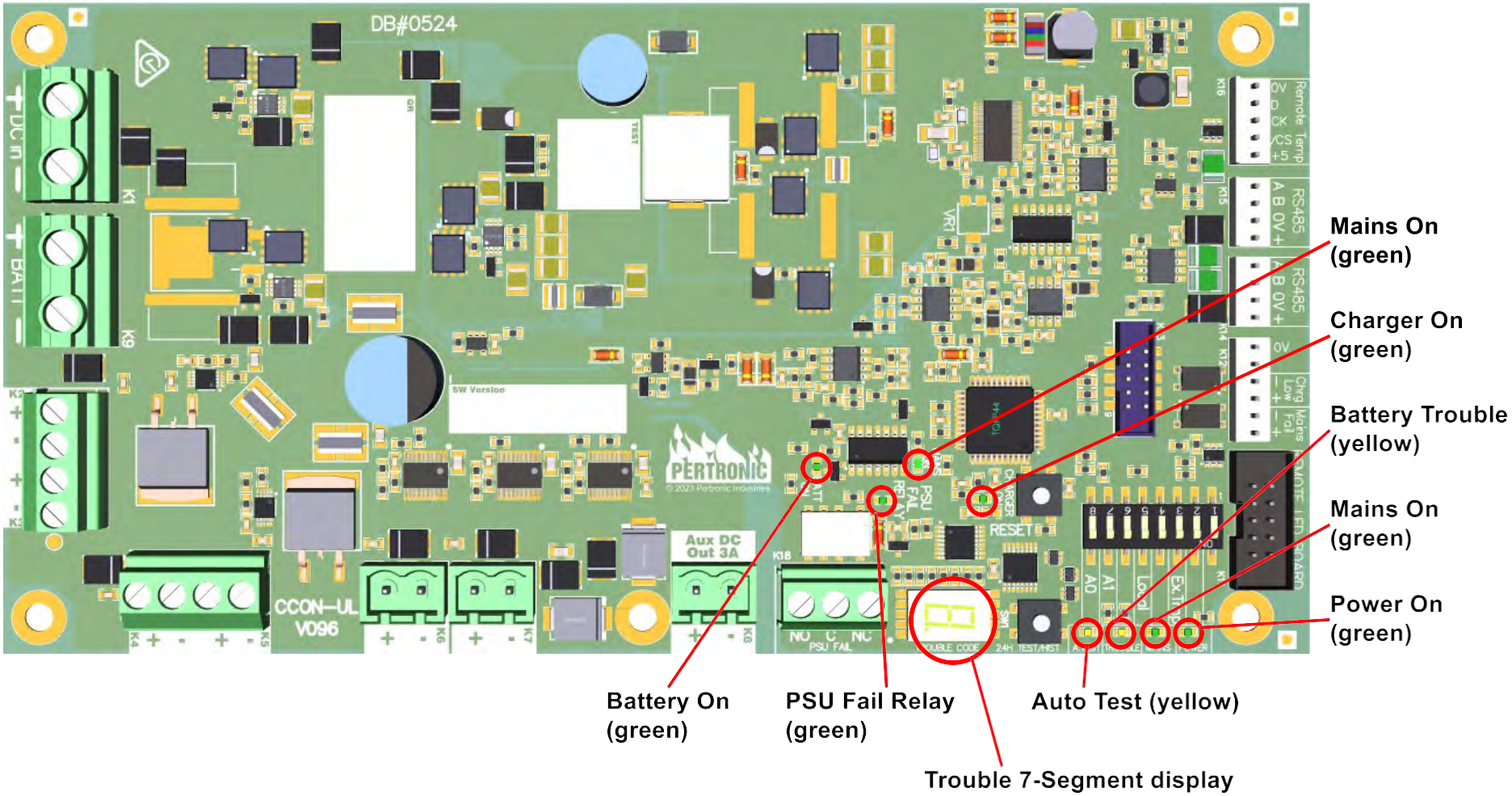

Figure 19-19: Charger Controller Board LEDs

19.4.3 Charger Controller Field Wiring

Connector Designator	Connector Description	Connector Header/ Plug	PCB labelling	Input/ Output	Protocol/ Rating/ Signaling Type	Wiring size range (AWG) Solid/ (Stranded)	Supervised	Power Limited	Output: Max Frequency Max Current Max Voltage
K1	DC IN		DC In + -	DC IN		12-22/(12-22)	Not intended for Field Wiring	Not power limited	Not intended for Field Wiring
K2	DC OUT 1		K2 + -	OUT		12-22/(12-22)	Not intended for Field Wiring	Not power limited	Max 6.9A. Depending on PSU
K3	DC OUT 1		K3 + -	OUT		12-22/(12-22)	Not intended for Field Wiring	Not power limited	Max 6.9A. Depending on PSU
K4	DC OUT 2		K4 + -	OUT		12-22/(12-22)	Not intended for Field Wiring	Not power limited	Max 6.9A. Depending on PSU
K5	DC OUT 2		K5 + -	OUT		12-22/(12-22)	Not intended for Field Wiring	Not power limited	Max 6.9A. Depending on PSU
K6	DC OUT 3		K6 + -	OUT		12-22/(12-22)	Not intended for Field Wiring	Power limited	3.5A
K7	DC OUT 4		K7 + -	OUT		12-22/(12-22)	Not intended for Field Wiring	Power limited	3.5A
K8/Plug8	DC OUT 5	XCFR2 FW1/FW2	Aux Power 3A K8 + -	OUT		12-22/(12-22)	Class D. Ground fault only detected	Power limited	Special Application 27.5V DC, 3.0A

K9	Battery		BATT + -	IN		12-22/(12-22)	Not intended for Field Wiring	Not power limited	Max 2.9A for CCON5-UL Max 4.7A for CCON7-UL
K11	Remote LED		Remote LED Board	OUT			Not intended for Field Wiring	Power Limited	
K12	Low Charge/ Mains Failure		0v ChrgLow - + Mains Fail +	OUT		15-25/(15-25)	Not intended for Field Wiring	Not power limited	
K13	ICD Interface			I/O		Not intended for Field Wiring		Power limited	
K14	RS-485		RS85 A B 0v +	I/O		15-25/(15-25)	Not intended for Field Wiring	Power limited	
K15	RS-485		RS485 A B 0v +	I/O		15-25/(15-25)	Not intended for Field Wiring	Power limited	
K16	Remote Temperature		Remote Temp 0v D CK /CS +5	IN			Not intended for Field Wiring	Power limited	
K18	PSU Fail Relay	XCFR2 FW2	NO C NC PSU Fail	OUT	Common, 2A, 30 VDC, resistive	12-26/(12-26)	Not intended for Field Wiring	Not power limited	N/A

Table 19-7: Charger Controller Field Wiring

19.5 AC Power Termination Board

19.5.1 AC Power Termination Board Connectors

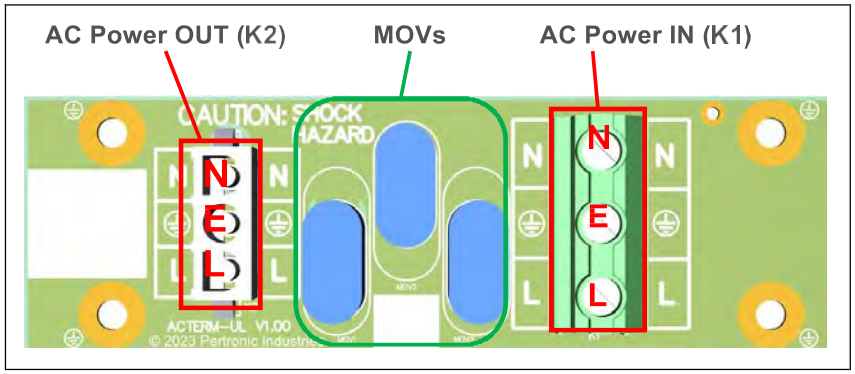

Figure 19-20: AC Power Termination Board Connectors

19.5.2 AC Power Termination Field Wiring

Connectors								
Designator	**Description**	**Connector labelling**	**Input/Output**	**Protocol/Rating / Signaling Type**	**Wiring size range (AWG) Solid/ (Stranded)**	**Supervised**	**Power Limited**	**Output: Max Frequency Max Current Max Voltage**
K1	AC Power In	N, E, L	Power In, AC Ground		Use only 14 AWG copper and 15A circuit breaker		Non power limited	
K2	AC Power Out	N, E, L	Power Out, AC Ground		14 AWG copper		Non power limited	Not intended for field wiring

Table 19-8: AC Power Termination board Field Wiring Data

19.6 F220 Panel Power and System Wiring

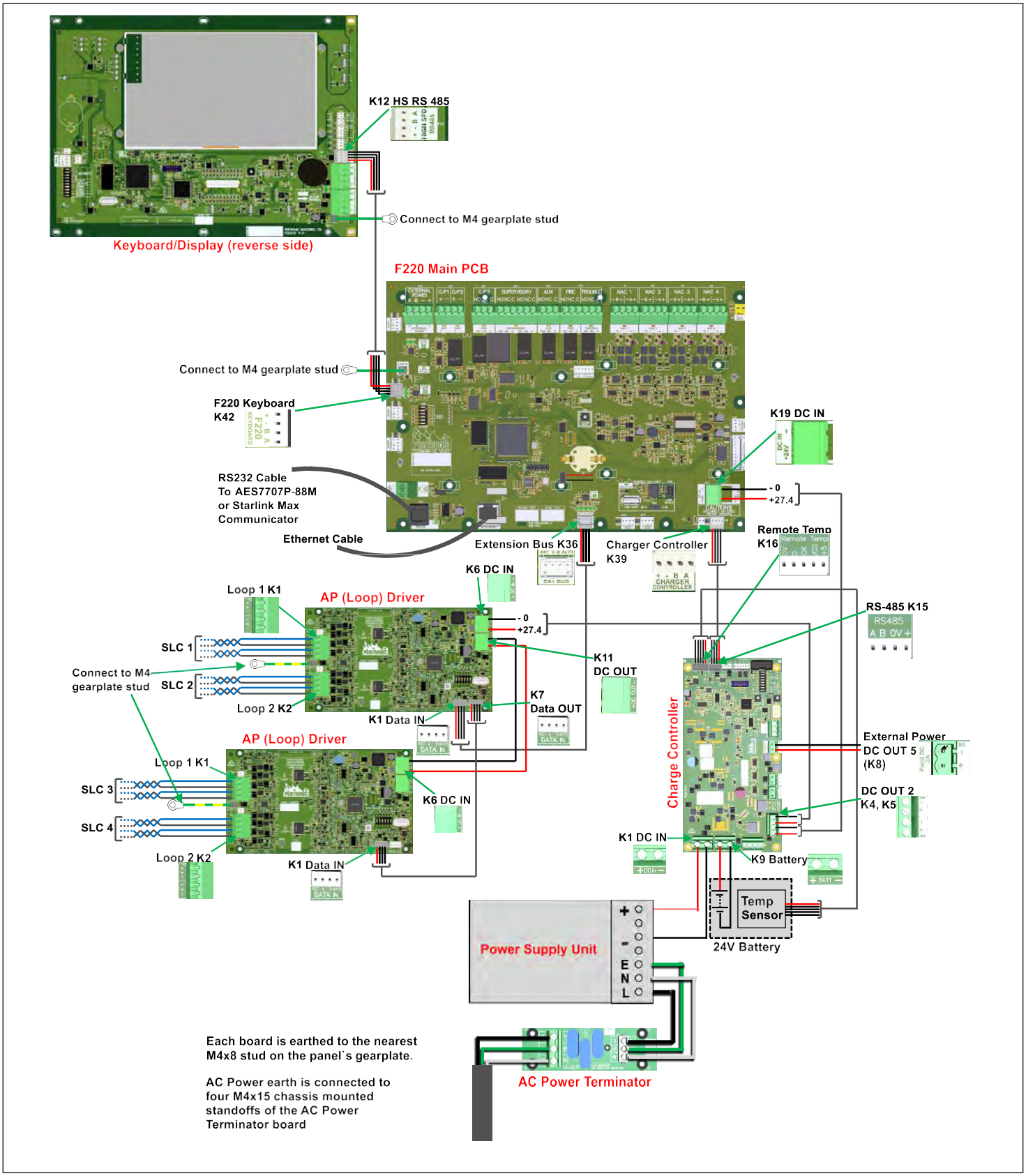

Figure 19-21: F220 Panel Power and System wiring diagram

20. F220 NET2 NETWORK

20.1 Overview

With the Pertronic Net2 Network, multiple F220 Fire Panels, and Net2 Remote Annunciators can be connected into a single, isolated, supervised, fault-tolerant, Class X system.

The system supports up to 160 Net2Cards (nodes) and each Net2Card can be configured to interface to an F220 Fire Panel, a Modbus device, a Printer Pager, or a Digital Communicator.

The network can be constructed using twisted pair cable (UTP) or optical fiber (either single- or multi-mode).

The maximum delay for an alarm activated on one panel to propagate to other F220 panels and annunciators in the network when the 160 Net2Cards are connected, is less than 10 seconds.

20.2 Introduction

The Pertronic NET2 Network System can connect up to 160 Pertronic NET2CARD cards using a two-wire high-speed RS485 data communications in a bi-directional ring network architecture. The network is tolerant to a single break, or short-circuit, anywhere in the communication loop with no loss of functionality when it is wired in a ring topology.

Each card has separate input and output ports, so each segment of the communication network operates independently of the others. Each segment can be up to 1km in length. The communication data is duplicated and carried in both directions around the network. The NET2CARD intended to receive the data will discard any duplicated data it receives. If any segment fails, the remainder of the network continues to operate so that full communication is maintained.

There is also provision for an optical fiber interface so that part or all the data communication network may be implemented using optical fiber.

The network cards can stand alone or have connection to an F220 Alarm Panel (See the front page for compatible firmware versions). Each network card can also directly support up to 8 Net2 Full Function Annunciators devices.

Every NET2 Network System must have at least one NET2 Full Function Annunciator (NET2-FFANN) connected to one of the NET2CARD cards. The Net2 Full Function Annunciator allows control and observation of operations across all of the F220 Alarm Panels in the network.

Networking of panels also provides for coordinated responses for sites that require multiple alarm panels. Events at one panel can be mapped to other panels to trigger other events or responses. For example, a fire alarm on one panel can trigger evacuation on the other panels.

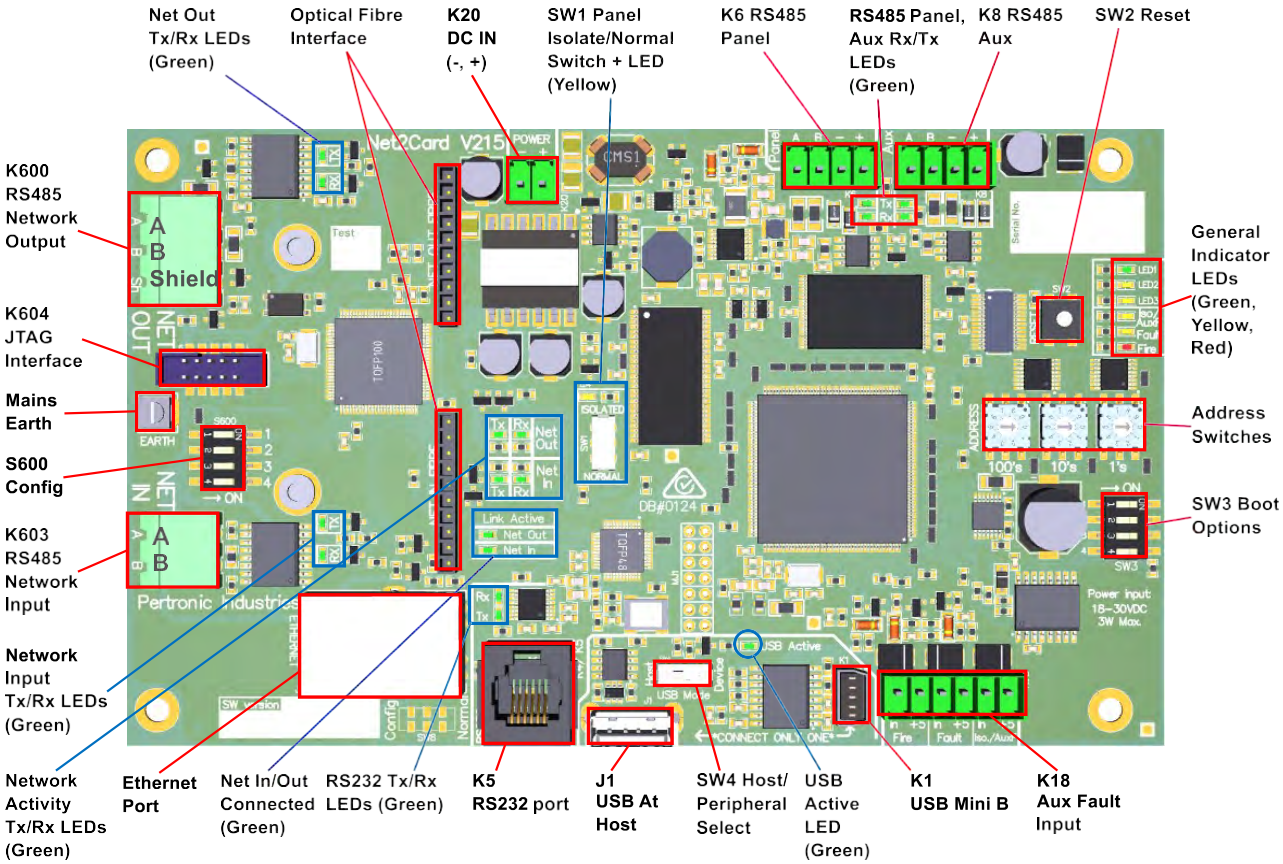

Figure 20-1: NET2CARD Layout

20.3 NET2 Architecture

20.3.1 RS485 Cable

The Pertronic NET2 network is implemented as an RS485 two wire bi-directional ring or single trunk architecture. Each NET2CARD has independent network input and network output ports. The output port of one card connects only to the input port of the next card in daisy chain fashion and the last card output connects only to the first card input to close the circle when configured as a ring.

Each wired segment in the trunk or ring is a point-to-point connection, no spurs are allowed.

The order of connection of NET2CARDs within the trunk or ring is not important as each card will receive messages with an address matching its own and pass on all other messages. Each RS-485 segment must be wired with twisted-pair cable.

Both the NET2CARD input and output ports can transmit and receive data on the connected network segments. When a NET2CARD transmits a message to another NET2CARD, copies of the message are sent in both directions when configured in a ring. All going well, the recipient will receive both copies of the message and the second copy will be ignored. If one segment of the ring is open, or short, circuited, at least one copy of the message will get to the recipient. In the ring configuration, the broken segment will produce a NET2CARD network output port trouble and a NET2CARD network input port trouble from the respective ends of the segment. This makes the ring configuration more robust than the trunk configuration by being redundant.

Within the network there is no network master since all the NET2CARDs operate as peers. On each network segment the data communication is managed by the output port of the connected NET2CARD.

This management buffers messages for transmission on a segment when transmission/reception of a message is already in progress. This management process avoids collisions between messages traveling in opposite directions around the ring.

If a network segment is incorrectly wired by transposing the input and output ports of one NET2CARD, there will be a network output port trouble, a network input port trouble, and a missing NET2CARD trouble reported. While the NET2CARD network ports can both transmit and receive, the management of the connected segment stays with the output port. Data connection will be lost if a NET2CARD output is connected to another NET2CARD output or a NET2CARD input is connected to another NET2CARD input.

20.3.2 Fiber Optic Cable

The NET2CARD also has provision for two optical fiber interfaces, one for the network output port and one for the network input port. Fitting the optical fiber interface for the network output port will disable the RS485 network output port. Similarly, fitting the optical fiber interface for the network input port will disable the RS485 network input port. Each optical fiber interface has two fibers, one dedicated to each direction of data travel. Data can only go in one direction in each optical fiber (whereas for RS485, signaling can go in either direction on one wire pair). Both fibers together allow full duplex communication on the optical segment. Optical fiber can be used on one or more segments of the network and the optical fiber segment length can be up to 20km (for Single Mode fiber). For installations subject to severe electrical noise, optical fiber or shielded cable is recommended.

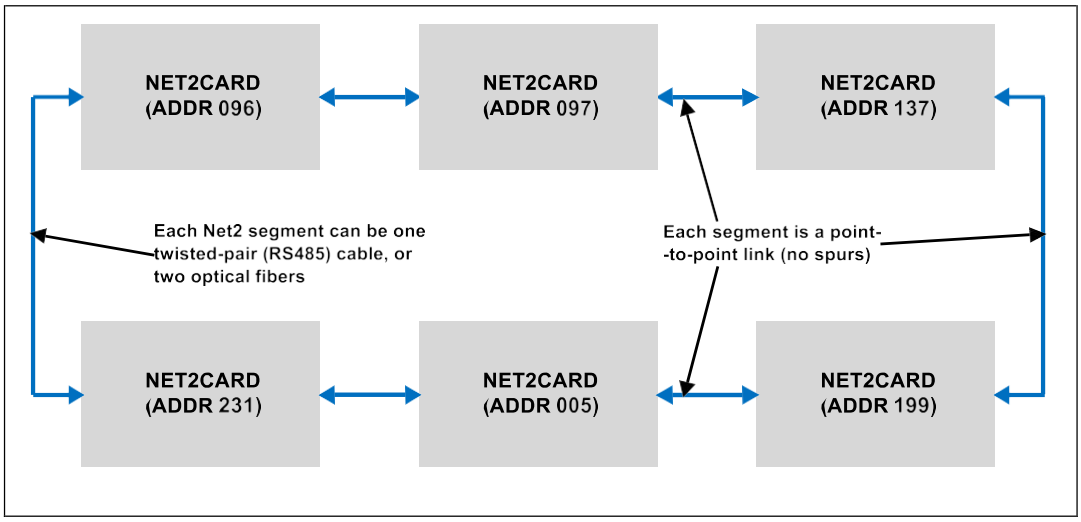

Figure 20-2: NET2 Network Topology (Ring Configuration)

20.3.3 Network Configuration

Every NET2CARD in a network requires a unique address so that messages can be directly addressed to any NET2CARD. The valid address range is from 001 through to 255, and up to 160 NET2CARDs may be connected in a network. Within the network the NET2CARD addresses can be in any order and addresses can be chosen from anywhere within the valid address range. The NET2CARD network address is set in hardware by three rotary selector switches on the card, see Figure 20-23, this is the only hardware configuration required.

All the remaining NET2CARD configuration must be set up using the Pertronic FireUtils application and downloaded into the NET2CARD. The same configuration file must be loaded on to every NET2CARD on a network, the NET2CARD uses its hardware address to select the parts of the configuration that are

relevant to it. This means that all the NET2CARDs in a network will have the same stored configuration, but each card will use only its part of that configuration.

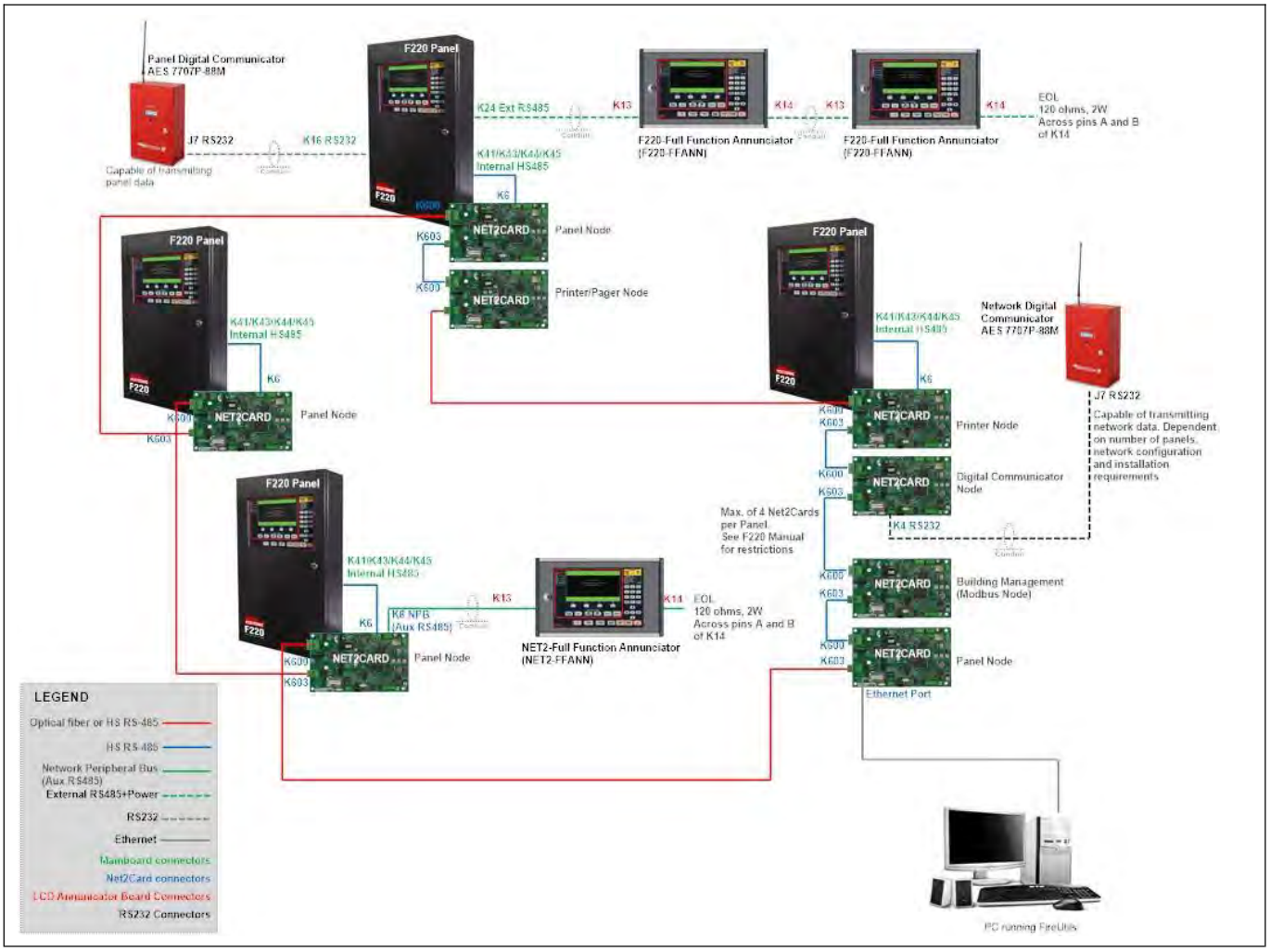

Figure 20-3: NET2CARD Network and Connection Options

20.4 NET2CARD Connections

The NET2CARD is connected to a network and may have other devices attached. If no F220 panel is attached, the NET2CARD must be powered from a separate power supply.

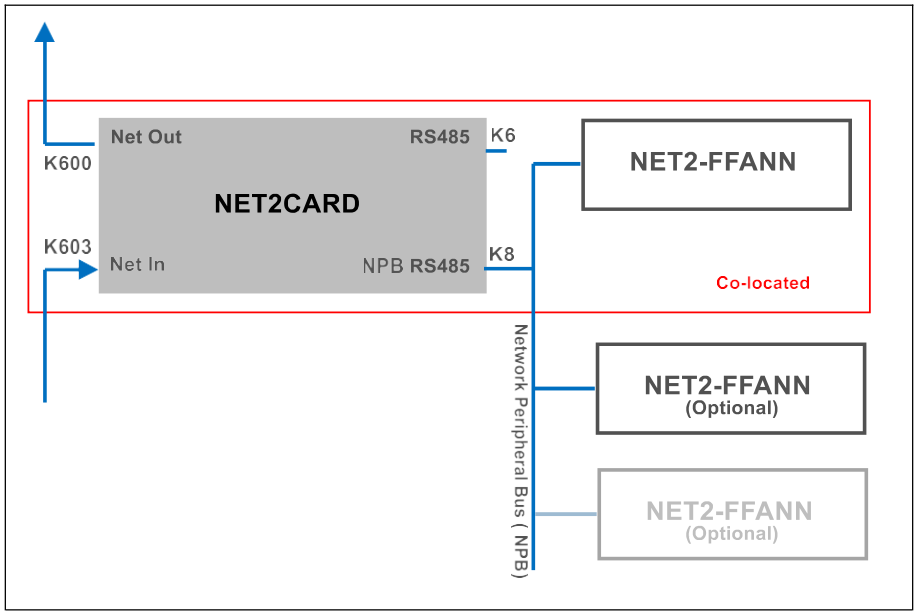

Figure 20-4: NET2CARD with NET2-FFANN as the Central Station Interface

When a NET2-Full Function Annunciator is used as a Central Station Interface, it can be housed (or co-located) in the same cabinet as the NET2CARD to which it is connected.

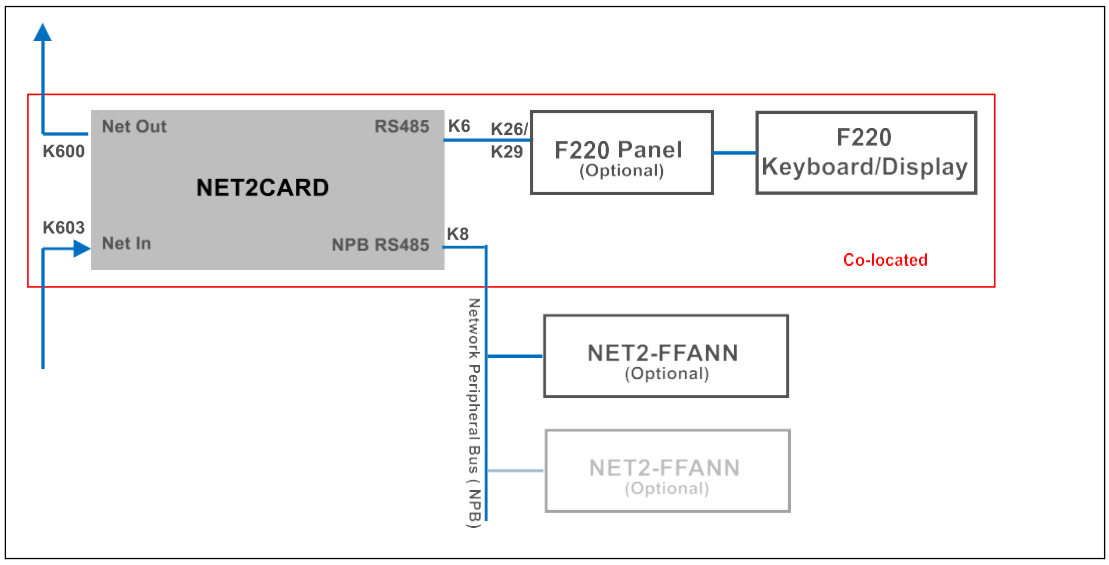

Figure 20-5: NET2CARD located in the F220 Panel's Cabinet

When an F220 panel is connected to a NET2CARD, it can be housed, or co-located, in the panel's cabinet.

If a NET2CARD is not assigned to a F220 Panel, it can be configured as an interface to one, and only one of the following:

- Digital Communicator,
- Building Management System (BMS),
- Printer/Pager, or
- Pertronic's FireMap application.

If further interfaces are required, additional NET2CARDs can be added to the network. Multiple NET2CARDs in a network can be assigned an interface to provide connection redundancy.

20.4.2 RS485 Link Connection

Each RS485 link in the NET2 network is from the Network Output connector of one NET2CARD to the Network Input connector of the next NET2CARD. Each link is a point-to-point RS485 connection with no spurs. Termination resistors are fitted internally on each card at each end of the link, no external termination resistors are required. The link operates at 425 kbits/s, in half duplex mode.

The Network Input connector, the Network Output connector and the remainder of the NET2CARD are all galvanically isolated from each other, this is to reduce sensitivity to ground noise, node ground voltage offsets and minimize the effect of ground troubles.

The network input connector has connection for the RS485 wire pair, see Figure 20-6. There are two LEDs associated with this connector that indicate transmit and receive activity on the connector, see Figure 20-8. The LEDs show data activity on the link, the normal link management data activity will make them emit continuously at a low but easily visible level, this is a good initial indicator of correct link operation but the Network Trouble LEDs should be checked, see Figure 20-11.

The network output connector has connection for the RS485 wire pair plus a shield, see Figure 20-7. There are two LEDs associated with this connector that indicate transmit and receive activity on the connector see Figure 20-9. The LEDs show data activity on the link, the normal link, management data activity will make them emit continuously at a low but easily visible level, this is a good initial indicator of correct link operation but the Network Trouble LEDs should be checked, Figure 20-11.

The Network Activity LEDs, see Figure 20-10, show transmit and receive messaging activity over the Net Out and Net In connectors. These LEDs will flicker on when messaging data is being transferred. Even in a system normal state with no events, messaging activity can be expected every few seconds.

The Link Active LEDs are normally lit and are dark when there is a trouble detected on the wiring connected to the associated connector, see Figure 20-11. The network wiring troubles could be open connections or short circuits or other troubles.

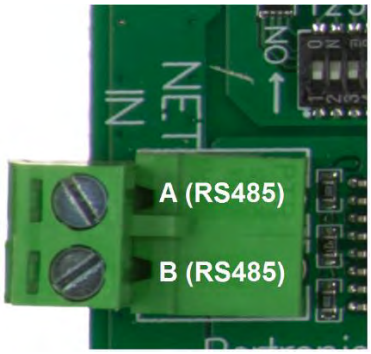

Figure 20-6: Network Input Connector (K603)

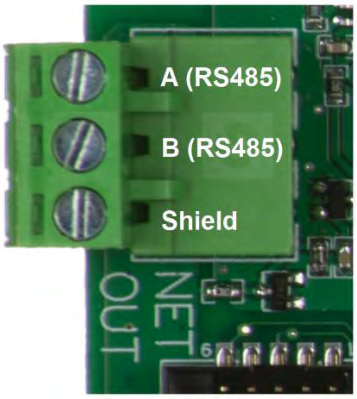

Figure 20-7: Network Output Connector (K600)

Pin	Function
1	A (RS485)
2	B (RS485)

Table 20-1: Network Input Connector Pinning

Pin	Function
1	A (RS485)
2	B (RS485)
3	Shield

Table 20-2: Network Output Connector Pinning

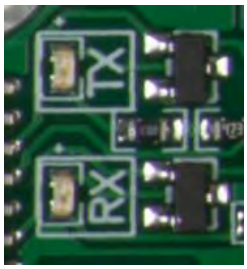

Figure 20-8: Network Input Connector LEDs

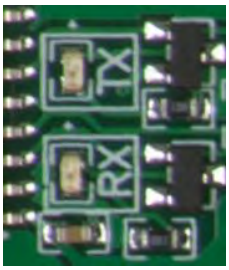

Figure 20-9: Network Output Connector LEDs

Figure 20-10: Network Activity LEDs

Figure 20-11: Network Trouble LEDs

20.4.3 Optical Fiber Link Connection

The NET2CARD wired link connections may be replaced by optical fiber using plug in optical interface (FibNet) modules. Inserting the modules will disable the wired link connections.

- Inserting a FibNet module into socket MJ600 (NETOUT fiber interface) will disable the wired RS485 port NET OUT on connector K600 and the NETOUT activity LEDS will be disabled.

- Inserting a FibNet module into socket MJ601 (NETIN fiber interface) will disable the wired RS485 port NET IN on connector K603 and the NETIN activity LEDs will be disabled.

NOTE:

The FibNet modules must not be plugged in while the NETCARD is powered. The NET2CARD determines its hardware makeup only at bootup. When 'hot plugged', the FibNet modules will not be recognized until the next NET2CARD bootup.

The Network Activity LEDs (Figure 20-10) will function normally. Data is transferred optically at 230.4 kbits/s.

Either one or both of the optical fiber modules may be fitted on the NET2CARD. Each module has two fiber interface ports, one transmit (TX) and one receive (RX), so that full duplex data can be carried over the fiber interface. The transmit and receive ports from one fiber interface must be crossed over and connected respectively to the receive and transmit ports of the fiber interface at the other end of the link, see Fig 20.12

Any one or all of the links in a NET2CARD network may be replaced with optical fibers. The NET OUT port of one NET2CARD must still be connected to the NET IN port of the next NET2CARD in the network.

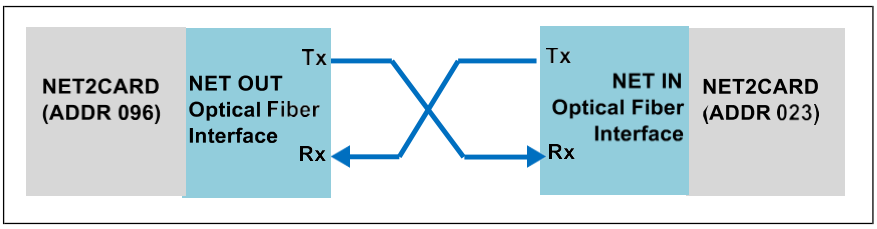

Figure 20-12: Network optical link

The optical fiber link can be up to 2km in length for multimode fiber or 20 km in length for single-mode fiber.

The installer must test each optical fiber connection to make sure the fiber attenuation stays within the link budget. See Table 20-3

	FibNet-MMF	FibNet-SMF
Fiber	Multi-mode	Single-Mode
	50/125um, 62.5/125um	9/125um
Maximum Distance	2km	20km
Wavelength	1310nm (1260nm - 1360nm)	
Tx Power	-3dBm...-9dBm	
Rx Sensitivity	-16dBm	-20dBm
Rx Overload	-3dBm (do not exceed this level)	
Link budget	7dB	11dB

Table 20-3: Optical Fiber Interface Performance

Figure 20-13: Optical Fiber Interface Modules Installed

20.4.4 F220 Panel Connection

An F220 alarm panel can be connected to the NET2CARD on RS485 Panel connector K6 (Figure 20-14); this becomes the network connection for the F220 panel. This connection is point to point only, no spurs are allowed, and termination resistors are already fitted on the NET2CARD and F220. The NET2CARD may be powered from the connected F220 panel or from 24Vdc connected to connector K20 (Figure 20-16). The NET2CARD can operate without the F220 panel provided it has a power supply. If the NET2CARD is configured to have an F220 connected, a trouble indication will be generated if the F220 panel is not connected.

Beside both the connectors K6 and K4, the TX and RX LEDs will normally be dark and will flicker when data is being transferred.

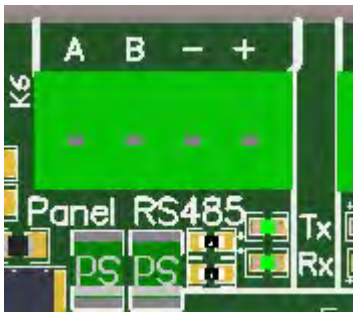

Figure 20-14: RS485 Panel (K6)

Pin	Function
1	+ Power Input
2	- Power Input
3	B (RS485)
4	A (RS485)

Table 20-4: RS485 Panel (K6) Pinning

RS485 Panel port parameters: 9 bit, half duplex, 115.2 kbits/s, RS485, non-isolated interface.

The connected panel can be isolated from the network for test or maintenance purposes by setting switch SW1 to “Isolate”, see Figure 20-15. When the panel is isolated by SW1:

- The yellow LED LD4 “ISOLATED” should be lit.
- The connected alarm panel should show a disablement message.

Other loop communications are not affected and any NET2CARD connected peripherals, such as Annunciators, are not affected.

The switch should be restored to “NORMAL”, the slider downward as in Figure 20-15, for normal panel operation.

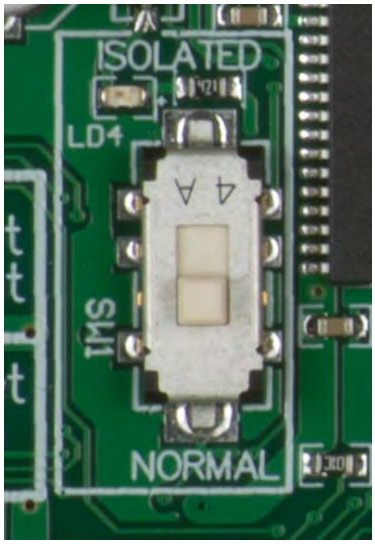

Figure 20-15: Panel Isolate Switch (SW1)

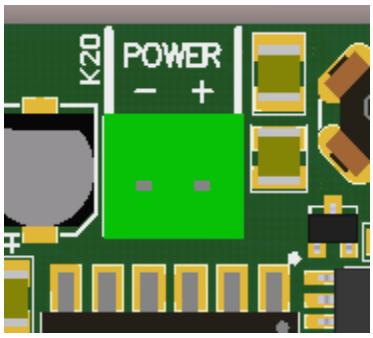

Figure 20-16: Power Connector (K20)

20.4.5 Aux RS485 or Network Peripheral Bus (Aux RS485/NPB)

The Aux RS485, or Network Peripheral Bus port, in Figure 20-17, is an RS485 interface for connection of network control, display and other devices. These must be connected in daisy chain fashion with no spurs and a resistor termination at the remote end. There is already an internal resistor termination in the NET2CARD. Any combination of up to 8 devices is allowed on this port. The valid hardware address range for these devices is 1 through to 16, addressing must start at 1 and be sequential with no gaps. The devices can be physically connected in any order on the NPB/Aux RS485 wiring.

About 175mA at 24Vdc is available on this interface for powering peripherals which is enough to supply at least one NET2 Full Function Annunciator. If there are more devices connected to the NPB port, a separate power supply is required. For long NPB cable runs, the power supply voltage drop along the cable needs to be considered.

Besides the NPB/Aux RS485 port connector, the TX and RX LEDs will normally be dark and will flicker when data is being transferred.

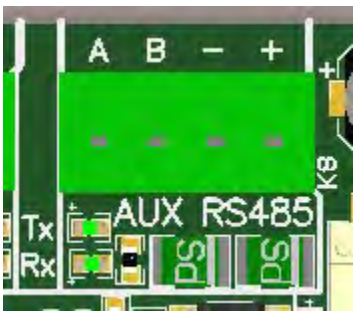

Figure 20-17: Aux RS485 (K8)

Pin	Function
1	+ Power Output
2	- Power Output
3	B (RS485)
4	A (RS485)

Table 20-5: Annunciator Aux RS485 (K8) Pinning

NPB/Aux RS485 port parameters: 9 bit, half duplex, 115.2 kbits/s, RS485, non-isolated interface.

See Section 20.9 NET2CARD Peripherals for the types of devices that can be attached to the NPB/Aux RS485 bus.

20.4.6 USB-A Host Port

The USB port is for NET2CARD firmware upgrades and backing up the network configuration by using a USB memory stick.

The NET2CARD has one USB port for host operation on USB-A connector J1.

- See Section 20.6.4 updating Net2Card Firmware
- The switch SW4, adjacent to the USB-A connector J1, must always be set to the host position (slider to the left, see Figure 20-18).

The USB-mini B slave port, connector K1, is reserved for factory/manufacturing use.

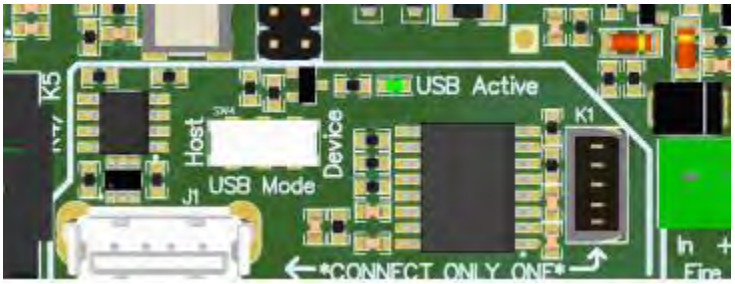

Figure 20-18: USB Interface

20.4.7 Ethernet Interface

The RJ45 Ethernet interface can be used for configuring the network by connecting to a PC running the Pertronic FireUtils® application software. See Section 20.5.5 Uploading a Network Configuration.

The RJ45 Ethernet interface can also be used for connecting via a network to a PC running the Firemap application. If used for connecting to FireMap, the NET2CARD cannot have any connected network displays or a connected F220 panel.

FireMap communication with the NET2CARD network will be disrupted when a network configuration upload is in progress.

The MAC address for the Ethernet port is on the connector.

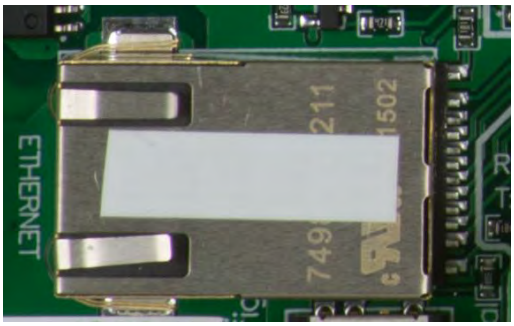

Figure 20-19: Ethernet Connector

20.4.8 Aux Trouble Input

The Aux Trouble input is for monitoring equipment that can generate trouble indications. For example, the NET2CARD may be powered by local power supply with its trouble output wired to the NET2CARD Aux Iso/AuxF input.

The input can be operated using dry relay contacts. Open circuit is normal, a short circuit input creates a trouble indication.

The trouble indication is displayed on all network connected panels and on any ANNUNCIATORs that have the NET2CARD indicating the trouble within their scope (of view).

Trouble Input	Connector K18	Associated LED
Aux Trouble (Fault/Isolate) Normal – open circuit Trouble – short circuit	Pin 5 Aux Fault/Isolate (in) Pin 6 Aux Fault/Isolate (+5)	LED4 (yellow) “Iso/AuxF”

Table 20-6: Aux Trouble Input Behavior

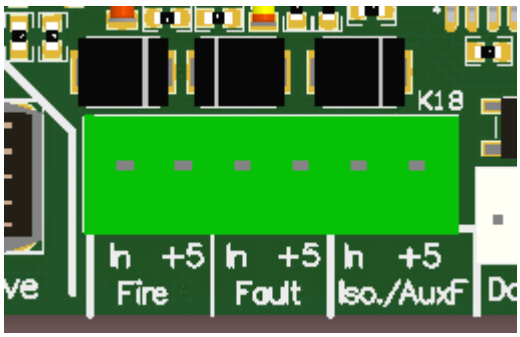

Figure 20-20: Connector K18

20.4.9 Mains Ground

The ground connection point (connector K602) is used as a reference for detecting ground troubles on the RS485 NET OUT port on connector K600.

This must be left connected at all times.

Figure 20-21: Earth/Ground connection point (K602)

20.4.10 RS232 Port

A non-isolated RS-232 port is provided for connection to the Fire Panel's Digital Communicator. The port operates at a default speed of 115,200 b/s (1 start bit, 8 data bits, 1 stop bit).

Panel RS-232	Connector K5	Associated LEDs
Serial communications port	Pin 1 Ground Pin 2 Transmit (output) Pin 3 Receive (input)	Rx, Tx adjacent to K5

Table 20-7: RS-232 connection

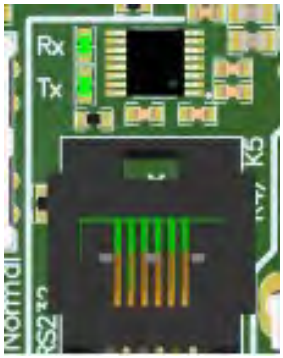

Figure 20-22: Panel RS-232 (K5)

Pin	Function
1	Ground
2	Transmit (output)
3	Receive (input)

Table 20-8: Panel RS-232 (K5) Pinning

NOTE:

The NET2CARD's RS-232 port is not isolated and as a result, if connected to a third-party product, can cause the Panel to signal a ground trouble. To mitigate this issue, either

1. Power the NET2CARD from a separate isolated 24Vdc power supply, such as a dc-dc converter.
2. Insert an isolated RS-232 to RS-232, or isolated RS-232 to USB converter, between the 3rd part device and the NET2CARD's RS-232 connector. Ensure the adapter isolates both the data and power lines. Power for the adapter may have to be supplied from a separate external power supply (24Vdc) or floating power pack. Maximum data rate 115200 bps.

20.4.11 Unsupported Connections

The connections in the table below are not supported in the firmware versions specified in the front of this manual.

Fire and Trouble Inputs	Connector K18	Associated LED
Fire indication	Pin 1 Fire (in) Pin 2 Fire (+5)	LED6 (red) "Fire"

Trouble indication	Pin 3 Trouble (in) Pin 4 Trouble (+5)	LED5 (yellow) “Trouble”

Table 20-9: Fire and Trouble unsupported connection

20.5 NET2CARD Setup

20.5.1 NET2CARD hardware setup

The NET2CARD hardware address is set using three rotary switches. The range of valid addresses is 001 through to 255, any address outside this range is invalid. Any hardware address can only be used once in a network, duplicated or invalid addresses will cause trouble indications on the Annunciators and panel displays within the network. The NET2CARDS can be connected in any order on the network loop. Any setting or change of hardware address must be done with no power applied to the NET2CARD.

NET2CARD switch settings for ‘Normal’ operation. (For location of the switches on the NET2CARD PCB, refer to Figure 20-45: Net2Card PCB)

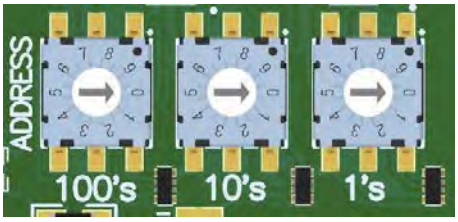

Figure 20-23: NET2CARD Hardware Address switches

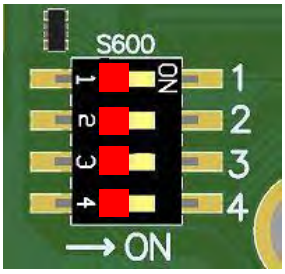

Figure 20-24: NET2CARD Switch S600

Setting: SW_1 off
SW_2 off
SW_3 off
SW_4 off

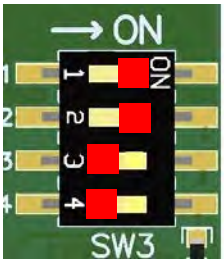

Figure 20-25: NET2CARD Boot Switch (SW3)

Setting: SW_1 on
SW_2 on
SW_3 off
SW_4 off

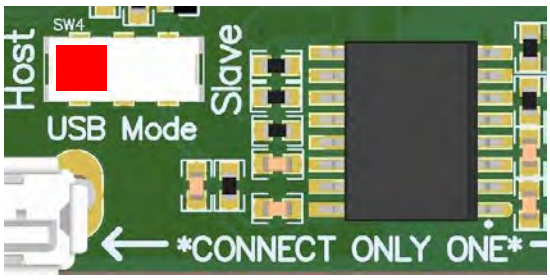

Figure 20-26: Host/Peripheral USB Switch (SW4)

Setting: ‘Host’

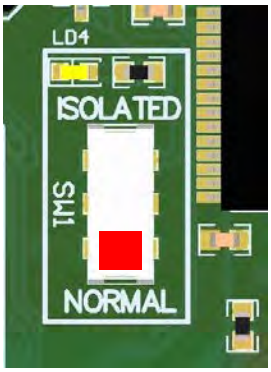

Figure 20-27: NET2CARD Panel Isolate Switch (SW1)

Setting: ‘Normal’

20.5.2 NET2CARD Configuration

The NET2CARD/network configuration can

- Only be prepared by using the FireUtils PC application.
- Only be uploaded by using the FireUtils PC application and connection of the PC Ethernet port to the NET2CARD. Any panel on the network that is connected to a NETCARD on the same network can also be completely configured from a single Ethernet connection to any of the NET2CARDS on the network.

FireUtils will create one configuration for the entire network. The same configuration will be uploaded, by FireUtils, into each NET2CARD in the network Each NET2CARD will use its own hardware address (see Figure 20-23: NET2CARD Hardware Address switches) to extract its own configuration information from the network configuration.

The configuration for the network will contain:

- The NET2CARD hardware addresses
- The number of Annunciators (if any) on each NET2CARD Network Peripheral Bus
- The connection, or not, of an F220 panel for each NET2CARD
- F220 configurations
- The signal mappings for the network

Configuration via the USB port is not supported.

20.5.3 FireUtils Configuration

Refer to the Pertronic Industries FireUtils application documentation for full details on using FireUtils for panel and network programming. An entire network configuration, for all nodes and panels in the network, can be created using the FireUtils application software without connection to the network. The entire network configuration can be uploaded to the network by connecting to the PC running the FireUtils application to one NET2CARD in that network.

20.5.4 Example: Configuring a 2 Panel, 3 Node Network using FireUtils

The example below describes the process of configuring a three node, two panel network which includes three annunciators; two attached to Net2Cards (Net2-FFANNs), and the third, a F220-FFANN, connected to a panel. See Figure 20-28.

20.5.4.1 Network Topology

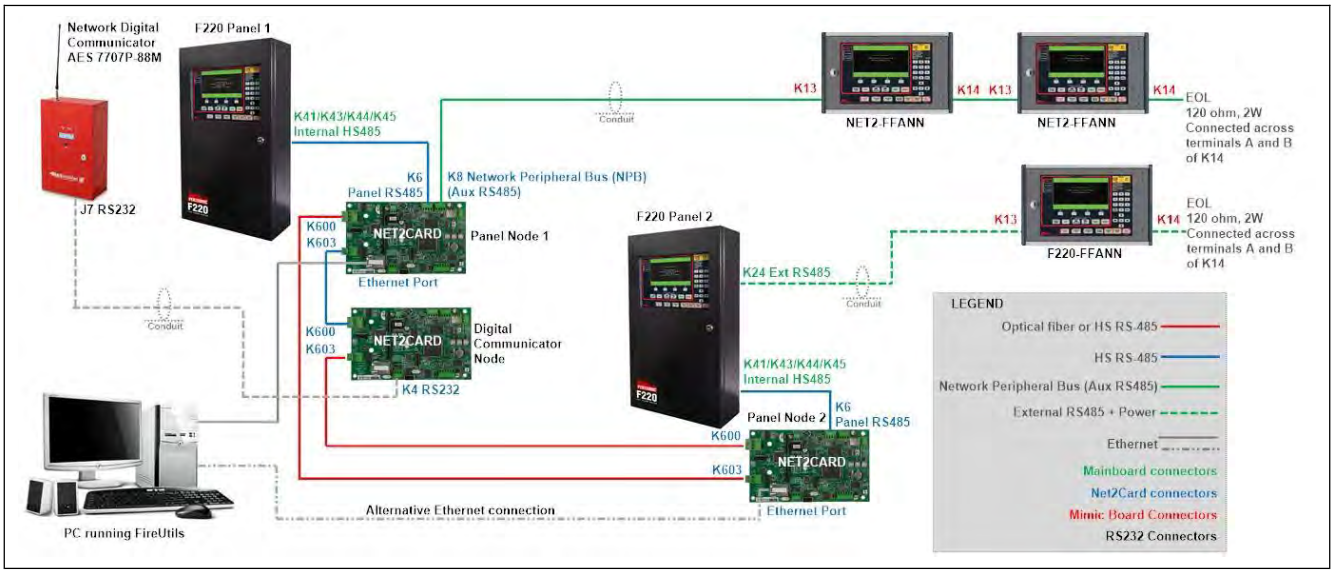

Figure 20-28: A Two Panel, Three Node Network

20.5.4.2 Setting up the Panels, and Full Function Annunciators

- With the Net2Cards mounted in both F220 Panels, connect K6 PANEL_RS485 on the two Panel Node Net2Cards to K44 INTERNAL_RS485 on the respective Panel's Mainboard. See Figure 20-28 and Figure 20-46.
- Connect power to Panel 1's Communicator Node Net2Card. For example, connect the power terminals of K6 RS485_PANEL, or K20 DC_IN, on the Net2Card to K11 DCOUT on a SLC Driver board (Figure 20-46) or to a spare DCOUT connector on the Charger Controller board.
- Connect K13 on one Net2-FFANN Full Function Annunciator to K8 AUX_RS485 (or NPB) on Panel 1's Net2Card and K14 on the Net2-FFANN to K13 on the other Net2-FFANN.
- Connect K13 of the F220-FFANN to K24 EXT_RS485 of panel 2's mainboard.
- Connect the A and B terminals on K14 on the F220-FFANN and the second Net2-FFANN to separate 120 ohm, 2W End of Line resistors (EOL-120-UL) as shown in Figure 20-28.
- When wiring the network connections, ensure that K600 RS485 NETOUT is connected to K603 RS485 NETIN on the next Net2Card to create a loop.
- To display all network events on both the F220 panel and on the Net2-FFANN peripherals, follow the firmware upload process in Section 20.9.15.3.
- To display panel events on the F220-FFANN, follow the firmware upload process in Section 7.2.

IMPORTANT NOTE:

1. F220 Annunciators (F220-FFANN) display data from the panel to which it is attached, as well as network troubles (e.g. missing nodes, cable faults). It cannot display network events, such as alarms, or control (e.g. Disable) other panels connected to the network.

   Use the firmware upload process for the display described in Section 7.2.

2. Net2 Annunciators (Net2-FFANN) display all events (alarms, troubles etc) and are capable of controlling (e.g. Disable) all panels connected to the network.

   Use the firmware upload process described in Section 20.9.15.3

3. Networked F220 Panels display all events (e.g. alarms, troubles etc) and can control (e.g. Disable, Silence NACs etc) other panels connected to the network.

   Use the firmware upload process described in Section 20.9.15.3.

20.5.4.3 Net2Card Hardware Setup

- The NET2CARD hardware address is set using three rotary switches.
- The range of valid addresses is 001 through to 255, any address outside this range is invalid.
- A hardware address can only be used once in a network. Duplicated or invalid addresses will cause trouble indications on Panel and Annunciator displays.
- The NET2CARDS can be connected in any order on the network loop. Any setting or change of hardware address must be done with no power applied to the NET2CARD

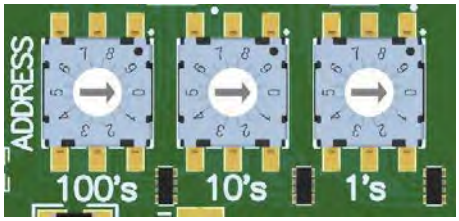

Figure 20-29: Net2Card Address Switches

20.5.4.4 Adding the Networked Components

- Open FireUtils
- In the Tool Bar, click on “New Project” to create a new Project (if required)

- Select and click “Add New F220 Configuration” in the Tool Bar.

- Repeat the step above to create a second F220 panel configuration.

- With “New Site” selected in the Component Tree, click “Add New Network Configuration” in the Tool Bar.

- With “Network” selected in the Component Tree, click on “Add New Network Node Configuration” in the Tool Bar.

- Repeat the above step again to create a second Network Node Configuration.

- Repeat the above step to create a third Network Node

Comment:

At this point in the configuration process, the three nodes are:

- Part of the network as the “Include in Config box” in the “Network Node Editor” is ticked by default (Refer to Section 20.5.4.5)
- Not assigned to a panel. The two F220’s are standalone and are not yet part of the network. Assigning nodes to panels is covered in Section 20.5.4.6.

The FireUtils Component Tree window should be:

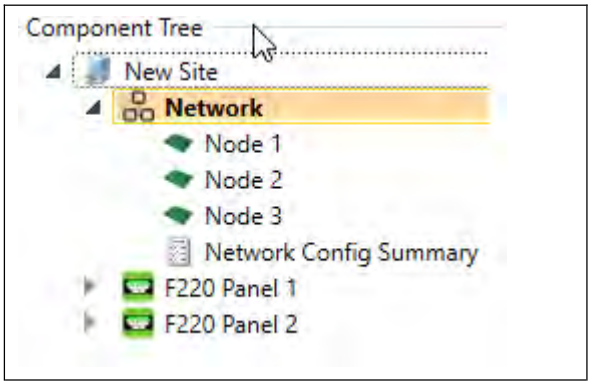

Figure 20-30: FireUtils' Component Tree

20.5.4.5 Configuring Nodes

- With Node 1 selected in the Component Tree, the 'Network Node Editor' should be open to the right of the Component Tree window
- Toward the top of the Network Node Editor window will be a checkbox labeled 'Include In Config' (Figure 20-31: Network Node Editor Red oval). This should normally be checked (ticked) so that the node will be included in the network configuration.
- Unchecking (no tick) the checkbox means the node will not be included in the network configuration. This feature is useful if a system is being progressively installed, it allows testing and verification of existing parts of the network without getting missing node errors.
- In the "General" sub-window is an address field (Figure 20-32 Green oval). The address must match the address on the NET2CARD for this node. Addresses will be assigned to the nodes sequentially as they are added to the component tree, but they can be easily changed by typing the new address. Addresses don't need to be sequential or adjacent to others. The network nodes can also be physically connected in any order within the network.
- At this stage, there is no "Assigned Panel" so this field will say "NONE" (Figure 20-32 Blue oval). Refer to Section 20.5.4.6 Configuring Panels for assigning panels to nodes.

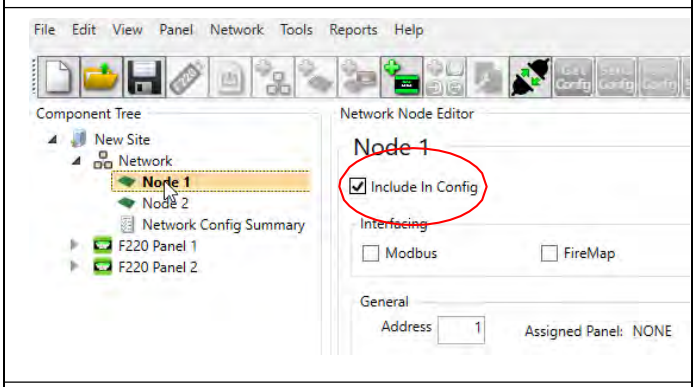

Figure 20-31: Network Node Editor

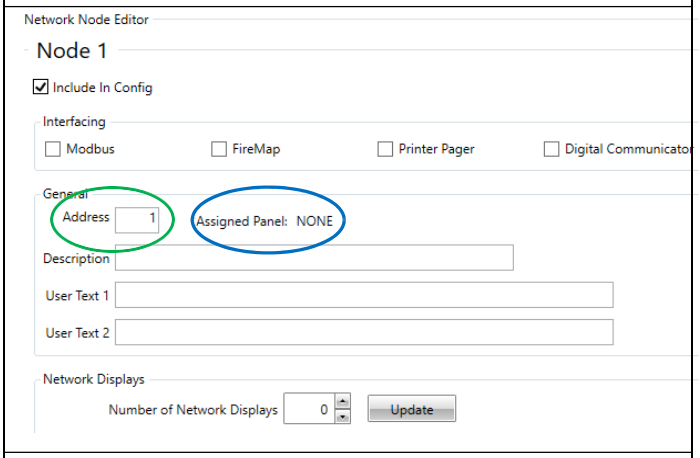

Figure 20-32: Network Node Editor

- The “Description” field can be edited simply by typing in text. This field is used to identify this node. Up to 31 characters can be placed in this field.

- The two “User Text” fields are for entering supplementary information, up to 39 characters may be entered in each of these fields. These fields are displayed on Annunciator devices attached to this node to provide information to users.

- The “Network Displays” sub window is for configuring the number of devices on the Network Peripheral Bus (Figure 20-33- Blue square). Any device connected to the Network Peripheral Bus must be included in the count.

- **NOTE:** The NPB bus is connector K8, labeled “Aux RS485”, on the NET2Card PCB.

- In this exercise there are 3x Full Function Annunciators; 2 connected to the NPB on Node 1 (NET2-FFANNs) and 1, a F220-FFANN, connected to Panel 2’s mainboard (K24 Ext RS485).

- In Node 1’s Network Node Editor, two can be entered in to the Network Displays field directly or by using the up/down buttons and then pressing the “Update” button (Figure 20-33)

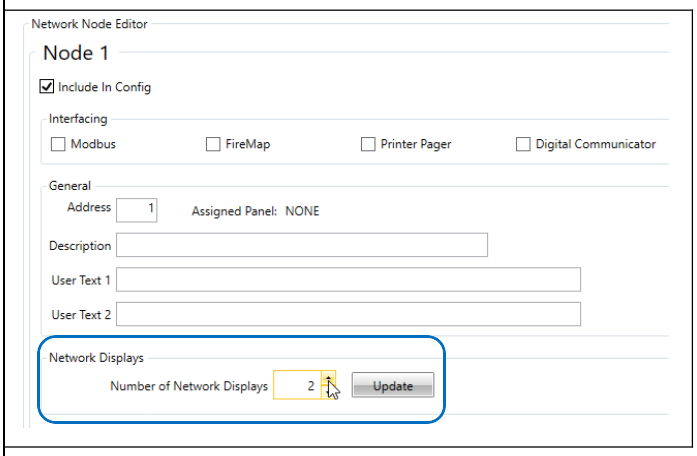

Figure 20-33: Configuring Network LCD Annunciators

NOTE: From zero up to 8 Network Displays are allowed on the Network Peripheral Bus. The address of each device must be in sequence, starting at 1, with no gaps.

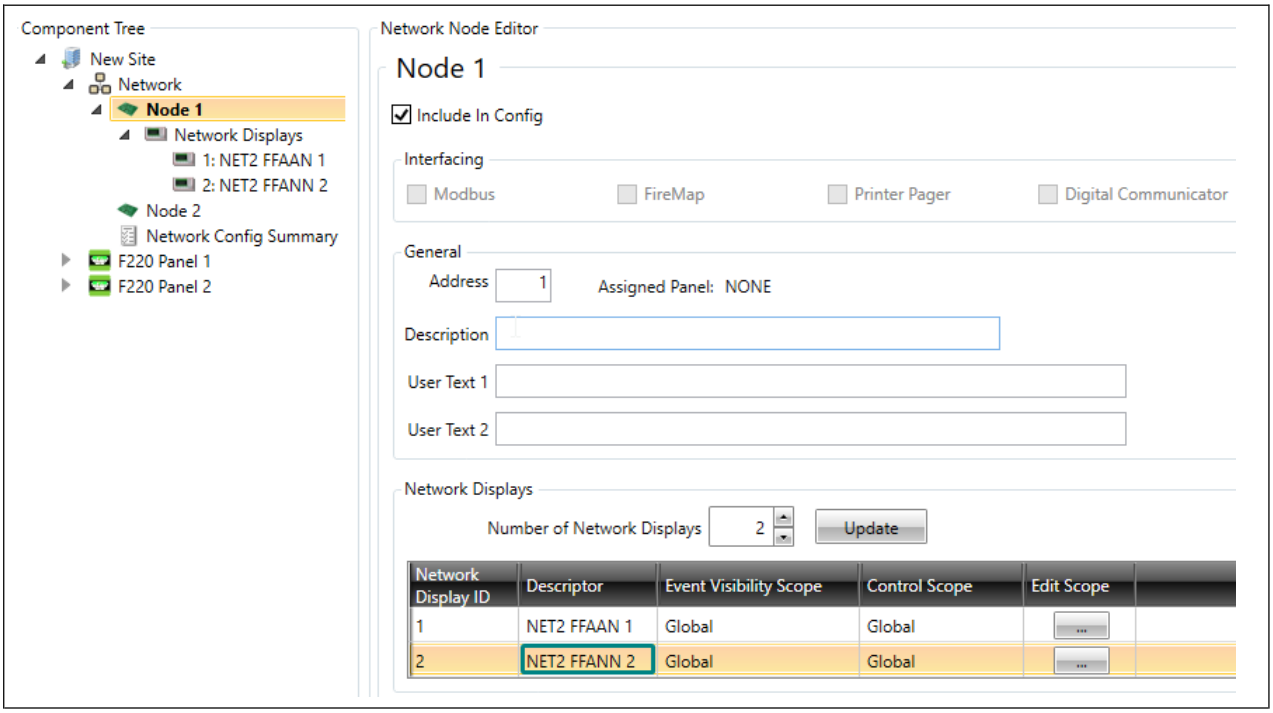

Figure 20-34: Adding Network Displays to Node 1

- Each Network Display can be given a description (up to 31 characters) that will be displayed on the Annunciator. Refer to Figure 20-34. The description for “NET2-FFANN 1” in the Displays sub window will be assigned to the Annunciator type device with address 1, and the “NET2-FFANN 2” description will be assigned to the Annunciator type device with address 2. The Annunciator type devices can be physically connected in any order on the Network Peripheral Bus.

20.5.4.6 Configuring Panels

- In the FireUtils Component Tree, right click on “Node 1” and in the menu select “Assign Existing Panel Configuration” (Figure 20-35)
- For this example, select from the list presented in the pop-up window “F220 Panel 1”, then click the ok button. The F220 Panel 1 should now have moved to be indented just underneath Node1.
- Now click on F220 Panel 1 in the Component Tree window. A “F220 Panel Editor” window should appear to the right.
- Click on the checkbox “Network Card”, (Figure 20-36) this is the only network setting required in the F220. The F220 panel still requires configuration for normal panel operation.

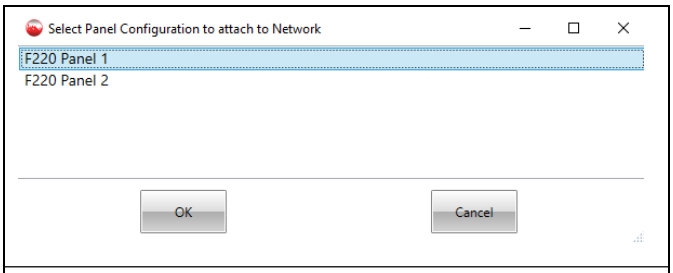

Figure 20-35: Assigning Panel 1 to Node 1

- Clicking on Node 1 in the Component Tree window will open the Network Node Editor on Node 1 and the “Assigned Panel” should now be “F220 Panel 1”.

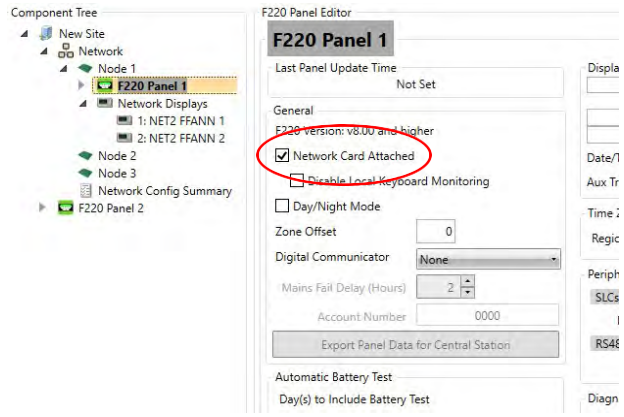

Figure 20-36: Connecting Panel 1 to the Network

- Follow the same process for assigning “F220 Panel 2” to Node 2.

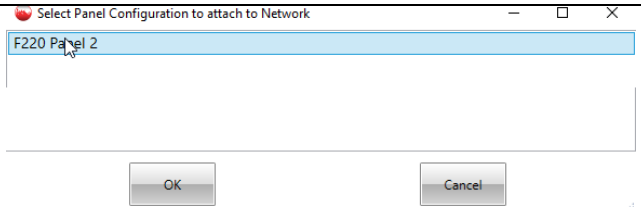

Figure 20-37: Assigning Panel 2 to Node 2

- The FireUtils display should now be:

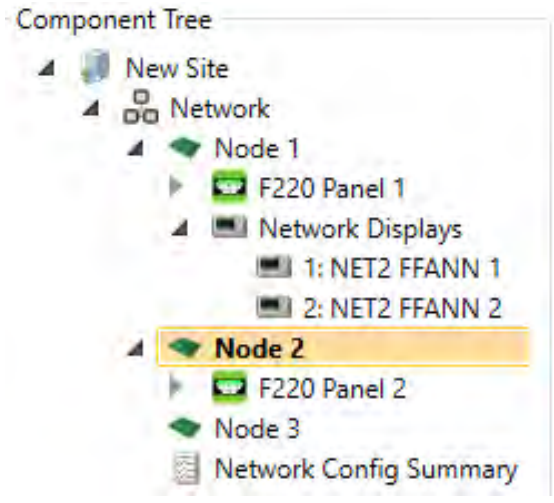

Figure 20-38: FireUtils' Component Tree

- In FireUtils' Component Tree, click on Node 3 and, in the "Network Node Editor", check the "Digital Communicator" tick box (Figure 20-39, red oval).

- Set the configuration parameters for the Digital Communicator in the "Digital Communicator Configuration" popup box (Figure 20-39, blue square), which event types will be reported (Fig Figure 20-39, green square), and the level of reporting detail (Figure 20-39, grey oval)

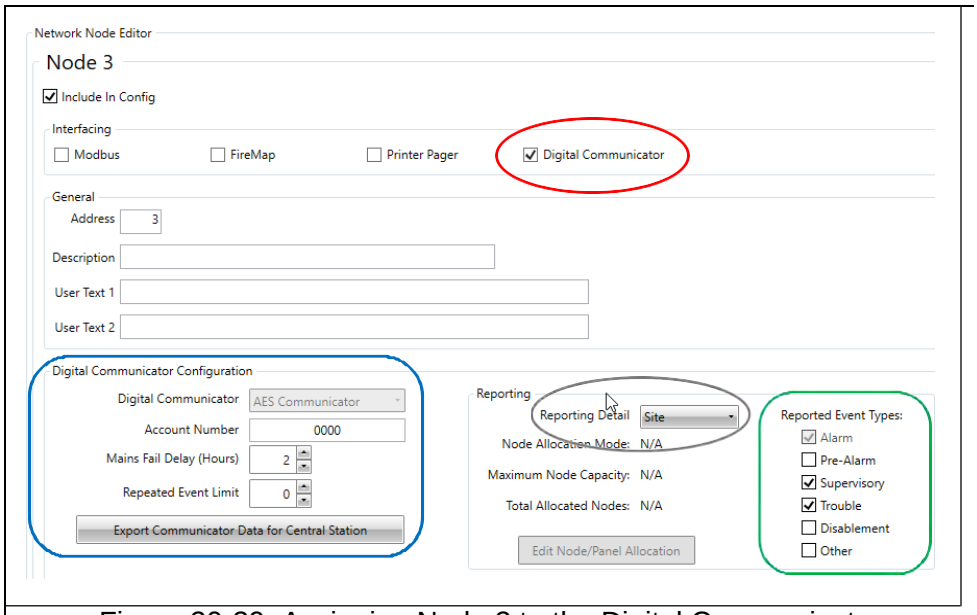

Figure 20-39: Assigning Node 3 to the Digital Communicator

NOTE:

In this example, although Node 3 will be physically located in Panel 1, it is logically part of the network and is not assigned to any panel. It could be installed in any panel or it could function as a standalone unit. As a result, on right clicking on Node 3, the "Assign Existing Panel Configuration" is greyed out.

20.5.4.7 Adding the F220 Full Function Annunciator to Node 2

- In FireUtils' Component tree, click on F220 Panel 2, and in the F220 Panel Editor, increment the LCD count to 1.

- **NOTE:** Although the maximum number of devices attached to Panel 2's External RS485 bus is 32, Full Function Annunciators must use address 8 or lower.

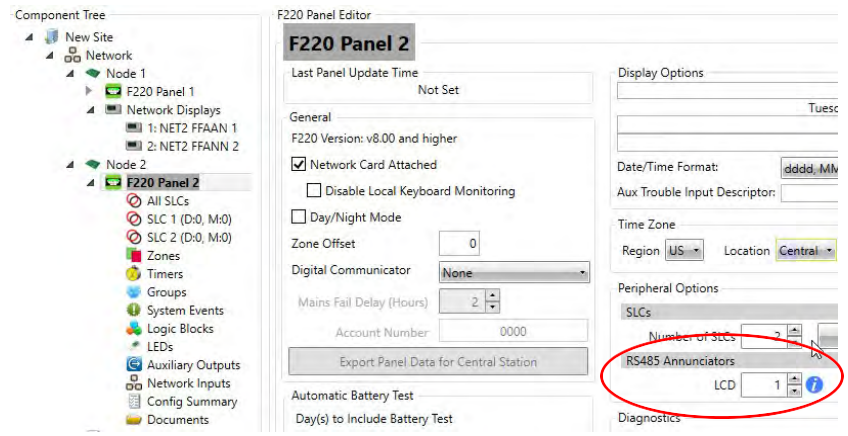

Figure 20-40: Adding the F220 FFANN to Panel 2's Configuration

20.5.4.8 Configuring Network Mappings

Network mappings enable an output signal from one node on the network to be mapped to an input signal on another node. Both the output signal (a "LED") and the input signal ("Network Input") on the two nodes must be defined on separate nodes before any mapping can be created.

FireUtils "Network Mapping Manager" is the tool that is used to create the mappings. To invoke the "Network Mapping Manager", right click on "Network" in the Component Tree and select "Network Mapping Manager".

For this example, Output 1 of an Optical detector connected to Panel 1 (Node 1) has previously been mapped to activate LED 1, and on Panel 2 (Node 2), Output 1 on Network Input 1 has been mapped to activate the Panels' General Purpose Relay.

- Open the Network Mapping Manager.
- Select and click the Available Outputs that are to be mapped. The selected Outputs will be highlighted orange.
- Select and click which of the Available Inputs the Outputs are to be mapped. The selected Inputs will be highlighted orange.
- If available, multiple Outputs can be selected and mapped to one or more Inputs. The network input will be true if one or more selected outputs is true (an OR function).
- If the mapping is correct, click "Add". If incorrect, click "Refresh".
- Once "Add" has been clicked, the mapping will be displayed in the lower panel (See Figure 20-41).

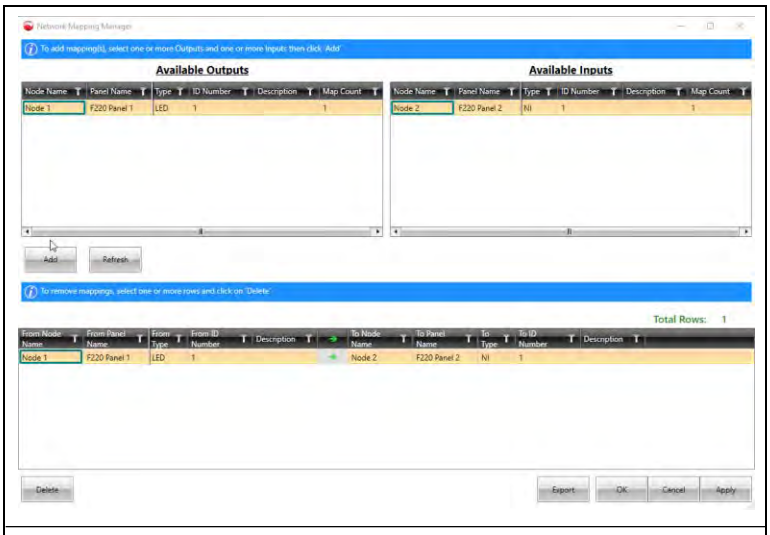

Figure 20-41: "Network Mapping Manager" showing one 'Available Output' that can be mapped to one 'Available Input'.

- If the mapping is correct, click “Apply” and “OK”. If the mapping is incorrect, click “Delete”.

- Both the “Available Outputs” and “Available Inputs” panels have a “Map Count” column. The Map Count is the number of times an ‘Available Output” or “Available Input” has been used in a mapping. A Map Count of “0” indicated the Output or Network Input has no mapping.
- The “Available Outputs” (i.e., LEDs) need a descriptor, or some function mapped to drive them (such as a logic block output). The “Available Inputs” need a descriptor, or have some function mapped to be driven by them (such as a logic block input or other function). The descriptors are saved to the panel’s Configuration.

NOTE:

It should be noted that the procedures described in the example above are not complete. Configuring SLC devices, Timers, Logic Blocks etc., for example, have not been included. Refer to the Pertronic Industries FireUtils User Guide documentation for more details.

20.5.5 Uploading a Network Configuration

A network configuration can be prepared in FireUtils without connection to the network. The only method for uploading a network configuration is by using the FireUtils application and having an Ethernet connection to the NET2CARD.

It is possible to upload the configuration via the Ethernet port on the Panel’s mainboard, but this process only uploads the configuration to that panel, and not to other panels on the network. If the Ethernet port on a Net2Card is used, the configuration is downloaded to all Panels and Net2cards on the network.

It should be noted that the procedures described in the example above are not complete. Configuring SLC devices, Timers, Logic Blocks etc., for example, have not been included. Refer to the Pertronic Industries FireUtils User Guide documentation for details on using FireUtils for network and panel programming.

.

20.5.5.1 Connecting to the NET2CARD

When configuration upload to a network is required:

- Open FireUtils
- In the Tool Bar, click on “Open Project” to load the desired, previously created file
- Connect the Ethernet port on a NET2Card to the PC’s Ethernet port using an Ethernet cable.

NOTE:
NET2CARD connection can also be achieved over an Ethernet network by connecting the NET2CARD and the PC to the same Ethernet network**.**

- Click on the connect icon in the tool bar to open the connection manager
- Select the Network tab on the Connection Manager
- In the Interface pane select the Local Area Connection to be used (in most portable PCs there will only be one connection).

- Click on the “Discover Nodes” button.

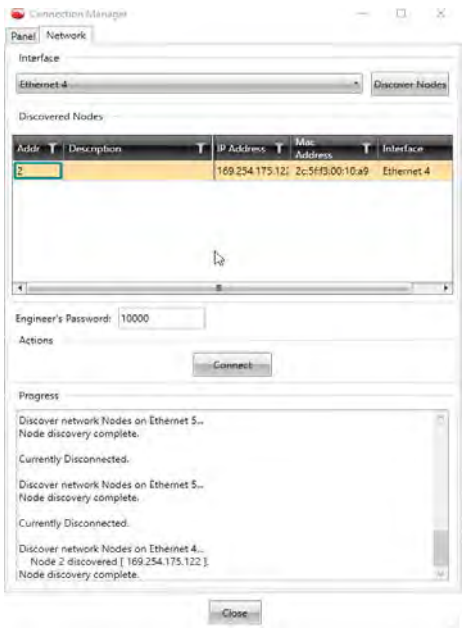

If no NET2CARD nodes are discovered;

- Check the PC to NET2CARD/Ethernet network connection.
- For Ethernet networks, check the network security and subnet arrangements with the network IT manager.

The “Addr” column will contain the attached NET2CARD hardware address

- Select the row containing the correct NET2CARD hardware address.
- Click on the Connect button.

Only one FireUtils connection can be made to a NET2CARD network at one time.

If a NET2CARD is already connected, the service mode window can be opened by selecting “Network” from the menu bar and then selecting “Network Service Mode”.

20.5.5.2 Network Service Mode Window

When the Network Service Mode Window is open, the connected network will operate normally.

The Service Mode window will show the result of comparing the project configuration loaded into FireUtils compared with the information that FireUtils was able to retrieve from the connected network.

The network information can be refreshed by clicking the Refresh button.

Configuration information then can be uploaded by clicking on the Service Mode button to enter Network Service Mode.

- In network service mode the network does not transfer normal operational information from panels so therefore no normal network functions are available.
- Each panel in the network will remain in service and operate independently, the panels will not be able to send fire indications or trouble indications over the network.

- In network service mode the networked alarm panel displays will display “System Offline Service Mode” instead of the “System Normal” message, normal panel keyboard and user menu operations are still available.

In the service mode window, the dots in the “Service Mode State” column will turn from red to green. If there is a problem communicating with a node, the dot may stay red, and no update will be possible on that node.

To start the configuration update process, click the ‘Stage Configuration’ button. This will automatically start three actions:

- Transfer the new configuration over the network.
- Stage the network configuration in the network cards (i.e., it is in card memory and ready to be put into service).
- Stage the panel configurations in the panels (i.e., they are in panel memory and ready to be put into service).

Green dots will appear in the “Network Staged”, “Panel Config Staged” and “Panel Config Staged” columns where the actions have been successful, red dots will show where the staging has failed for some reason. If needed, this part of the update process can be stopped by clicking the “Cancel Staging” button.

The final step is to activate, or put into service, the new configuration. This is done by clicking the “Activate Network” button. All going well, the “Network Staged”, “Panel Config Staged” and “Panel Config Staged” columns will go blank and green dots will appear in the “Network Activated” and “Panel Activated” columns, any problems will be indicated by a red dot and a message in the result column.

The “Exit Service Mode” button should be clicked to put the network back into normal operation.

For complete details on how to upload the configuration, refer to the Pertronic Industries FireUtils User Guide documentation.

20.5.6 Downloading a Network Configuration

The procedure described here is not complete. Refer to the Pertronic Industries FireUtils application documentation for details on using FireUtils for network and panel programming.

To connect FireUtils session to a NET2CARD, see section 20.5.5.1 Connecting to the NET2CARD.

Close the Network Service Mode window if it is open.

- From the FireUtils menu bar, select “File” then “New Project” to create a blank project.
- From the FireUtils menu bar, select “Network” then “Retrieve New Network Configuration from connected network”.

After a short time, a new FireUtils project will be created from information retrieved from the connected network. This project may be saved to a file.

- Disconnect from the network, if required

20.6 USB Download/Backup of NET2CARD Configurations

20.6.1 USB Flash Memory File System Format

The USB flash memory stick used for configuration backup must have a FAT32 file system format for correct operation of the configuration process. The easiest way to check the format of USB memory is to plug the memory into a PC and when it is mounted:

- Open a file explorer window.
- Right click the drive letter representing the USB memory
- Select ‘Properties’ from the menu.

If the file system is NTFS or another format, it can be formatted to FAT32. There are several ways of formatting to FAT32, all involve total loss of any existing files. Any reformatting is best done on a smaller size (less than 32GB) USB memory stick. An internet search on “FAT32 USB format” should provide some good advice on reformatting using ordinary PC operating system utilities.

20.6.2 Downloading NET2CARD Configurations

Downloading (backing up) NET2CARD configurations is done by plugging a USB memory stick into the NET2CARD while it is in its operational state. The NET2CARD will detect the presence of the USB memory stick, create a backup directory if one does not exist already, and download a configuration file (.tar format) and matching MD5 file to the backup directory. A backup will be created every time a USB memory stick is inserted.

USB memory stick setup:

- The USB memory stick must be FAT32 formatted.

NET2CARD setup:

- The NET2CARD must be powered up to its normal operational state. This includes the SW3_4 switch being set to OFF.

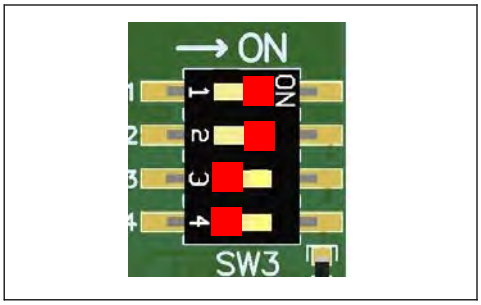

Figure 20-42: SW3 normal setting

Backing up a NET2CARD configuration:

- Insert USB memory stick into socket J1.
- The USB active LED will start fast blinking when the configuration is being backed up. A configuration will take between 5 seconds and 20 seconds to back up.
- The USB active LED will show a repeating pattern of two short blinks then off for half a second after successfully backing up the configuration to the USB memory stick.
- Remove the USB memory stick.

The result of the upload activity will be recorded in the NetworkConfigLog.txt file in the NET2_Config directory on the USB memory stick. This file and directory will be created if they don't already exist and new activity will be appended to the log file.

See Section 20.6.3 Checking the backup results for backup failure indications.

The backed-up configuration will be stored in files named:

- NetworkConfigurationBackup-xxx-yyyymmdd-hhmmss.tar
- NetworkConfigurationBackup-xxx-yyyymmdd-hhmmss.tar.md5

The file name is constructed from:

xxx	NET2CARD hardware address
yyyymmdd	Year Month Day in numeric format (local time)
hhmmss	Hours Minutes Seconds in 24-hour format (local time)

The backup files are in a binary format that can be read by FireUtils.

The ".tar" and ".tar.MD5" files are a matched pair.

FireUtils will search in the tar file directory location for the MD5 file and use it to verify the content of the tar file. If the MD5 file is absent, FireUtils will warn of the MD5 file absence but will also offer to load the tar file without verification.

NOTE: The NET2CARD's internal calendar clock may continue to run for up to two weeks without power. After two weeks, and if the NET2CARD is not able to retrieve the correct time from a network, the calendar year will revert to 1970. A configuration backup can still be performed successfully.

20.6.3 Checking the backup results

Most often the configuration download/backup results will be ok, but failures can occur for various reasons. The USB LED activity will generally be the first indication of a problem, see Figure 20-42 for possible failure indications.

USB LED Activity	Notes
Slow blink, 0.5s on /0.5s off	NET2-FFANN is ready for a firmware upload and waiting for a USB memory stick to be inserted.
Constant fast blink	NET2-FFANN is uploading firmware from a USB memory stick
Steady on	Successful firmware upload.
Slow blink, 0.5s on /0.5s off	Firmware upload failure if the USB memory stick is still inserted.

Figure 20-43: USB LED Activity for Configuration Backup/Download

Possible causes of configuration backup/download failures:

- The USB memory stick could not be written to for some reason. It may be full or not FAT32 format.

The configuration log file will contain more detail on what problems may have caused a failure indication. This is a plain text file named NetworkConfigLog.txt in the USB memory stick NET2_Config directory.

20.6.4 Updating Net2Card Firmware

NET2CARD firmware can be loaded into a NET2CARD using a USB memory stick. All the NET2CARDs in a network should be loaded with the same firmware version. The firmware update process effectively isolates the NET2CARD from whatever network and F220 panel it may be connected to while the update is in progress.

The firmware update process does not check the firmware version, the uploaded file will always replace the currently loaded firmware.

USB memory stick setup:

- The USB memory stick must be FAT32 formatted.
- Open the zip file containing the firmware to be installed. The zip file name will be in the format eNet-Package_USA_vx.x.x.zip where x is the version numbering.
- Copy the entire directory named “Net2Card_Installer” in the zip file to the root directory of the USB memory stick.

NET2CARD setup:

- Set SW3_4 to “ON” (See opposite, green position).
- Wait for the USB LED to start a slow blink to indicate the NET2CARD is ready for a firmware download, see Figure 20-44
- Insert USB memory stick into the USB socket J1
- Press the reset button.

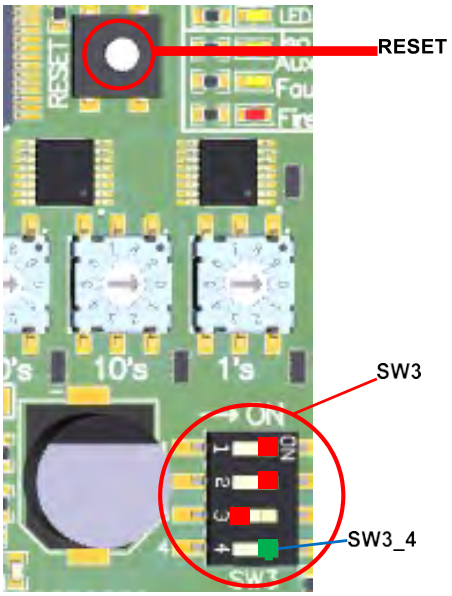

Loading NET2CARD firmware:

- The USB active LED will be fast blinking while the firmware is being loaded (there may be a 10 to 20 second initial delay). The firmware will take up to a couple of minutes to load. See Figure 20-44

- The USB active LED will stay on continuously after successfully loading the firmware from the USB memory stick. A slow blink at this stage indicates a failure.
- Remove the USB memory stick. The USB LED will reduce to a slow blink.
- Set SW3_4 to “OFF”.
- Press the reset button

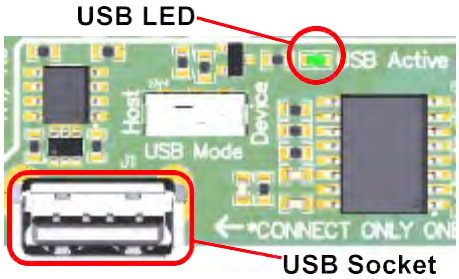

USB LED Activity	Notes
Slow blink, 0.5s on /0.5s off	NET2-FFANN is ready for a firmware upload and waiting for a USB memory stick to be inserted.
Constant fast blink	NET2-FFANN is uploading firmware from a USB memory stick
Steady on	Successful firmware upload.
Slow blink, 0.5s on /0.5s off	Firmware upload failure if the USB memory stick is still inserted.

Figure 20-44: USB LED Activity for Firmware Upload

The NET2CARD will start using the new firmware.

20.7 Boot Flash

The NET2CARD keeps two copies of the boot flash memory, it will report a NAND Trouble to the network if an error in one of the two copies has been detected. The NET2CARD will still boot on one good copy.

20.8 NET2CARD Specifications

20.8.1 Specifications

NET2CARD	
Data Rate: Net In, Net Out, wired interface	425 kbit/s (half duplex)
Data Rate: Net In, Net Out, optical interface	230.4 kbits/s
Data Rate: Network Peripheral Bus	115.2 kbit/s
Connections: RS-485	Screw Terminals
Connections: Optical Fiber	ST
Maximum network wired segment length	1km (1.25mm^2 twisted pair cable)
Maximum Network Peripheral Bus length	1km (1.25mm^2 twisted pair cable)

Supply Voltage (Nominally 24Vdc)	18 Vdc to 30 Vdc
Current Consumption (Standby)	45 mA
Maximum Current Consumption (2x copper network interfaces)	75mA
Maximum Current Consumption (1x copper 1x fiber network interfaces)	90mA
Maximum Current Consumption (2x fiber network interfaces)	105mA
Dimensions (W x H x D)	6.58 x 3.98 x 0.90 in (167 x 101 x 23 mm)
Weight	124 g (PCB only)
Operating Temperature	32°F to 120°F (0°C to 49°C)
Relative Humidity	≤ 95 % non-condensing

NET2 Network Peripheral Bus (NPB)

Data Rate	115.2 kbit/s	
DC Current Capacity:		
NET2 Network Peripheral Bus	0.25 A	Supplied by NET2 Network Card. (An external power supply may be required to supply multiple NCUs and manage wiring voltage loss.)
Maximum Segment Length	1 km	1.25mm^2 twisted pair cable
Number of Cascaded Segments	2	Maximum
Maximum Overall Length	2 km	
End-of-line (EOL) Termination	90 Ω – 100 Ω, 0.5 W	Each end of each segment
Annunciators on the Network Peripheral Bus	Up to total of 8 Annunciators	Can be any mixture of Annunciator types.

Table 20-10: Net2Card Specifications

20.8.2 NET2CARD PCB Layout

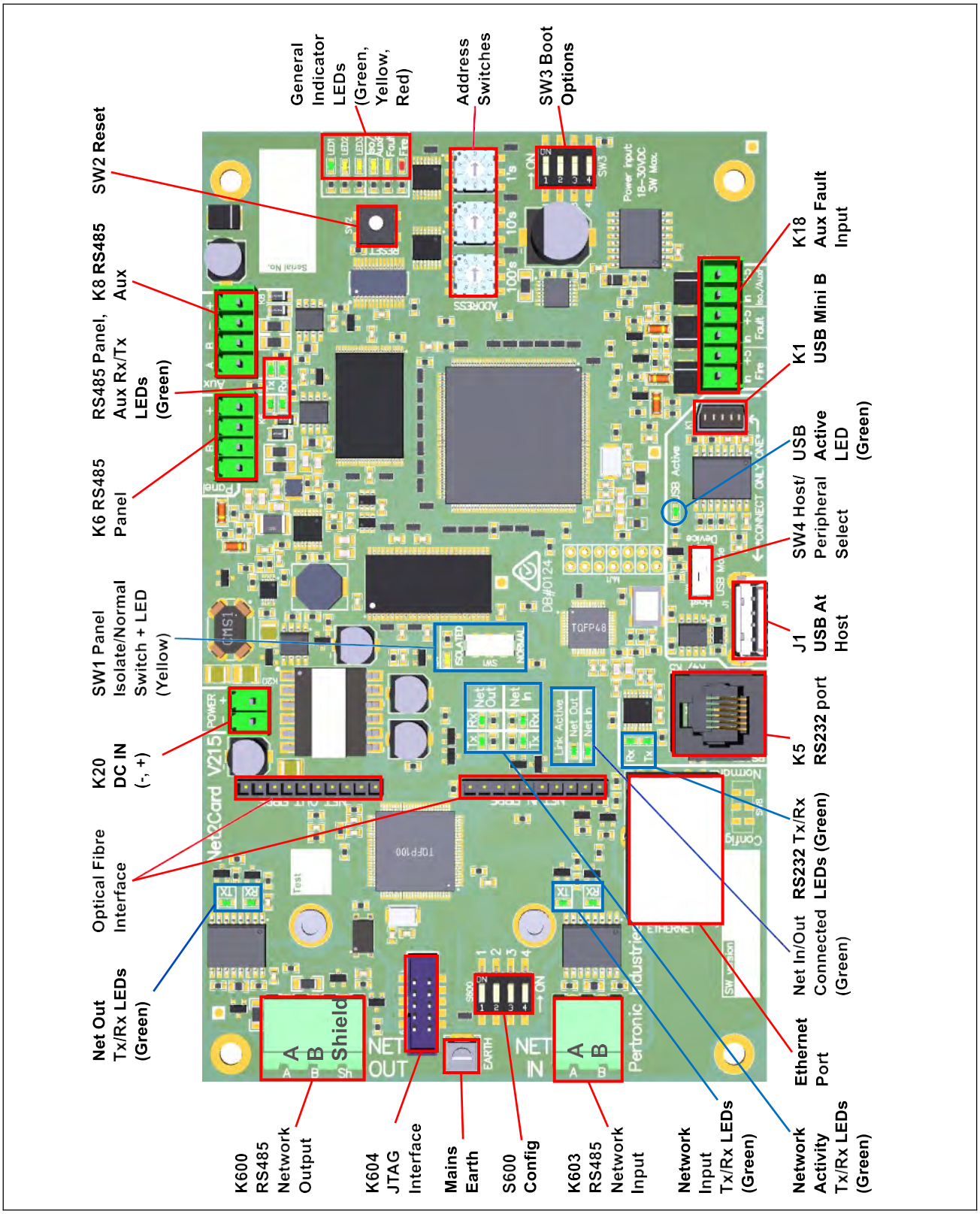

Figure 20-45: Net2Card PCB

20.8.3 F220 Power, System and Network Wiring

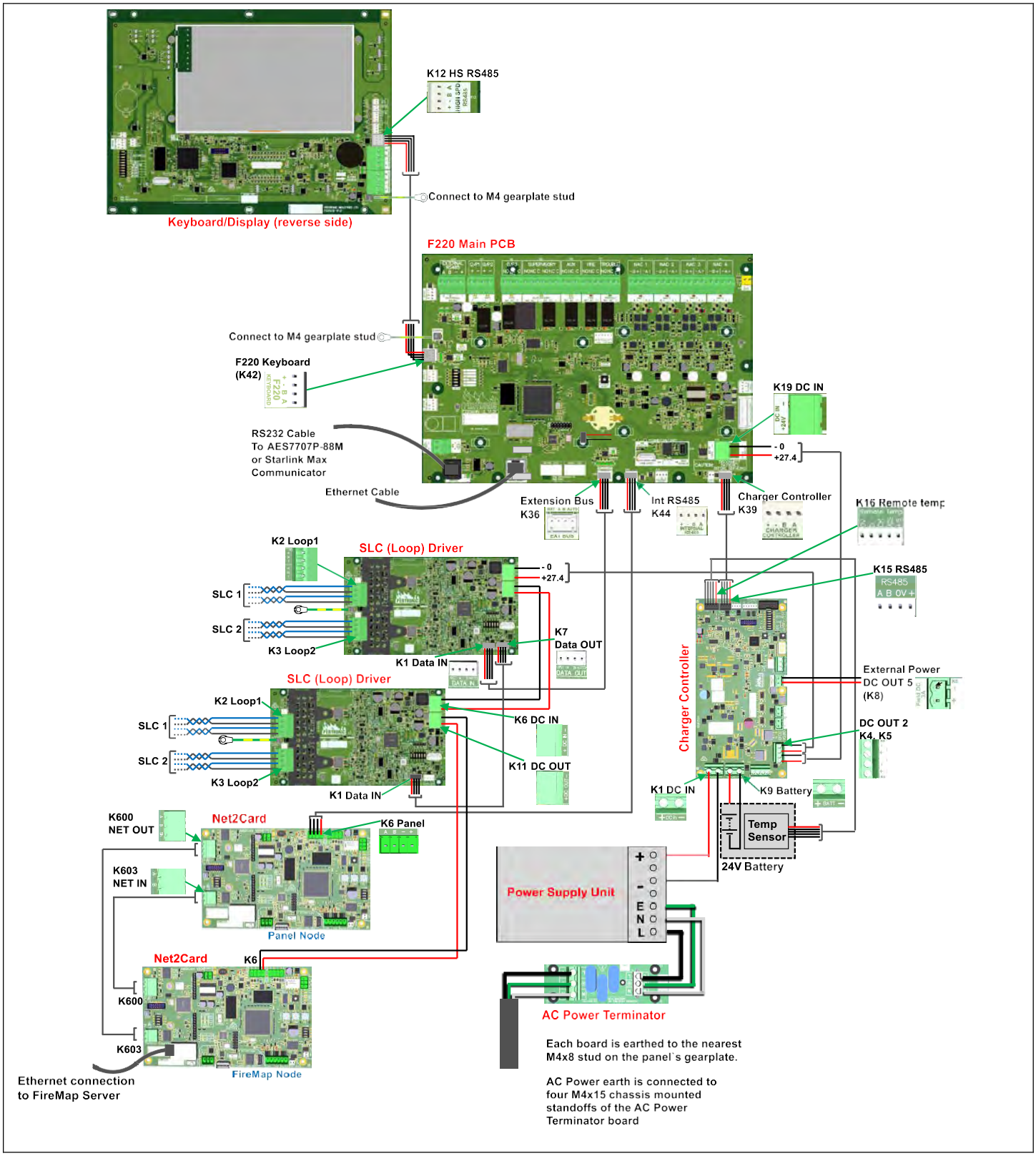

Figure 20-46: F220 Power, System and Network wiring diagram

20.8.4 Net2Card PCB Field Wiring

Connectors									
Connector Designator	**Connector Description**	**Connector Header/ Plug**	**Connector PCB Label**	**Input/ Output**	**Protocol/Rating/ Signaling Type**	**Wiring size range AWG Solid/ (Stranded)**	**Supervised**	**Power Limited**	**Output: Max Frequency Max Current Max Voltage**
K1	USB Mini B		Slave	I/O				Power limited	Not intended for field wiring
K5	Panel RS232		Rx, Tx, 0V Panel RS232	I/O	RS232 9600 baud, 8-bit, no parity, 1 stop bit. Intended for connection to external digital communicator	RJ11 (RJ11)	Class B	Power limited	The digital communicator must be located in the same room, within 20 feet of the F220 and the cable housed in conduit.
K6	RS485 Panel		A, B, -, +	I/O		15-25 (15-25)		Power limited	Not intended for field wiring
K8/K108	Network Peripheral Bus RS485	XCFR2 FW2/FW1	A, B, -, +	I/O	RS485	(15-25)	Class B	Power limited	
K18	Aux Fault Input		Fire, Fault, Iso/AuxF	IN		15-25 (15-25)	SC-active, not fully supervised	Power limited	Not intended for field wiring
K20	Power In		Power - +			15-25 (15-25)		(Input)	Not intended for field wiring
K600/K601	RS485 Network Out	XCFR2 FW2/FW1	Net Out	I/O	RS485	12-22 (12-22)	Class X with looped network, otherwise Class B	Power Limited	100mA
K602	Mains Ground		Ground			12-3- (12-30)	Not intended for field wiring		
K603/K605	RS485 Network In	XCFR2 FW2/FW1	Net In		RS485	12-22 (12-22)	Class X with looped network, otherwise Class B	Power Limited	100mA
J1	USB Port USB-1		Host					Power Limited	Not intended for field wiring
J2	Ethernet Port		Ethernet					Power Limited	Not intended for field wiring

MJ600	Header for Net Out Fiber Module		Net Out Fiber					Power Limited	Not intended for field wiring
MJ601	Header for Net In Fiber Module		Net In Fiber					Power Limited	Not intended for field wiring

Table 20-11: Net2Card PCB Field Wiring Data

20.8.5 FibNet Modules

Designator	Description	Connector labelling	Input/Output	Protocol/Rating/ Signaling Type	Fiber Size	Supervised	Power Wavelength Attenuation Segment Length
FibNet-MMF (If fitted)	Net2Card Fiber I/O	Tx	Out	Multi-Mode	50/125um, or 62.5/125 um	Class A with looped network, otherwise Class B	Tx Power: 3dBm to -9dBm Wavelength: 1260nm – 1360nm Attenuation:7dB/2km budget Max segment length: 2km
		Rx	In				
Wavelength: Attenuations: FibNet-SMF (If fitted)	Net2Card Fiber I/O	Tx	Out	Single Mode	9/125um	Class A with looped network, otherwise Class B	Tx Power: 3dBm to -9dBm Wavelength: 1260nm – 1360nm Attenuation: 11dB/20km budget Max segment length: 20km
		Rx	In				

Table 20-12: FibNet Field Wiring Data

20.9 NET2CARD Peripherals

20.9.1 Overview

Currently there are two Pertronic Annunciators:

- NET2-Full Function Annunciator (NET2-FFANN) – a full function annunciator which connects to a Net2Card and is able to receive events and control panels over the whole network.
- F220-Full Function Annunciator (F220-FFAANN) - a full function annunciator which connects to the External RS485 connector (K24) on the F220 panel's mainboard. This annunciator is local to the panel to which it is attached.

Both annunciators use the same hardware as the F220 Keyboard and apart from whether the annunciator is connected to a NET2Card or to the Mainboard, the only difference between the two is the firmware. That is, all the descriptions of the functions below of the NET2-FFANN are the same for the F220-FFANN.

For instructions on uploading either NET2-FFANN or F220-FFANN firmware refer to the note in Section 20.9.15.3

20.9.2 NET2 Full Function Annunciator

The NET2 Full Function Annunciator provides access to all F220 panels on the network. The menu structure is identical to the one available via the F220 panel's keyboard (See Figure 20-51) but not all options are available. In particular, the Full Function Annunciator cannot be used for altering or updating the configuration of an F220 panel.

The NET2-FFANN display may be installed in its own case or inside an F220 panel in place of the F220 Keyboard/Display.

Figure 20-47: NET2-FFANN in a stand-alone case

At least one NET2 Full Function Annunciator is required in any networked F220 system, as this is the only way to get a system wide network view.

20.9.3 NET2 Full Function Annunciator Controls and Display

The NET2 Full Function Annunciator has an 800 x 480-pixel active matrix TFT color LCD display.

The display is within the Emergency Response Panel or Window (enclosed by a red border), together with pushbuttons and LED indicators. The Fire Alarm Panel is primarily for use by emergency responders. Outside the Fire Alarm Panel, additional engineering controls (pushbuttons and indicator LEDs) are available for use by the building manager and fire alarm engineers.

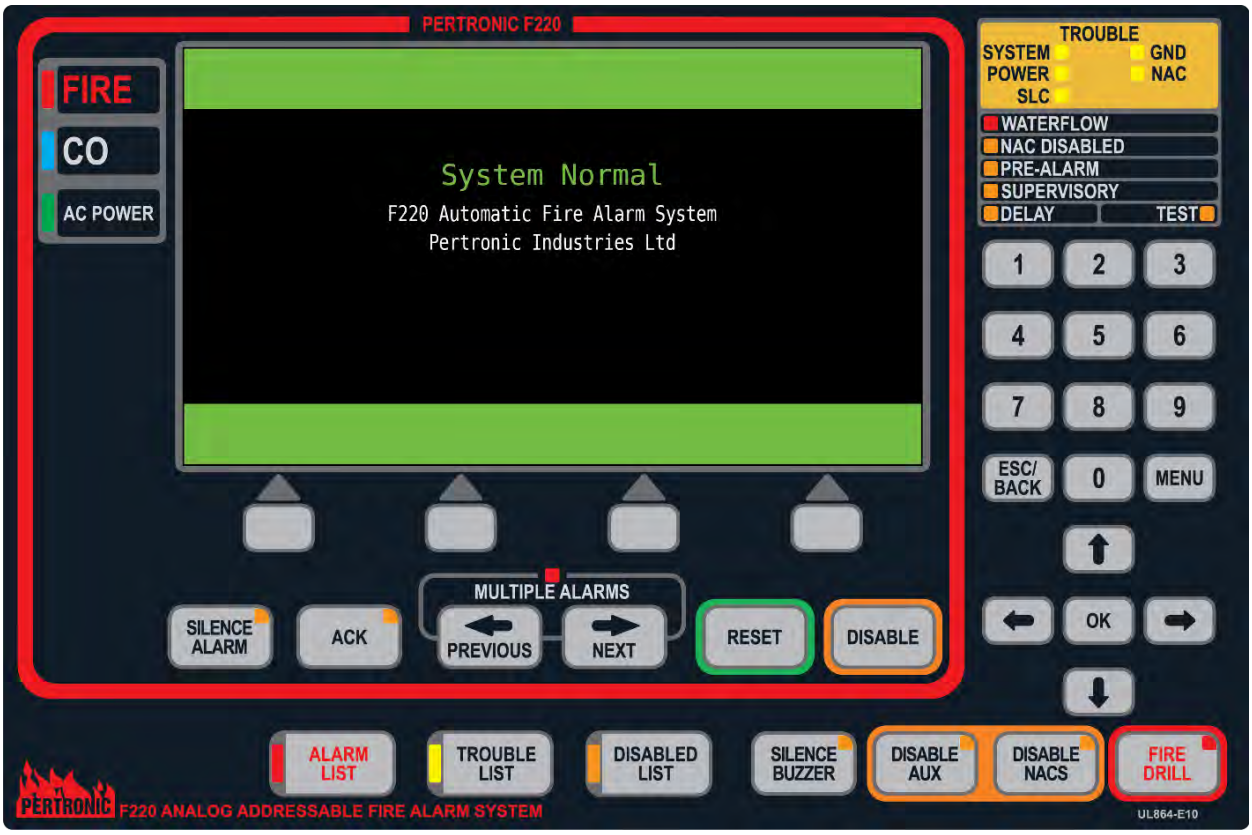

Figure 20-48: NET2 Full Function Annunciator display and keyboard

20.9.4 Network Global buttons

The following buttons on the NET2-FFANN will operate on the entire F220 network:

Front panel display

Fire alarm panel

20.9.5 Fire Alarm Panel

The red border, as shown in Figure 20-48 and Figure 20-50, encloses the Emergency Response Panel. See Section 20.9.10 Operating the Emergency Response Facility for operating instructions.

20.9.6 Emergency Response Indicators

These are LED indicators. Normally, only the power indicator is on.

Indicator	Function	Color	Description
	FIRE	Red	General Fire Alarm Indicator.
	CO	Blue	Indicator ON when a Carbon Monoxide detector is activated. By default, a CO event is not latched.
	AC Power	Green	ON when AC power is available.
	Silence Alarm	Yellow	ON when all alarms have been silenced after the 'Silence Alarm' button has been pressed. Blinking ON and OFF if one or more panels on the network have silenced alarms and one or more panels still have active alarms. New Alarms, received after the Silence Alarm button has been pushed, will cause the Alarms to sound and the Silence Alarm LED to turn OFF
	Ack	Yellow	Flashing ON and OFF when an off-normal situation, such as an alarm, pre-alarm, trouble, supervisory, or active event has occurred. ON when all off-normal situations have been acknowledged. OFF when all off-normal situations have been resolved and the system reset.
	Multiple Alarms	Red	Indicator for several alarms. Flashing ON and OFF if three or more devices are in alarm

20.9.7 Emergency Response Controls

These controls are used when responding to a fire.

Switch	Control	Function
	Silence Alarm	Press to temporarily silence all audible annunciators but not the panel buzzer, land turn off the visual notification appliances on the four NACs and SLC circuits. The 'Silence' function is cancelled if: • the 'Silence Alarm' button is pressed again (toggle action)

Switch	Control	Function
		• any new 'Alarm' event or any action of 'Disable NACs' function. Input(s) activating the 'Silence' output must return to Normal before 'silence' can re-activate. The 'Silence Alarm' event is recorded in the Main Log. Selectively silencing individual NACs is not available
	Ack	Press to 'Acknowledge' all unacknowledged off-normal event (Alarm, Pre-Alarm, Trouble, Supervisory). Adds 'Acked' to the text of the event time in the off-normal Event display. First press will mute the Buzzer.
	Previous, Next (Multiple Alarms)	Scroll keys used to view devices in alarm. The scroll keys will only have effect if three or more devices are in alarm.
	Reset	Press to 'Reset' the FACP to its 'Normal' condition. Any Troubles remaining after the FACP has reset will be re-established within 20 seconds.
	Disable	In the 'Primary Alarm View', pressing 'Disable' navigates to the 'Alarm List' view. In the 'Alarm List' view each latched fire event can be individually selected and then disabled by pressing the 'Disable' button.

20.9.8 Engineering Indicators and Controls

The indicators and controls outside the Emergency Response Panel (or Window) are for the use of the building owner or service and maintenance personnel. These are shown in the next two sections.

20.9.8.1 Engineering Indicators

Indicator	Function	Color	Description
	Alarm List	Red	Indicates that devices are in alarm and can be viewed by pressing the associated switch.
	Trouble List	Yellow	Common Trouble indicator. ON whenever any Trouble is present on the system. In addition, one or more Trouble category indicators will also be ON (see below). Troubles can be viewed on the display by pressing the associated 'TROUBLE LIST' switch
	Disabled List	Yellow	Indicates that devices are disabled. Disablements can be viewed on the display pressing the associated 'DISABLED LIST' key.
	Silence Buzzer	Yellow	ON if the Buzzer has been silenced. Refer to Section 20.9.7
	Disable AUX	Yellow	ON if the AUX relay has been disabled. Refer to Section 20.9.7

Indicator	Function	Color	Description
	Disable NACs	Yellow	ON if all four NACs circuits have been disabled. Refer to Section 20.9.7
	Fire Drill	Red	ON when the Fire Drill switch has been pressed to initiate a Fire Drill (manual evacuation). Pressing the Fire Drill switch again will turn the indicator OFF and deactivate the fire drill evacuation
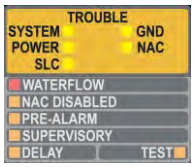	System	Yellow	ON when a System Trouble is present - Program monitoring, Configuration memory
	GND	Yellow	ON when a 'Ground Trouble' is detected by the FACP. A 'Ground Trouble' occurs when any internal panel circuitry and/or external circuits such as SLCs, NACs, RS485 busses etc. connected to the panel have a low resistance (i.e., short circuited, or '0 ohms') path to AC power ground.
	Power	Yellow	ON when there is a Power Trouble with the FACP or devices connected to the SLC e.g., AC power missing, battery test failure.
	NAC	Yellow	ON when a Notification Appliance Circuit (NAC) wiring trouble is detected, such as a short or open circuit. Devices are connected to the NAC in either a Class A or Class B configuration.
	SLC	Yellow	ON when a Signaling Line Circuit (SLC) trouble is present e.g., wiring open or short.
	Waterflow	Red	ON if there is waterflow in a sprinkler system.
	NAC Disabled	Yellow	ON if all NAC circuits have been disabled.
	Pre-Alarm	Yellow	ON when detectors have gone off-normal and potentially could soon go into an Alarm state
	Supervisory	Yellow	ON when a supervisory input is in the active state.
	Delay	Yellow	ON when one or more output circuits are in a delayed operating mode
	Test	Yellow	ON when one or more zones are in 'Walk Test' mode, or an 'Output Test' is running

20.9.8.2 Engineering Controls

Switch	Control	Function
	Alarm List	Press to view a list of all points that are currently in an 'Alarm' state ("points" includes: devices, logic blocks, timers etc.)
	Trouble List	Press to view a list of all current trouble events
	Disabled List	Press to view a list of all devices currently disabled

Switch	Control	Function
	Silence Buzzer	Press to toggle the silence/enable state of the F220 Buzzer. When silenced, the F220 buzzer is muted, the 'Silence Buzzer' indicator is ON, and the Main, and Disablement logs are updated. Pressing 'Silence Buzzer' key again will reactivate the Buzzer and turn OFF the 'Silence Buzzer' LED. If the Buzzer is still silenced 24 hours after an Alarm or 24 hours after a Trouble, it automatically resounds.
	Disable Aux	Press to toggle the disable/enable state of the Aux Relay. When disabled, the Auxiliary relay is prevented from activating, the Disabled List and Disable Aux indicators are on, and the Main and Disablement logs are updated. If the Aux Relay is already active, the 'Disable Aux' key is disabled. Pressing the 'Disable Aux' key again, enables the activation of the Aux Relay, and turn off the 'Disable Aux' and 'Disabled List' indicators
	Disable NACs	Press to toggle the disable/enable state of the four NAC circuits. When disabled, all NAC circuits are prevented from activating any attached devices, the 'NAC Disabled', 'Disable NACs' and 'Disabled List' indicators are ON, the 'ACK' LED will flash, and the Main, Disablement and Trouble Logs are updated. Pressing 'Disable NACs' again, will enable the four NAC circuits and turn the 'NAC Disabled', 'Disable NACs', 'Trouble List' and 'Disable List' indicators OFF.
	Fire Drill	Press to turn ON or OFF the building Fire Evacuation (manual evacuation). The Fire Drill switch is disabled if 'Disable NACs' has been enabled. Use the 'OK' key to step through any active events (e.g., Trouble, System, Disablements etc.
	Function Keys	These four keys select the soft-key functions displayed at the bottom of the display
	OK key	Used to accept 'edit', 'configuration' and other information for data entry functions. Can also be used to select a highlighted menu item.
	Menu key	3. Used to select User and Engineering Menus. 4. Used to return to top level menu system while in 'Classic LCD mode'
	Esc/Back key	1. Used to return to the next higher (parent) level in the menu (except in 'Engineering Display Mode') 2. In 'Engineering Display Mode', Used to enter or exit the various Classic LCD User menu options.
	Navigation Keys	Used to move between 'fields' while viewing lists or 'editing' functions. Can also be used to move a highlight in menus.
	Numeric Keys	Can be used in some menus when a numeric value is required. For example, entering a zone number.

20.9.9 Alphanumeric LCD Display and Menu Functions

The color LCD display is an integral part of the Fire Alarm Panel and provides information and menu structures for use by:

- Fire Department
- System users
- Technicians
- Engineers

20.9.9.1 Event Display and Event Queues

Whenever an event occurs on the NET2 NETWORK system it is placed into one of the following queues:

Queue		Contains / example	Priority
Alarm	Alarm	Devices in Alarm	Highest
Pre-Alarm	Pre-Alarm	Detectors that are very near the alarm threshold	
Supervisory	Supervisory	Outputs of systems monitoring, suppression systems, air handling systems or other life, safety or property protection systems.	
Trouble	Trouble	Contains all panel troubles such as 'duplicate address', missing devices, power supply, system, SLC, ground, and NAC troubles	
Walk Test	Walk Test	Zones that have "Walk Test" alarms	
Disablement	Disablement	All devices and zones that have been disabled	
System Events	System Events	See Section 2.2.10	
Active Events	Active Events	Typically inputs from monitoring devices that are "off normal".	Lowest
System Normal	System Normal	Normal View (no events in any queue).	

Figure 20-49: Color coded Event display!

An event queue that contains current information is deemed to be active and the event queue with the highest priority will be displayed. If other queues are also active with lower priority events this will be indicated by the appropriate LED indicator and the user can view these if required.

The alarm queue contains active alarms and when all alarms have been either reset or disabled the Alarm Queue becomes inactive.

The user may switch between active queue displays (or views) by repeatedly pressing OK.

Each queue or event type uses a different color on the display (see Figure 20-49) to enhance the user experience.

When there are no system events to display, the "Normal View" is displayed, see Figure 20-49. The system events display is presented if the keyboard is idle for 15 minutes or the ESC/BACK key is pressed

multiple times or the NCU door is closed. Pressing the MENU key repeatedly will toggle the display between system events display and the top-level user menu.

If there are system events to display, the display color will change to match the highest priority event and the event queue for that priority level will be displayed.

20.9.10 Operating the Emergency Response Facility

The facility highlights, and provides key controls, to enable an 'Alarm' to be satisfactorily dealt with by fire fighters or emergency responders providers.

For reference, the layout of the Fire Alarm Panel is shown in Figure 20-50.

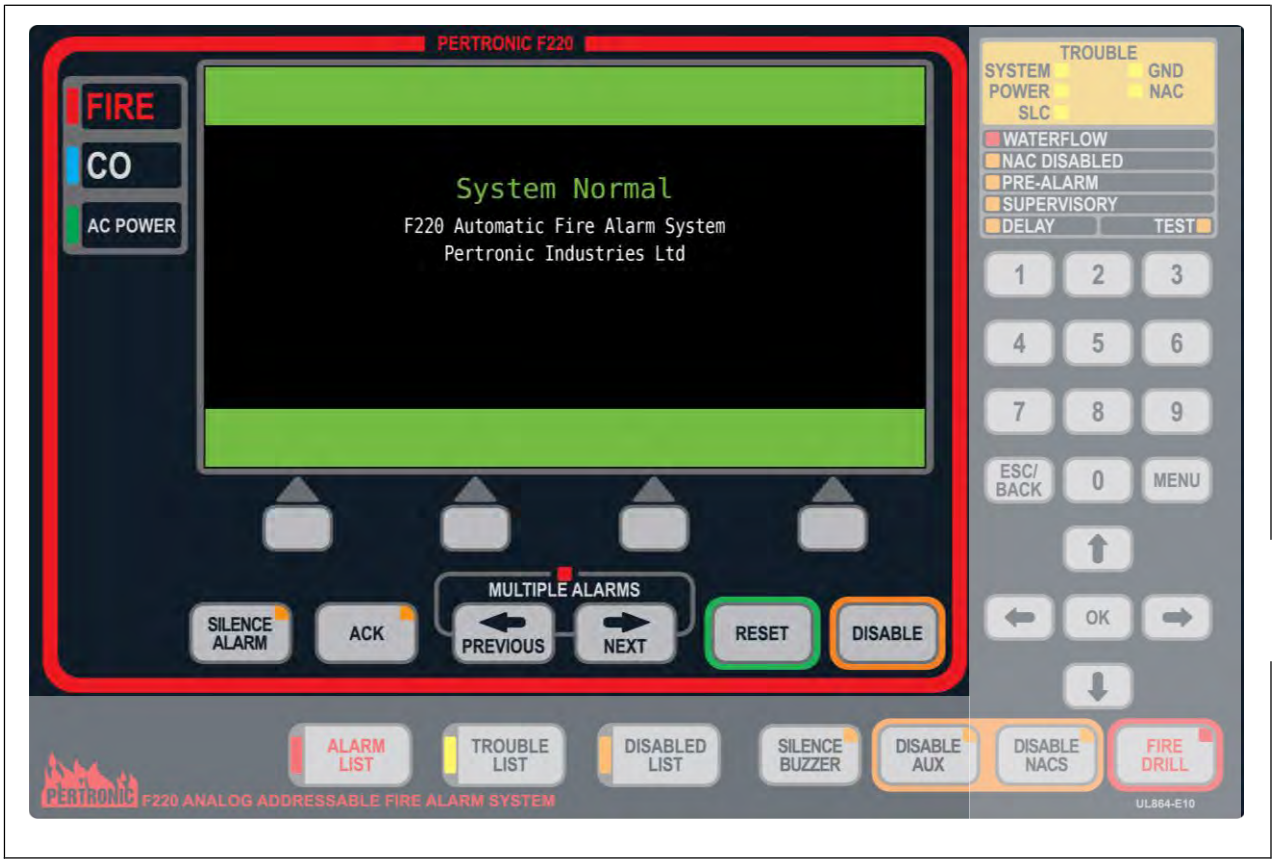

Figure 20-50: The Emergency Response window on the Front Panel

20.9.11 Responding to a Fire Alarm

Figure 9-2 and Figure 9-3 are examples of the indicator, switches and screens that a fire fighter or emergency response provider may access on the Full Function Annunciator, once on site, to determine the location and extent of the fire, and finally reset the system

20.9.12 NET2 Full Function Annunciator Menus

Menu items marked with an asterisk (*) in the menu tree diagram, see Figure 20-51, offer a network node selection field, see Figure 20-52. The menu item is otherwise identical to what would be displayed on the F220 keyboard, for information on the F220 menu items see the F220 technical manual. The F220 panel

on the selected node is then the target of any subsequent action on that menu item. If there is no F220 panel on a node then that node is not offered for selection.

Menu items marked with “(Global)” and “(Global Events)” will operate on or display information from the entire network. Greyed items in the menu tree are not available.

Numeric field entries may be changed by pressing the numeric buttons or pressing the up and down arrows. Menus can be navigated by using the arrow keys and the number keys.

One or more detection devices and input modules may be set into test mode from the NCU by using the device status display soft keys, see Figure 20-52. The tests may be canceled individually or by using the cancel all softkey.

One or more output modules may be manually activated from the NCU by using the device status display softkeys, see Figure 20-53. The manual activations may be deactivated individually or by using the ’cancel all’ softkey.

When there are both devices/input modules in test mode and manually activated output modules, pressing the ’cancel all’ soft key will raise soft key prompts to either cancel all tests or deactivate all manual activations.

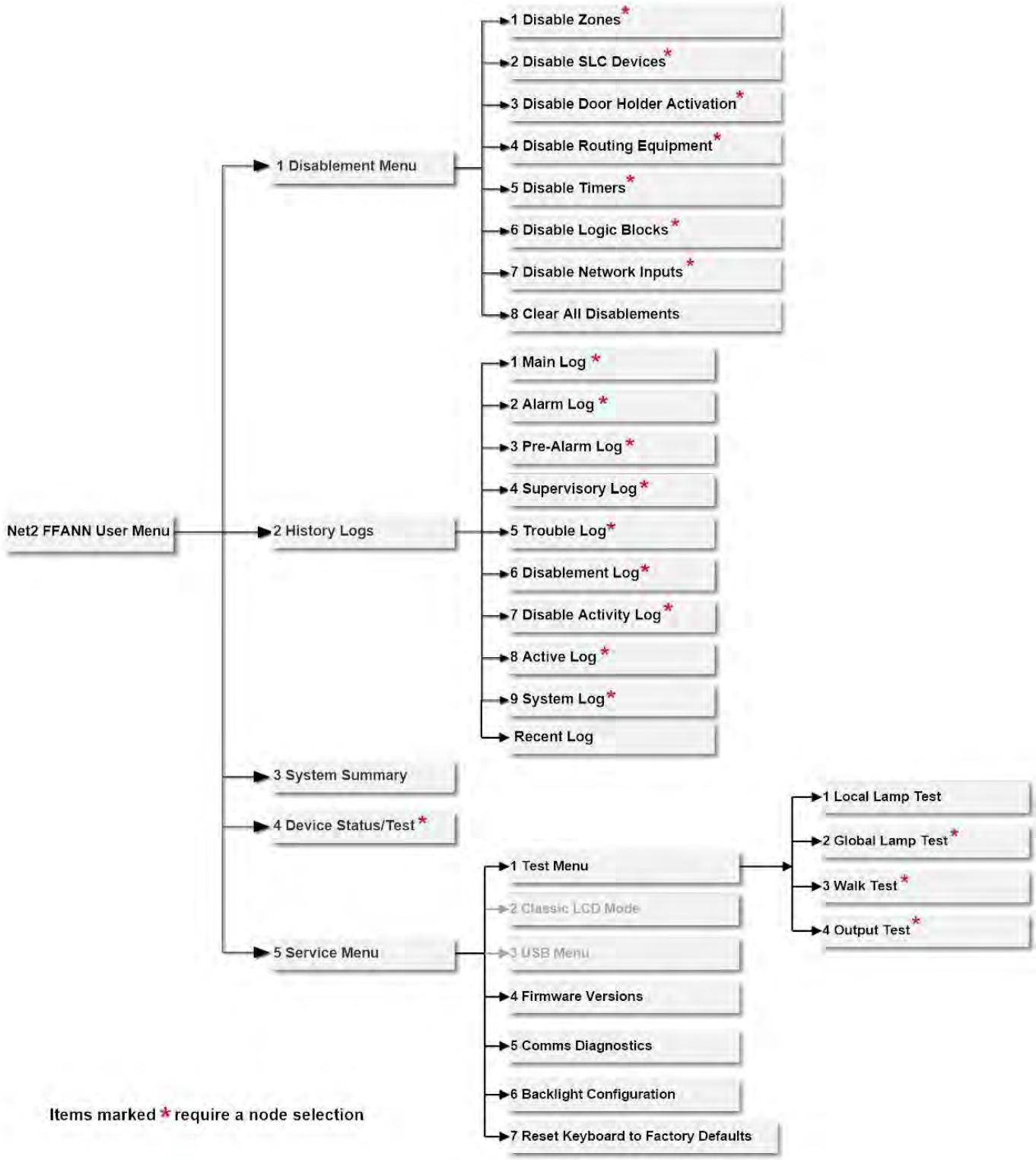

Figure 20-51: NET2 Full Function Annunciator Menu Tree

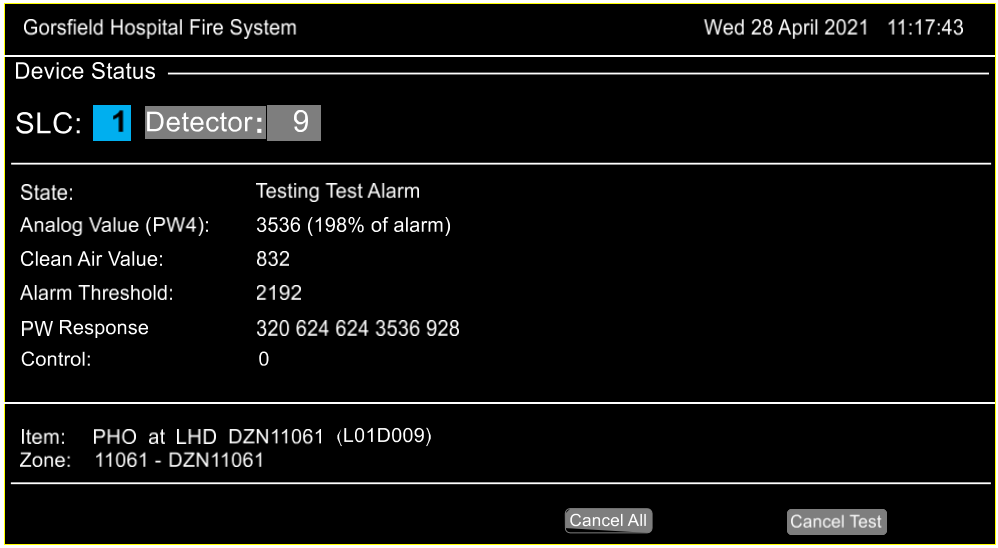

Figure 20-52: NET2-FFANN Device Status Display with Node Information

Figure 20-53: NET2-FFANN Module Status with Node Information

20.9.13 NET2 Full Function Annunciator Connections

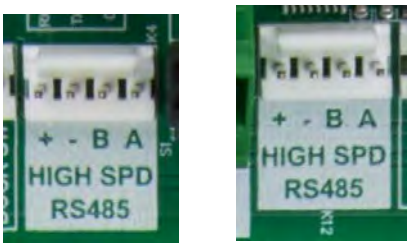

Figure 20-54: NET2-FFANN Internal Network Peripheral Bus connectors K4 and K12

Figure 20-55: NET2-FFANN External Network Peripheral Bus connectors K14 and K13

Figure 20-56: NET2-FFANN activity indicators

Pin	Function
1	+ power input
2	- Power input
3	B (RS485)
4	A (RS485)

Table 20-13: NET2-FFANN NPB (K4, K12, K13 and K14) Pinning

The NET2-FFANN connectors labeled “HIGH SPEED RS485” must be connected to the NET2CARD Network Peripheral Bus interface. The connectors K4, K12, K13 and K14 are wired in parallel within the NET2-FFANN board.

The internal Network Peripheral Bus connectors, K4 and K12, may be used when the NET2-FFANN is installed in an F220 panel. The external Network Peripheral Bus connectors, K13 and K14 should be used when the NET2-FFANN is installed in its own cabinet.

If the NET2-FFANN is the last NCU on the NPB wiring, the termination resistor must be placed on connector K14.

Any data communication activity on the NET2-FFANN NPB will cause flickering of the RX LED (LED6 green). Data transmitted from the NET2-FFANN will cause flickering on the TX LED (LED5 green).

Figure 20-57: NET2-FFANN SW36 buzzer disabled switch and LED29

The buzzer disable switch (SW36) can disable both the internal buzzer output. The SW36 switch slider is shown in the buzzer enabled position in Figure 20-57: NET2-FFANN SW36 buzzer disabled switch when the slider is moved to the right (in the direction of the arrow) the buzzer is disabled.

When the buzzer is disabled, a “Local Buzzer Disabled” message briefly appears on the display approximately every 6 seconds and LED29 (yellow) is lit continuously.

Figure 20-58: NET2-FFANN USB connector J2

Figure 20-59: NET2-FFANN LED25 USB Active

The USB-A connector is used for uploading NET2-FFANN firmware updates (see Section 20.9.15.3). LED25 (green) indicates activity on the USB interface.

Figure 20-60: NET2-FFANN Door switch K1 and K5

Pin	Function
1	Common, 0V
2	Door switch

Table 20-14: NET2-FFANN Door switch K1 and K5 pinning

The door switch input connectors K1 and K5 are wired in parallel in the NET2-FFANN board, either one can be used. The door switch is closed when the door is closed, this is the normal state. Opening the door will open the door switch and create an “Open Door” system event, this system event can be used by the NET2CARD configuration to cause other events or indications.

Figure 20-61: NET2-FFANN CPU Reset Pushbutton SW17

Figure 20-62: NET2-FFANN System Fault Indicator LED27

The NET2-FFANN CPU is reset when pushbutton SW17 “CPU Reset” is pressed. This reset pushbutton is used during the firmware upload process, see Section 20.9.15.3.

The NET2-FFANN CPU is constantly monitored for correct operation. If LED27 (yellow) is lit, the NET2-FFANN has self-reset due to some anomaly occurring. LED27 may come on briefly at power up but should normally be off.

Figure 20-63: NET2-FFANN Connector K8

Pin	Function
1	Common, 0V
2	T.E.
3	BCO
4	Buzzer Silence

Table 20-15: NET2-FFANN Connector K8 pinning

The input signals on connector K8 are Buzzer Silence, BCO and Trial Evacuation (TE). BCO and TE are both global controls, with BCO deactivation isolating all alarms.

20.9.14 Unsupported connections

The input signals on connector K9 are AUX and AUX FLT I/P. They are not supported by the NET2-FFANN.

Figure 20-64: NET2-FFANN Connector K9

Pin	Function
1	Common, 0V
2	AUX FLT I/P
3	Common, 0V
4	AUX

Table 20-16: NET2-FFANN Connector K9 pinning

20.9.15 NET2 Full Function Annunciator Setup

20.9.15.1 Hardware setup

Only the NET2-FFANN address on the NPB requires setup. Valid addresses are from 1 through to 8. Setting addresses higher than 8 does not cause an error on the NET2-FFANN but no communication will be established with the NET2CARD and therefore it will not be polled.

Switch 5, Boot, is off for normal operation and on for firmware upload. For the hardware to be configured as a NET2-FFANN, switch 6, Network, must be set on. Switch 6 can be left in the on position during normal operation to indicate that the hardware is intended to be a NET2-FFANN. See section 20.9.15.3 NET2 Full Function Annunciator firmware upload.

The PCB screen printing for NET2-FFANN DIP switch S1 may not reflect the firmware switch allocation.

Switch	Function	Notes
1	Address bit value 1	NET2-FFANN address, valid range 1 through to 8 NPB address 0 (all address bit = OFF) is reserved for factory test
2	Address bit value 2	
3	Address bit value 4	
4	Address bit value 8	
5	Boot	OFF for normal operation, ON for firmware upload
6	Network	Only valid during firmware upload. ON for a NET2 device firmware upload, OFF for an RS485 device firmware upload.
7	Spare 1	Leave set to OFF
8	Spare 2	Leave set to OFF
9	Spare 3	Leave set to OFF
10	Spare 4	Leave set to OFF
11	Spare 5	Leave set to OFF
12	Spare 6	Leave set to OFF

Table 20-17: NET2-FFANN DIP switch S1 settings

20.9.15.2 Firmware setup

No NET2-FFANN firmware setup is required once firmware is uploaded. The NET2CARD requires configuration to indicate the presence of Annunciators, NET2-FFANN on the NPB, see Section 20.5.3 FireUtils Configuration.

20.9.15.3 NET2 Full Function Annunciator firmware upload

The NET2-FFANN firmware can be loaded into a NET2-FFANN using a USB memory stick.

The firmware update process does not check the installed firmware version, the uploaded file will always replace the currently loaded firmware.

USB memory stick setup:

- The USB memory stick must be FAT32 formatted, See 7.4 USB Flash Memory File System Format.
- Create a folder named “F220Display_Installer” in the root directory of the USB memory stick (if it does not exist already).
- Open the zip file containing the firmware to be installed. The zip file name will be in the format F220_NCU_vx.x.x.zip where x is the version numbering.
- From the F220_NCU_vx.x.x.zip file, copy the entire folder named “NCU” into the USB memory stick folder named “F220Display_Installer”.

NET2-FFANN setup:

- Set DIP switch S1_5 to ON. This switch is labeled “BOOT”.
- S1_5 is only read at start-up.
- Set DIP switch S1_6 to ON. This switch is labeled “NETWORK”. S1_6 is only read at firmware upload time.

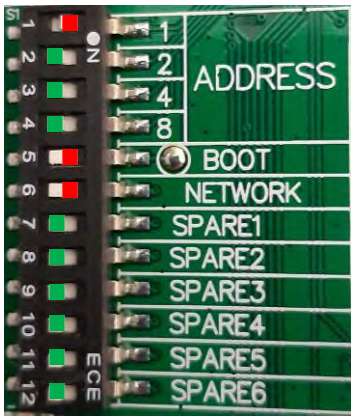

NOTE:

To upload F220-FFANN firmware (rather than NET2-FFANN firmware), set DIP switch S1-6 to OFF.

It is recommended that S1_6 be left in the ON position for a NET2-FFANN, to indicate that the board is intended to be connected to a NET2 network or to OFF for a F200-FFANN.

- Press the reset button SW17, “CPU Reset”.

- Wait for the USB LED to start a slow blink to indicate the NET2-FFANN is ready for a firmware upload. See Figure 20-65.

Loading NET2-FFANN firmware:

- Insert USB memory stick into socket J2.

- The USB active LED will be fast blinking while the firmware is being loaded. The firmware may take up to a couple of minutes to load and there may be brief periods of LED on time as loading progresses.

- The USB active LED will stay on continuously for at least five seconds after successfully loading the firmware from the USB memory stick. A slow blink at this stage indicates a failure.

- Remove the USB memory stick. The USB LED will reduce to a slow blink.

- Set DIP switch S1 switch 5 to OFF.

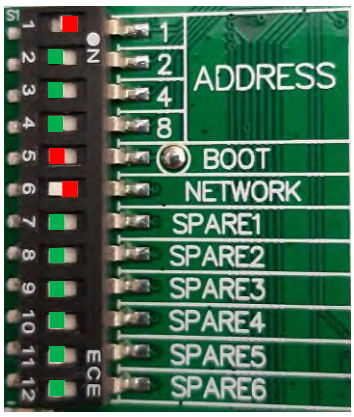

- Press the reset button SW17, “CPU Reset”.
- The NET2-FFANN will start using the new firmware.

At start up the display will show the firmware version.

USB LED Activity	Notes
Slow blink, 0.5s on /0.5s off	NET2-FFANN is ready for a firmware upload and waiting for a USB memory stick to be inserted.
Constant fast blink	NET2-FFANN is uploading firmware from a USB memory stick
Steady on	Successful firmware upload.
Slow blink, 0.5s on /0.5s off	Firmware upload failure if the USB memory stick is still inserted.

Figure 20-65: NET2-FFANN USB LED Activity for Firmware Upload

20.9.16 NET2CARD Peripherals Specifications

	NET2 Full Function Annunciator (NET2-FFANN)	
Input Voltage	15 to 30 Vdc	
Standby Current @ 27 Vdc		
Backlight @ 0%	42 mA	
Backlight @ 50%	60 mA	
Backlight @ Maximum	82 mA	
Alarm Current @ 27 Vdc		
Backlight @ 50%	80 mA	
Backlight @ Maximum	100 mA	
Max. Backlight Brightness	100 %	
Dimensions	14.8 x 9.25 x 2.04 in (375 x 235 x 52 mm)	W x H x D
Protrusion	0.2 in (lock), (5 mm)	(forward from front face)
Weight	6.6 lbs. (3 kg)	
Cabinet Material	Mild Steel	
Cable Termination	20 to 13 AWG (0.5 to 2.5 mm²), Stranded Cable, Plug-in Terminal Blocks	
Chassis Color	Apo Grey (Dulux 915 32786, Croda 6506, Ameron PE549/6506)	
End Stop Color	Grey Friars (Dulux 915 58711, Croda 6499, Ameron AP746/6637)	
Operating Temperature	-10 °C to +50 °C	
Humidity	⩽ 95 % RH, non-condensing	

NET2 Network Peripheral Bus

Data Rate	115.2 kbits/s	
DC Current Capacity:		
NET2 Network Peripheral Bus	0.25 A	Supplied by NET2 Network Card. (An external power supply may be required to supply multiple NCUs and manage wiring voltage loss.)
Maximum Segment Length	1 km	
Number of Cascaded Segments	2	Maximum, using no more than one Pertronic RS-485 Repeater/Splitter
Maximum Overall Length	2 km	With RS-485 Repeater/Splitter
End-of-line (EOL) Termination	90 Ω – 100 Ω, 0.5 W	Each end of each segment
Annunciators on the Network Peripheral Bus	Up to total of 8 Annunciators	Can be any mixture of Annunciator types.

Table 20-18: NET2CARD Peripherals Specifications

20.10 Upgrading a Standalone F220 to a Networked Panel

The example in Section 20.5.4 describes in detail the process of setting up and configuring a Net2 Network. To convert an existing standalone F220 system into a network follow the steps described in that section.

The key elements are

- Connecting the installed Net2Cards to the Mainboard.
- Connecting the Net2-Full Function Annunciators to the Net2Card.
- Connecting, if required, a F220-Full Function Annunciator to the F220 Mainboard.
  NOTE: The Network display (Net2-FFANN) must be installed next to the F220 panel.
- Wiring the Net2 RS485 Network in a loop.

- Uploading the firmware to the Networked F220 panels and Net2-Annunciators in order to display and control network events. For the upload firmware process see Section 20.9.15.3
- Uploading the firmware to the F220-Anunnciator, if required, to display local events only. For the upload firmware process see Section 7.2
- Configuring the Net2 Network in FireUtils. See Section 20.5.4.4 through to Section 20.5.4.8

21. APPENDIX A: UL POWER LIMITED WIRING REQUIREMENTS

Power-limited and non-power limited circuit wiring must remain separated in the cabinet. All power-limited circuit wiring

- Must remain at least 0.25in (6.35mm) away from any nonpower-limited circuit wiring, and
- Must enter and exit the cabinet through different knockouts and/or conduits to nonlimited-power circuit wiring.

An example wiring diagram for the F220 is shown below in Figure 21-1.

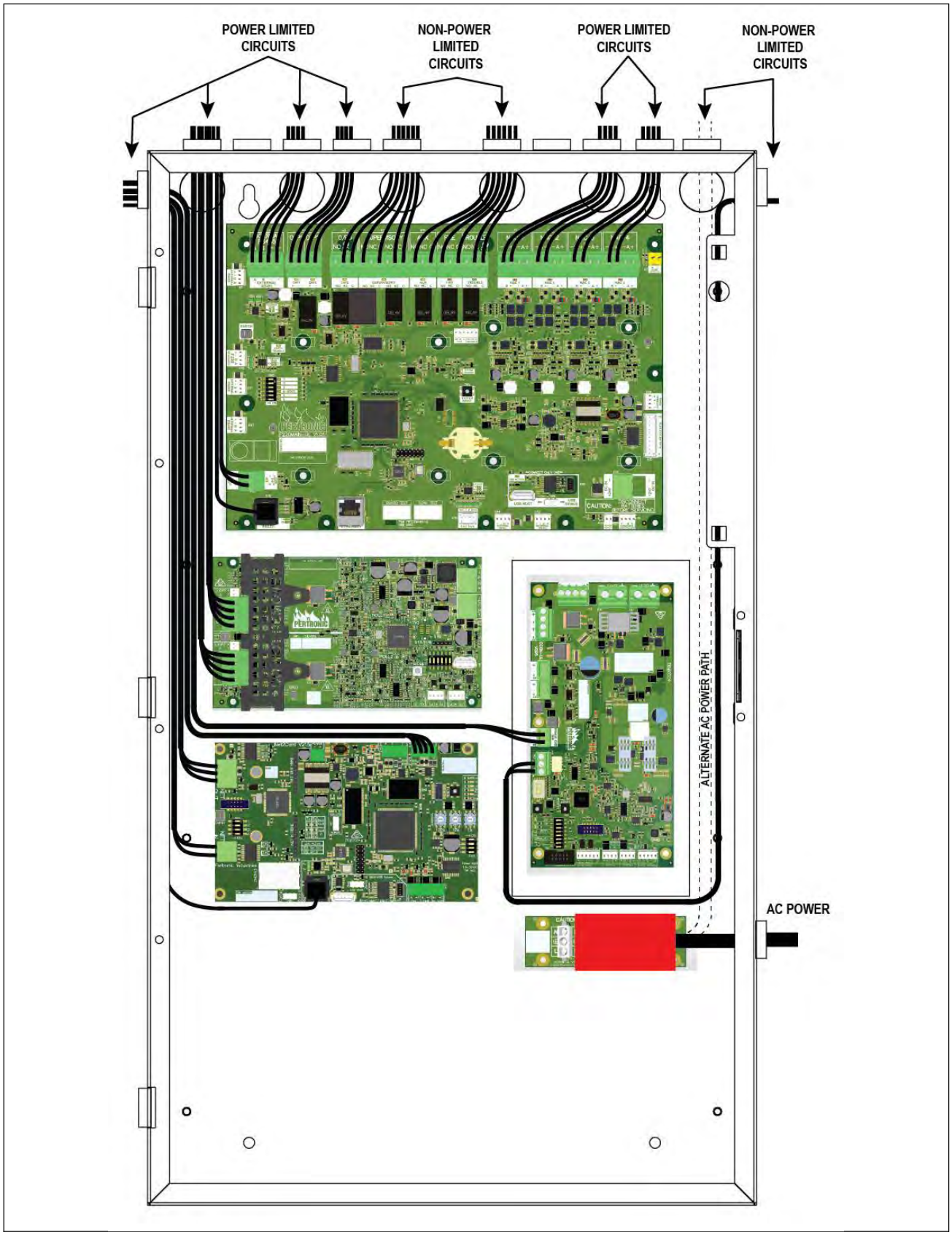

Figure 21-1: Cabinet Wiring Example – Power-Limited and Nonpower-Limited Circuits

22. APPENDIX B: FIRE ALARM OPERATING INSTRUCTIONS

Remove the instructions on the next page from the manual, place in a frame and hang it on the wall adjacent to the Control Panel.

F220-2S, F220-2L
Fire Alarm Control Panel Operating Instructions

Normal – All LEDs off, except for the green AC Power LED. LCD displays System Normal and green bands.

Alarm – Fire LED is flashing red, and evacuation sounders and strobes will be operating.
Evacuate the protected area. Notify the monitoring service and/or the Fire Department immediately.
The upper half of the LCD will display First Alarm information between red bands and the red Alarm List indicator will be on. The yellow Ack indicator will be flashing.
If a second alarm occurs then this information will appear in the 2nd Alarm area in the lower half of the LCD.

Three or more alarms will cause the red Multiple Alarms indicator to flash. Pressing Next or Previous buttons will scroll through alarm location information on the lower half of the LCD.

Alarm Acknowledge – Press Ack to acknowledge all alarms. The yellow Ack indicator will turn solid on (i.e., no longer flashing).
Acknowledging all alarms will silence buzzers on panels and annunciators. Evacuation sounders and strobes will continue to operate.

Alarm Silence – Press the Silence Alarm key to silence all alarms. The yellow Silence Alarm indicator will be on.
If a new alarm occurs then silenced devices will resound and the yellow Silence Alarm indicator will turn off.
Pressing Silence Alarm whilst alarms are already silenced will reactivate the sounders and strobes, and turn off the Silence Alarm indicator.

Alarm Reset – Press the Reset key to reset all alarms.
If there are no more alarms then the System Normal state will resume.
Pressing Reset will always clear all latched events, including alarms and supervisory events.

Alarm Test – Press the Fire Drill key and the red Fire Drill indicator will turn on and evacuation sounders and strobes will operate.
Press the Fire Drill key again to turn off the Fire Drill function. Sounders and strobes will deactivate, and the red Fire Drill indicator will turn off.

Trouble – The yellow Trouble List indicator will be on, one or more trouble indicators may be on (System, GND, Power, NAC, SLC).
Press the Trouble List key to see a list of troubles. For further detail, select a trouble in the list with the Up/Down arrow keys.

Trouble Acknowledge – Press Ack to acknowledge all troubles. The yellow Ack indicator will turn solid on (i.e., no longer flashing).
Acknowledging all troubles will silence buzzers on panels and annunciators. The Silence Buzzer indicator will also turn on.
The silenced state will be automatically cleared 24 hours after a trouble if the trouble was not resolved.

Supervisory Events – To view supervisory events when alarms are active, press the OK key. For further detail, select an event in the list with the Up/Down arrow keys.

DO NOT ALLOW TROUBLE CONDITIONS TO REMAIN UNRESOLVED.
The protection provided by the F220 system could be compromised if a trouble exists.

In the event of battery trouble, check the battery fuse located inline on the battery cable.

Replace only with fast acting 15A 3AG/3AB style fuse.

Recommended maintenance by suitably trained & qualified personnel – Refer to the F220 Automatic Fire Alarm Technical Manual, United States.

Quarterly visual inspection of supervisory signal devices, waterflow devices.

Semiannual visual inspection of alarm notification devices, VRLA batteries, panel trouble signals, emergency voice/alarm communications equipment, initiating devices, electromechanical releasing devices, remote annunciators, transient suppressors, interface equipment, digital communicator.

Semiannual testing of VRLA batteries, emergency voice/alarm communications equipment.

Annual visual inspection of panel LEDs, interfaced equipment, primary power supply, fiber optic cable connections, all other equipment.

Annual testing of F220 panel functions & indicators & power supply, interfaced equipment, alarm notification appliances, VRLA batteries, fiber optic cables, trouble signals, electromechanical releasing devices, remote annunciators, digital alarm communicator.

Biannual testing of smoke detector sensitivities.

Local Service Representative

F220ULOPIN V1.00

These instructions are to be framed and placed adjacent to the Control Panel

23. ORDERING INFORMATION AND SPARE PARTS

23.1 Pertronic Panels, Annunciators, Communicators and Spare Parts

Product Code	Description
F220-2S	F220 Small Fire Panel. (Includes F220-S-ENC, F220MAIN-UL, F220LCD-UL, F220AP2LDB-UL, PSA-150, ACTERM-UL)
F220-2L	F220 Large Fire Panel. (Includes F220-L-ENC, F220MAIN-UL, F220LCD-UL, F220AP2LDB-UL, PSA-200, ACTERM-UL)
F220MAIN-UL	F220 Main Board
F220LCD-UL	F220 Display
F220AP2LDB-UL	2 Loop SLC Board
F220-2LD	2 Loop SLC Board Assembly. (Includes F220AP2LDB-UL, standoffs and cabling)
CCON5-UL	Charger Controller Board 5 Amp
CCON7-UL	Charger Controller Board 7 Amp
PSA-150	5 Amp Power Supply Assembly. (Includes CCON5-UL and 150W AC/DC Converter)
PSA-200	7 Amp Power Supply Assembly. (Includes CCON7-UL and 200W AC/DC Converter)
NET2CARD-UL	Networking Card
NET2CARD-A	Includes Net2Card, DSB-UL (double bracket) and Cables
FIBNET-SM-ST-UL	Single-Mode Fiber Transceiver with ST connector
FIBNET-MM-ST-UL	Multi-Mode Fiber Transceiver with ST connector
ACTERM-UL	F220 AC Protection Board
F220-FFANN	Local Full Function Annunciator (Includes FFANN-ENC and F220LCD-UL. Programmed as local annunciator)
NET2-FFANN	Network Full Function Annunciator (Includes FFANN-ENC and F220LCD-UL. Programmed as network annunciator)
F220-S-ENC	Small panel enclosure, 13.8-inch W x 24.8-inch H cabinet
F220–L-ENC	Large panel enclosure, 15.4-inch W x 26.6-inch H cabinet
FFANN-ENC	F220 and Net2 Full Function Annunciator Enclosure
AES7707P-88M	AES Communicator
SLE-MAX2-Fire	Napco Starlink Cellular Communicator, Dual SIM/Dual Path, panel powered (10V-30.7VDC), plastic enclosure. AT&T/Verizon, Supervised Dual Path Cell-only
SLE-MAX2-CFB	Napco Starlink Cellular Communicator, Dual SIM/Dual Path, panel powered (10V-30.7VDC), metal enclosure, AT&T/Verizon, Supervised Dual Path Cell only.
SLE-MAX2-CFB-PS	Napco Starlink Cellular Communicator, Dual SIM/Dual Path, 120Vac, metal enclosure, standby battery, AT&T/Verizon.
SLE-MAXVI-Fire	Napco Starlink Cellular Communicator, Sole SIM/Dual Path, panel powered (12V/24VDC), Verizon
SLE-MAXAI-Fire	Napco Starlink Cellular Communicator, Sole SIM/Dual Path, panel powered (12V/24VDC), AT&T

SLE-MAXVI-CFB	Napco Starlink Cellular Communicator, Sole SIM/Dual Path, panel powered (12V/24VDC), Verizon
SLE-MAXAI-CFB	Napco Starlink Cellular Communicator, Sole SIM/Dual Path, panel powered (12V/24VDC), AT&T
SLE-MAXVI-CFB-PS	Napco Starlink Cellular Communicator, Sole SIM/Dual Path, panel powered (12/24VDC)/direct 120VAC, standby battery, Verizon
SLE-MAXAI-CFB-PS	Napco Starlink Cellular Communicator, Sole SIM/Dual Path, panel powered (12V/24VDC)/direct 120VAC, standby battery, AT&T
SLE-FIRE-VR	Control Panel Voltage Drop Kit
DSB-UL	Double stack bracket
EOL-10K-UL	End of Line resistor (10KΩ)
EOL-120-UL	End of Line resistor (120Ω)

Table 23-1: Pertronic Panels, Annunciators, Communicators, Boards and Spare Parts

23.2 Analog Addressable SLC Devices

Detectors			
Product Code	**Description**	**Protocol**	**Notes**
MPS-PI	Manual pull-station	CLIP	
2351B	Photoelectric smoke detector	CLIP	
2351TB	Photoelectric and thermal detector	CLIP	
2351BR	Photoelectric smoke detector, remote test	CLIP	
5351B	Fixed temperature heat detector	CLIP	
5351RB	Rate of Rise heat detector	CLIP	
5351H	High temperature heat detector	CLIP	
2351TIR	Photoelectric, thermal and IR detector	CLIP	
7351	High Sensitivity Smoke Detector	CLIP	
DNR	Photoelectric Duct Smoke Detector		
DNRW	Watertight Photoelectric Duct Smoke Detector		

Standard Bases			
Product Code	**Description**	**Protocol**	**Notes**
MPS-BB-PI	Manual Pull Station Backbox		

B300-6	6” base		Color - White
B300-6IV	6” base		Color - Ivory
B224BI-WH	Isolator Base		Color - White
B224BI-IV	Isolator Base		Color - Ivory
B224RB-WH	Relay Base		Color - White
B224RB-IV	Relay Base		Color - Ivory

Addressable Sounder Bases			
Product Code	**Description**	**Protocol**	**Notes**
B200SR-WH	Sounder base (T3 or continuous tone)	CLIP	Color - White
B200SR-IV	Sounder Base (T3 or continuous tone)	CLIP	Color - Ivory

Modules			
Product Code	**Description**	**Protocol**	**Notes**
M500MAP	Single Input Monitor Module	CLIP	Color - White
M500X	SLC Isolator Module	CLIP	
M501MAP	Single Input Miniature Monitor Module	CLIP	Color - White
M502MAP	Zone Monitor Module	CLIP	Color - White
M500DMAP	Dual Input Monitor Module	CLIP	Color - White
M500DMRAP	Dual Relay Monitor Module	CLIP	Color - White
M500RAP	Single DPDT Relay Module	CLIP	Color - White
M500SAP	Single Output Control Module	CLIP	Color - White
IM-10	10 Input Monitor Module	CLIP	
CR-6	6 Relay Control Module	CLIP	
SC-6	6 Supervised Control Module	CLIP	

Table 23-2: Intelligent Addressable SLC Devices

23.3 Document Change History

Issue Number	Description of Changes	Change Note	Author
Issue 1.0/v9.00 USA DRAFT Feb 2023	New Manual	CN3217	RJK
Issue 1.02/v9.02 USA DRAFT March 2024	Added Net2 Network section, various updates	CN3428	RJK
Issue 1.03/v9.03 USA May 2024	Minor corrections and updates	-	RJK
Issue 1.04/v9.04 USA May 2024	Napco Communicators ,Minor updates	CN3484	RJK/DW

24. PERTRONIC SALES AND TECHNICAL SUPPORT

USA
Pertronic Industries Inc

Phoenix
Corporate Office
16597 N. 92nd Street
Suite 110
Scottsdale, AZ 85260
Phone +1 480 452 8330
Keith.Bowler@pertronic.com
Doug.Woosley@pertronic.com

Guilford
Connecticut 06437
Phone +1 203 598 1133
Raymond.Krickmier@pertronic.com

USA website
www.pertronic.com

New Zealand
Pertronic Industries Limited

Head Office
17 Eastern Hutt Road
Wingate
Lower Hutt
Phone +64 4 5673229
Fax +64 4 5673644
sales@pertronic.co.nz

Auckland
3 Gloucester Park Road
Onehunga
Auckland 1061
Phone +64 9 633 0226
Fax +64 9 633 0228

New Zealand website
www.pertronic.co.nz

Australia
Pertronic Industries Pty Limited

Melbourne
Unit B2
2A Westall Rd
Springvale
VIC 3171
Phone +61 3 9562 7577
sales.vic@pertronic.com.au

Sydney
Unit 9
38 South Street
Rydalmere
NSW 2116
Phone +61 2 9638 7655
sales.nsw@pertronic.com.au

Brisbane
Unit 3
43-49 Sandgate Rd
Albion
QLD 4010
Phone +61 7 3255 2222
sales.qld@pertronic.com.au

Adelaide
65 Manton Street
Hindmarsh
SA 5007
Phone +61 8 8340 9533
sales.sa@pertronic.com.au

Perth
3/71 Beringarra Ave
Malaga
WA 6090
Phone +61 8 6555 3008
sales.wa@pertronic.com.au

Australian website
www.pertronic.com.au

PERTRONIC