TEST REPORT

Product Name	:	Electronic Cabinet Lock
Model Number	:	AA-00-264, GN-JOA1-0082, PZ-CUPR-DJAP, GN-JOA1-0081, GN-JOA1-0085, Jo-ECL, Johnn001, RFID-CL
FCC ID	:	2BAO2-LOCK

Prepared for	:	CHANG ZHOU SHI LIAN JI DIAN ZI CO LTD
Address	:	89 Hao, Huang He Dong Lu, Xin Bei Qu, Changzhou, Jiangsu, China
Prepared by	:	EMTEK (DONGGUAN) CO., LTD.
Address	:	-1&2F., Building 2, Zone A, Zhongda Marine Biotechnology Research and Development Base, No. 9, Xincheng Avenue, Songshanhu High-technology Industrial Development Zone, Dongguan, Guangdong, China Tel : +86-0769-22807078 Fax: +86-0769-22807079

Report Number	:	EDG2212120263E00401R
Date(s) of Tests	:	December 12, 2022 to March 28, 2023
Date of issue	:	March 29, 2023

Table of Contents

1 EUT TECHNICAL DESCRIPTION 4
2 SUMMARY OF TEST RESULT 5
3 TEST METHODOLOGY 6
3.1 GENERAL DESCRIPTION OF APPLIED STANDARDS 6
3.2 MEASUREMENT EQUIPMENT USED 6
3.3 DESCRIPTION OF TEST MODES 7
4 FACILITIES AND ACCREDITATIONS 8
4.1 FACILITIES 8
4.2 LABORATORY ACCREDITATIONS AND LISTINGS 8
5 TEST SYSTEM UNCERTAINTY 9
6 SETUP OF EQUIPMENT UNDER TEST 10
6.1 RADIO FREQUENCY TEST SETUP 1 10
6.2 RADIO FREQUENCY TEST SETUP 2 10
6.3 CONDUCTED EMISSION TEST SETUP 11
6.4 BLOCK DIAGRAM CONFIGURATION OF TEST SYSTEM 12
6.5 SUPPORT EQUIPMENT 12
7 TEST REQUIREMENTS 13
7.1 OCCUPIED BANDWIDTH 13
7.2 FREQUENCY STABILITY 15
7.3 RADIATED SPURIOUS EMISSION 17
7.4 CONDUCTED EMISSION TEST 24
8 ANTENNA APPLICATION 25
8.2 RESULT 25

TEST RESULT CERTIFICATION

Applicant	:	CHANG ZHOU SHI LIAN JI DIAN ZI CO LTD
Address	:	89 Hao, Huang He Dong Lu, Xin Bei Qu, Changzhou, Jiangsu, China
Manufacturer	:	CHANG ZHOU SHI LIAN JI DIAN ZI CO LTD
Address	:	89 Hao, Huang He Dong Lu, Xin Bei Qu, Changzhou, Jiangsu, China
EUT	:	Electronic Cabinet Lock
Model Name	:	AA-00-264, GN-JOA1-0082, PZ-CUPR-DJAP, GN-JOA1-0081, GN-JOA1-0085, Jo-ECL, Johnn001, RFID-CL
Trademark	:	N/A

Measurement Procedure Used:

APPLICABLE STANDARDS	
STANDARD	**TEST RESULT**
FCC 47 CFR Part 2, Subpart J FCC 47 CFR Part 15, Subpart C	PASS

The above equipment was tested by EMTEK (DONGGUAN) CO., LTD. The test data, data evaluation, test procedures, and equipment configurations shown in this report were made in accordance with the procedures given in ANSI C63.10 (2013) and the energy emitted by the sample EUT tested as described in this report is in compliance with the requirements of FCC Rules Part 2 and Part 15.225.

The test results of this report relate only to the tested sample identified in this report.

Date of Test : December 12, 2022 to March 28, 2023

Prepared by : Warren Deng
Warren deng /Engineer

Reviewer : Tim Dong
Tim Dong /Supervisor

Approved & Authorized Signer : Sam Lv
Sam Lv /Manager

EMTEK (DONGGUAN) CO., LTD. TESTING

1 EUT TECHNICAL DESCRIPTION

Characteristics	Description
Product Name:	Electronic Cabinet Lock
Model number:	AA-00-264, GN-JOA1-0082, PZ-CUPR-DJAP, GN-JOA1-0081, GN-JOA1-0085, Jo-ECL, Johnn001, RFID-CL (Note: The PCB schematic diagram and PCB Layout etc. of all models are the same. The only difference is that the product names are named differently. We prepared model Jo-ECL for EMC test.)
Sample number:	1#
Modulation:	ASK modulation
Operating Frequency Range(s):	13.553-13.567 MHz
Channel Frequency:	13.56MHz
Max Transmit Power:	70.57 dBμV/m
Number of Channels:	1 channel
Antenna Type :	Coil Antenna
Antenna Gain:	0.0 dBi
Power supply:	☒: DC6V for Battery
Temperature Range:	-10°C ~ +60°C
Date of Received:	December 12, 022

Note: *for more details, please refer to the User's manual of the EUT.*

2 SUMMARY OF TEST RESULT

FCC Part Clause	Test Parameter	Verdict	Remark
2.1049	Occupied Bandwidth	PASS	
15.225(e)	Frequency stability	PASS	
15.225(d) 15.209	Radiated Spurious Emissions	PASS	
15.207	Conducted Emission	PASS	
NOTE1: N/A (Not Applicable)			

RELATED SUBMITTAL(S) / GRANT(S):

This submittal(s) (test report) is intended for FCC ID: 2BAO2-LOCK filing to comply with Section 15.225 of the FCC Part 15, Subpart C Rules.

3 TEST METHODOLOGY

3.1 GENERAL DESCRIPTION OF APPLIED STANDARDS

According to its specifications, the EUT must comply with the requirements of the following standards:
FCC 47 CFR Part 2, Subpart J
FCC 47 CFR Part 15, Subpart C

3.2 MEASUREMENT EQUIPMENT USED

3.2.1 Radiated Emission Test Equipment

Equipment	Manufacturer	Model No.	Serial No.	Last Cal.	Cal. Interval
EMI Test Receiver	Rohde & Schwarz	ESCI	101415	2022/05/19	1Year
Power Amplifier	HP	8447F	OPTH64	2022/05/19	1Year
Bilog Antenna	Schwarzbeck	VULB9163	141	2022/05/22	1Year
Horn antenna	Schwarzbeck	BBHA9120D	1272	2022/05/22	1Year
Power Amplifier	LUNAR EM	LNA1G18-40	J10100000081	2022/05/19	1Year
Loop Antenna	Schwarzbeck	FMZB1513	1513-60	2022/05/22	2 Year
Signal Analyzer	R&S	FSV30	103039	2022/05/19	1Year
Bilog Antenna	Schwarzbeck	VULB9163	141	2022/05/22	1Year
Band reject Filter(50dB)	WI/DE	WRCGV-2400(2400-2485MHz)	2	2022/05/20	1 Year

3.2.2 Radio Frequency Test Equipment

Equipment	Manufacturer	Model No.	Serial No.	Last Cal.	Cal. Interval
Wireless Connectivity Tester	R&S	CMW270	102543	2022/06/21	1Year
Automatic Control Unit	Tonscend	JS0806-2	21I8060480	2022/06/21	1Year
Signal Analyzer	KEYSIGHT	N9010B	MY60242456	2022/06/21	1Year
Analog Signal Generator	KEYSIGHT	N5173B	MY61252625	2022/06/21	1Year
UP/DOWN-Converter	R&S	CMW-Z800A	100274	2022/06/21	1Year
Vector Signal Generator	KEYSIGHT	N5182B	MY61252674	2022/06/21	1Year
Frequency Extender	KEYSIGHT	N5182BX07	MY59362541	2022/06/21	1Year
Temperature&Humidity test chamber	ESPEC	EL-02KA	12107166	2022/06/21	1 Year

Remark: *Each piece of equipment is scheduled for calibration once a year.*

3.3 DESCRIPTION OF TEST MODES

The EUT has been tested under its typical operating condition.
The EUT configuration for testing is installed on RF field strength measurement to meet the Commissions requirement and operating in a manner which intends to maximize its emission characteristics in a continuous normal application.
The Transmitter was operated in the normal operating mode. The TX frequency was fixed which was for the purpose of the measurements.

Pre-defined engineering program for regulatory testing used to control the EUT for staying in continuous transmitting mode is programmed.

Test Frequency and Channel list:

Lowest Frequency		Middle Frequency		Highest Frequency	
Channel	Frequency (MHz)	Channel	Frequency (MHz)	Channel	Frequency (MHz)
/	/	1	13.56	/	/

4 FACILITIES AND ACCREDITATIONS

4.1 FACILITIES

All measurement facilities used to collect the measurement data are located at

EMTEK (Dongguan) Co., Ltd.
-1&2/F.,Building 2, Zone A, Zhongda Marine Biotechnology Research and Development Base, No.9, Xincheng Avenue, Songshanhu High-technology Industrial Development Zone, Dongguan, Guangdong, China
The sites are constructed in conformance with the requirements of ANSI C63.7, ANSI C63.10 and CISPR Publication 32.

4.2 LABORATORY ACCREDITATIONS AND LISTINGS

Site Description		
EMC Lab.	:	Accredited by CNAS, 2020.08.27 The certificate is valid until 2024.07.05 The Laboratory has been assessed and proved to be in compliance with CNAS-CL01:2018 The Certificate Registration Number is L3150 Accredited by FCC Designation Number: CN1300 Test Firm Registration Number: 945551 Accredited by A2LA, April 05, 2021 The Certificate Registration Number is 4321.02 Accredited by Industry Canada The Certificate Registration Number is CN0113
Name of Firm	:	EMTEK (DONGGUAN) CO., LTD.
Site Location	:	-1&2/F.,Building 2, Zone A, Zhongda Marine Biotechnology Research and Development Base, No.9, Xincheng Avenue, Songshanhu High-technology Industrial Development Zone, Dongguan, Guangdong, China

5 TEST SYSTEM UNCERTAINTY

The following measurement uncertainty levels have been estimated for tests performed on the apparatus:

Parameter	Uncertainty
Radio Frequency	±1x10^-5
Conducted Emissions Test	±2.0dB
Radiated Emission Test	±2.0dB
Occupied Bandwidth Test	±1.0dB
All emission, radiated	±3dB
Temperature	±0.5℃
Humidity	±3%

Measurement Uncertainty for a level of Confidence of 95%

6 SETUP OF EQUIPMENT UNDER TEST

6.1 RADIO FREQUENCY TEST SETUP 1

The component's antenna ports(s) of the EUT are connected to the measurement instrument per an appropriate attenuator. The EUT is controlled by PC/software to emit the specified signals for the purpose of measurements.

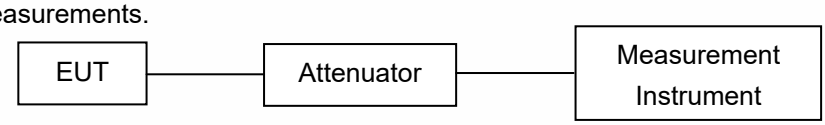

6.2 RADIO FREQUENCY TEST SETUP 2

The test site semi-anechoic chamber has met the requirement of NSA tolerance 4 dB according to the standards: ANSI C63.10. The test distance is 3m.The setup is according to the requirements in Section 13.1.4.1 of ANSI C63.10-2013 and CAN/CSA-CEI/IEC CISPR 22.

Below 30MHz：
The EUT is placed on a turntable 0.8 meters above the ground in the chamber, 3 meter away from the antenna (loop antenna). The Antenna should be positioned with its plane vertical at the specified distance from the EUT and rotated about its vertical axis for maximum response at each azimuth about the EUT. The center of the loop shall be 1 m above the ground. For certain applications, the loop antenna plane may also need to be positioned horizontally at the specified distance from the EUT.

Above 30MHz：
The EUT is placed on a turntable 0.8 meters above the ground in the chamber, 3 meter away from the antenna. The maximal emission value is acquired by adjusting the antenna height, polarisation and turntable azimuth. Normally, the height range of antenna is 1 m to 4 m, the azimuth range of turntable is 0° to 360°, and the receive antenna has two polarizations Vertical (V) and Horizontal (H).

(a) Radiated Emission Test Set-Up, Frequency Below 30MHz

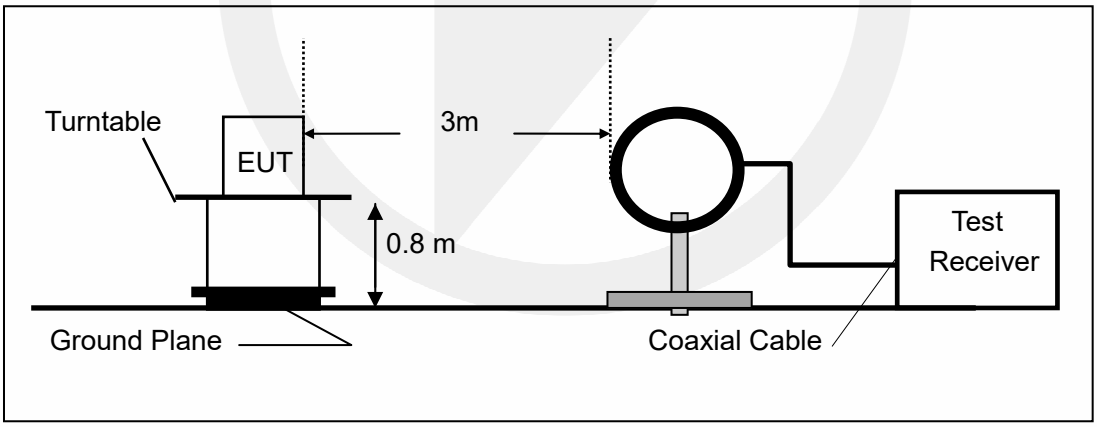

(b) Radiated Emission Test Set-Up, Frequency Below 1000MHz

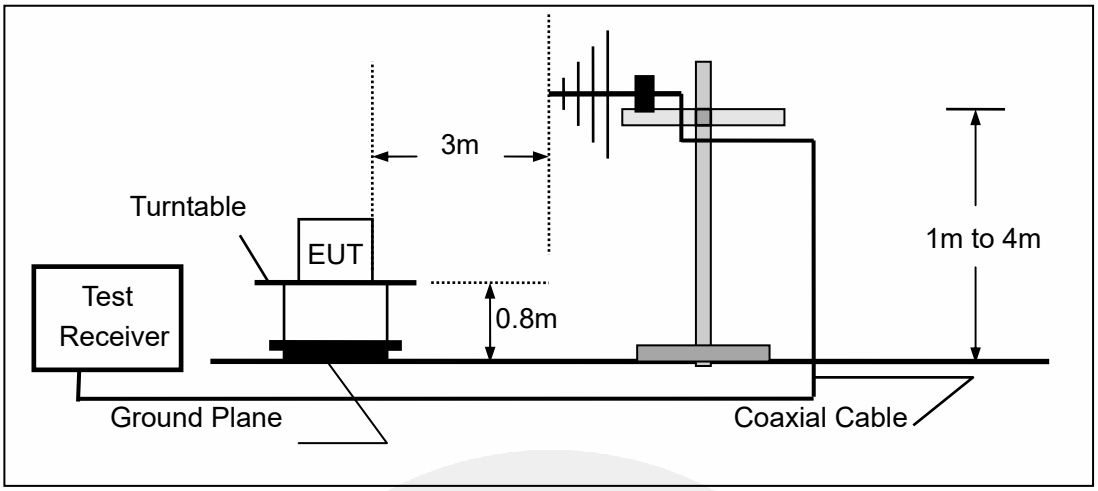

6.3 CONDUCTED EMISSION TEST SETUP

The mains cable of the EUT (maybe per AC/DC Adapter) must be connected to LISN. The LISN shall be placed 0.8 m from the boundary of EUT and bonded to a ground reference plane for LISN mounted on top of the ground reference plane. This distance is between the closest points of the LISN and the EUT. All other units of the EUT and associated equipment shall be at least 0.8m from the LISN.
Ground connections, where required for safety purposes, shall be connected to the reference ground point of the LISN and, where not otherwise provided or specified by the manufacturer, shall be of same length as the mains cable and run parallel to the mains connection at a separation distance of not more than 0.1 m.
According to the requirements in ANSI C63.10-2013 Conducted emissions from the EUT measured in the frequency range between 0.15 MHz and 30 MHz using CISPR Quasi-Peak and average detector mode.

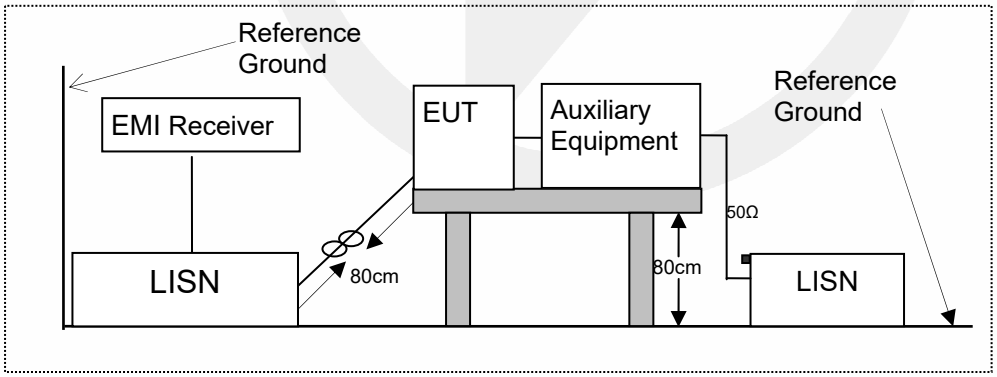

6.4 BLOCK DIAGRAM CONFIGURATION OF TEST SYSTEM

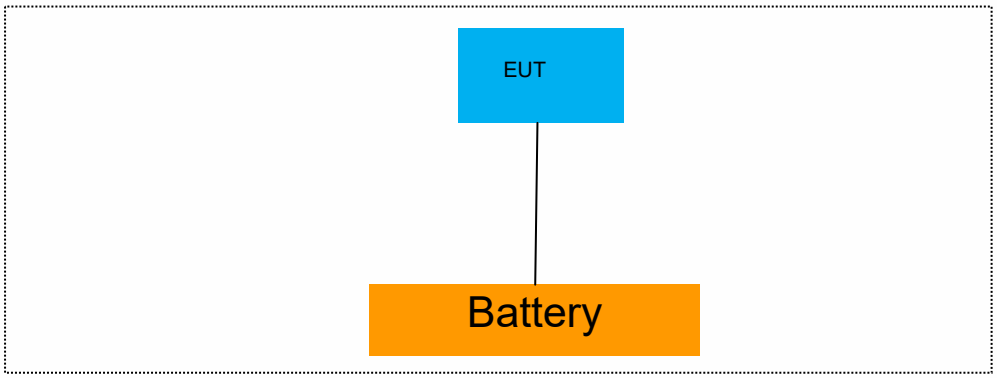

6.5 SUPPORT EQUIPMENT

EUT Cable List and Details			
Cable Description	Length (m)	Shielded/Unshielded	With / Without Ferrite
/	/	/	/

Auxiliary Cable List and Details			
Cable Description	Length (m)	Shielded/Unshielded	With / Without Ferrite
/	/	/	/

Auxiliary Equipment List and Details			
Description	Manufacturer	Model	Serial Number
/	/	/	/

Notes:

1. *All the equipment/cables were placed in the worst-case configuration to maximize the emission during the test.*
2. *Grounding was established in accordance with the manufacturer's requirements and conditions for the intended use.*
3. *Unless otherwise denoted as EUT in 『Remark』 column , device(s) used in tested system is a support equipment*

7 TEST REQUIREMENTS

7.1 OCCUPIED BANDWIDTH

7.1.1 Applicable Standard

According to FCC Part 2.1049

7.1.2 Conformance Limit

No limit requirement.

7.1.3 Test Configuration

Test according to clause 6.1 radio frequency test setup 1

7.1.4 Test Procedure

The EUT was operating in transmit mode and controlled its channel. Printed out the test result from the spectrum by hard copy function.
The RF output of EUT was connected to the spectrum analyzer by RF cable and attenuator. The path loss was compensated to the results for each measurement.
Set to the maximum power setting and enable the EUT transmit continuously
Set RBW = 1-5% occupied bandwidth
Set the video bandwidth (VBW) =3 times RBW .
Set Span= approximately 2 to 3 times the occupied bandwidth
Set Detector = Peak.
Set Trace mode = max hold.
Set Sweep = auto couple.

Measure and record the results in the test report.

7.1.5 Test Results

Temperature :	25℃	Test Date :	
Humidity :	65 %	Test By:	Lucsa xu

Modulation Mode	Channel Number	Channel Frequency (MHz)	-20dB Measurement Bandwidth (kHz)	Limit (kHz)	Verdict
ASK	1	13.56	25.14	N/A	PASS
Note: N/A (Not Applicable)					

Test Model	Occupied Bandwidth Channel 0: 13.56MHz	ASK Modulation

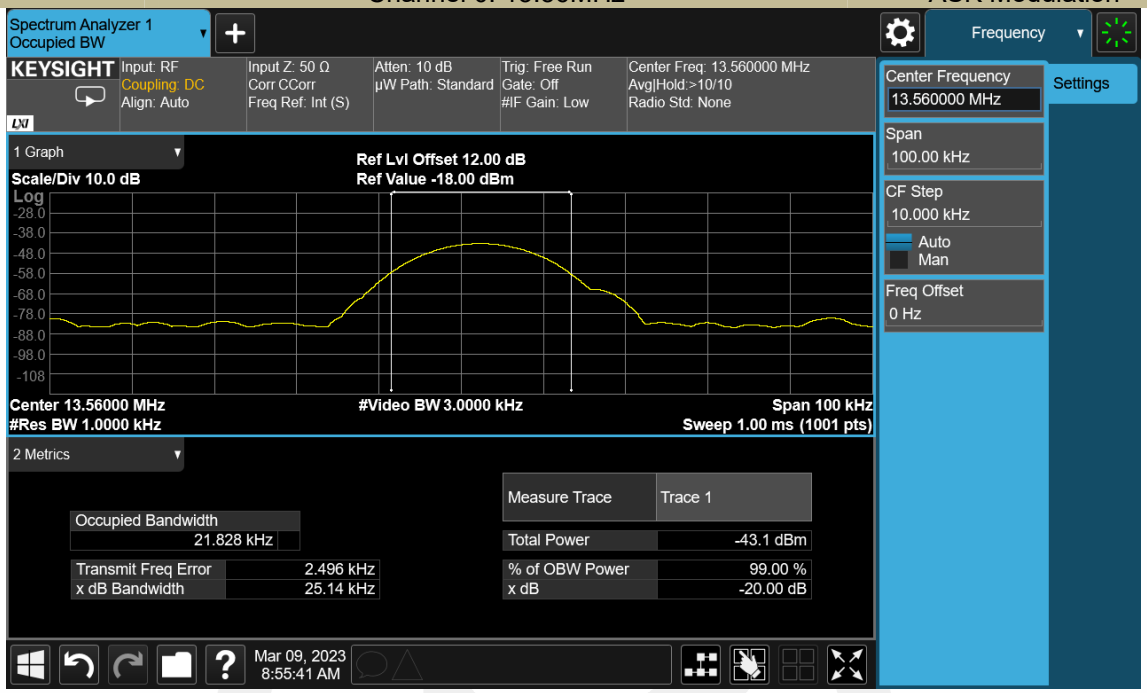

7.2 FREQUENCY STABILITY

7.2.1 Applicable Standard

According to FCC Part 2.1055

7.2.2 Conformance Limit

According to part 15.225(e),The frequency tolerance of the carrier signal shall be maintained within ±0.01% of the operating frequency over a temperature variation of −20 degrees to +50 degrees C at normal supply voltage, and for a variation in the primary supply voltage from 85% to 115% of the rated supply voltage at a temperature of 20 degrees C. For battery operated equipment, the equipment tests shall be performed using a new battery.

7.2.3 Test Configuration

Test according to clause 6.1 radio frequency test setup

7.2.4 Test Procedures

Connect the EUT to frequency analyzer via the antenna connector.
EUT was placed at temperature chamber and connected to an external power supply.
Temperature and voltage condition shall be tested to confirm frequency stability.
(a) Frequency measurements shall be made at the extremes of the specified temperature range and at intervals of not more than 10° centigrade through the range. A period of time sufficient to stabilize all of the components of the oscillator circuit at each temperature level shall be allowed prior to frequency measurement. The short-term transient effects on the frequency of the transmitter due to keying (except for broadcast transmitters) and any heating element cycling normally occurring at each ambient temperature level also shall be shown. Only the portion or portions of the transmitter containing the frequency determining and stabilizing circuitry need be subjected to the temperature variation test.
(b) The frequency stability shall be measured with variation of primary supply voltage as follows:
(1) Vary primary supply voltage from 85 to 115 percent of the nominal value for other than hand carried battery equipment.
(2) For hand carried, battery powered equipment, reduce primary supply voltage to the battery operating end point, which shall be specified by the manufacturer.

7.2.5 Test Results

Operation Mode	Channel Number	Test Condition		Channel Frequency (MHz)	Freq.Dev. (KHz)	Deviation (ppm)	Limit (ppm)
		Voltage (V)	Temp (℃)				
ASK	CH0	Vnom	-20	13.55998	-0.02	-1.47	10
			-10	13.56005	0.05	3.69	10
			0	13.55998	-0.02	-1.47	10
			10	13.56003	0.03	2.21	10
			20	13.55999	-0.01	-0.74	10
			30	13.56002	0.02	1.47	10
			40	13.55997	-0.03	-2.21	10
			50	13.55996	-0.04	-2.95	10
		85% Vnom	20	13.55999	-0.01	-0.74	10
		115% Vnom	20	13.56003	0.03	2.21	10
VERDICT				PASS			

7.3 RADIATED SPURIOUS EMISSION

7.3.1 Applicable Standard

According to FCC Part 15.225 and 15.209

7.3.2 Conformance Limit

Field Strength of Fundamental Emissions and Spectrum Mask					
Emissions	**(uV/m)@30m**	**(dBuV/m)@30m**	**(dBuV/m)@10m**	**(dBuV/m)@3m**	**(dBuV/m)@1m**
Fundamental	15848	84.0	103.1	**124.0**	143.1
Quasi peak measurement of the fundamental.					

Spectrum Mask					
Freq. of Emission (MHz)	**(uV/m)@30m**	**(dBuV/m)@30m**	**(dBuV/m)@10m**	**(dBuV/m)@3m**	**(dBuV/m)@1m**
1.705~13.110	30	29.5	48.6	**69.5**	88.6
13.110~13.410	106	40.5	59.6	**80.5**	99.6
13.410~13.553	334	50.5	69.6	**90.5**	109.6
13.553~13.567	15848	84.0	103.1	**124.0**	143.1
13.567~13.710	334	50.5	69.6	**90.5**	109.6
13.710~14.010	106	40.5	59.6	**80.5**	99.6
14.010~30.000	30	29.5	48.6	**69.5**	88.6

According to FCC Part15.209, Restricted bands

MHz	MHz	MHz	GHz
0.090-0.110	16.42-16.423	399.9-410	4.5-5.15
10.495-0.505	16.69475-16.69525	608-614	5.35-5.46
2.1735-2.1905	16.80425-16.80475	960-1240	7.25-7.75
4.125-4.128	25.5-25.67	1300-1427	8.025-8.5
4.17725-4.17775	37.5-38.25	1435-1626.5	9.0-9.2
4.20725-4.20775	73-74.6	1645.5-1646.5	9.3-9.5
6.215-6.218	74.8-75.2	1660-1710	10.6-12.7
6.26775-6.26825	123-138	2200-2300	14.47-14.5
8.291-8.294	149.9-150.05	2310-2390	15.35-16.2
8.362-8.366	156.52475-156.52525	2483.5-2500	17.7-21.4
8.37625-8.38675	156.7-156.9	2690-2900	22.01-23.12
8.41425-8.41475	162.0125-167.17	3260-3267	23.6-24.0
12.29-12.293	167.72-173.2	3332-3339	31.2-31.8
12.51975-12.52025	240-285	3345.8-3358	36.43-36.5
12.57675-12.57725	322-335.4	3600-4400	(2)
13.36-13.41			

According to FCC Part15.205, the level of any transmitter spurious emission in Restricted bands shall not exceed the level of the emission specified in the following table

Restricted Frequency(MHz)	Field Strength (μV/m)	Field Strength (dBμV/m)	Measurement Distance
0.009-0.490	2400/F(KHz)	48.5 - 13.8	300
0.490-1.705	24000/F(KHz)	33.8 – 23.0	30
1.705-30	30	29.5	30
30-88	100	40.0	3
88-216	150	43.5	3
216-960	200	46.0	3
Above 960	500	54.0	3

7.3.3 Test Configuration

Test according to clause 6.2 radio frequency test setup 2

7.3.4 Test Procedure

This test is required for any spurious emission that falls in a Restricted Band, as defined in Section 15.205. It must be performed with the highest gain of each type of antenna proposed for use with the EUT. Use the following spectrum analyzer settings:
The EUT was placed on a turn table which is 0.8m above ground plane.
Maximum procedure was performed on the highest emissions to ensure EUT compliance.
Span = wide enough to fully capture the emission being measured
RBW = 100 kHz for f < 1 GHz(30MHz to 1GHz), 200Hz for f<150KHz(9KHz to 150KHz), 9KHz for f<30MHz(150KHz to 30KHz)
VBW ≥ RBW
Sweep = auto
Detector function = peak
Trace = max hold
Follow the guidelines in ANSI C63.10-2013 with respect to maximizing the emission by rotating the EUT, measuring the emission while the EUT is situated in three orthogonal planes (if appropriate), adjusting the measurement antenna height and polarization, etc. A pre-amp and a high pass filter are required for this test, in order to provide the measuring system with sufficient sensitivity. Allow the trace to stabilize. The peak reading of the emission, after being corrected by the antenna factor, cable loss, pre-amp gain, etc., is the peak field strength, which must comply with the limit specified in Section 15.35(b). Submit this data.
Now set the VBW to 10 Hz, while maintaining all of the other instrument settings. This peak level, once corrected, must comply with the limit specified in Section 15.209. If the dwell time per channel of the hopping signal is less than 100 ms, then the reading obtained with the 10 Hz VBW may be further adjusted by a “duty cycle correction factor”, derived from 20log(dwell time/100 ms), in an effort to demonstrate compliance with the 15.209 limit. Submit this data.
Repeat above procedures until all frequency measured was complete.

7.3.5 Test Results

■ Field Strength of Fundamental Emissions and Spectrum Mask

Project Information			
Mode:	TX	Voltage:	DC 6V
Environment:	Temp: 19℃; Humi:62%	Engineer:	Jackson Xue

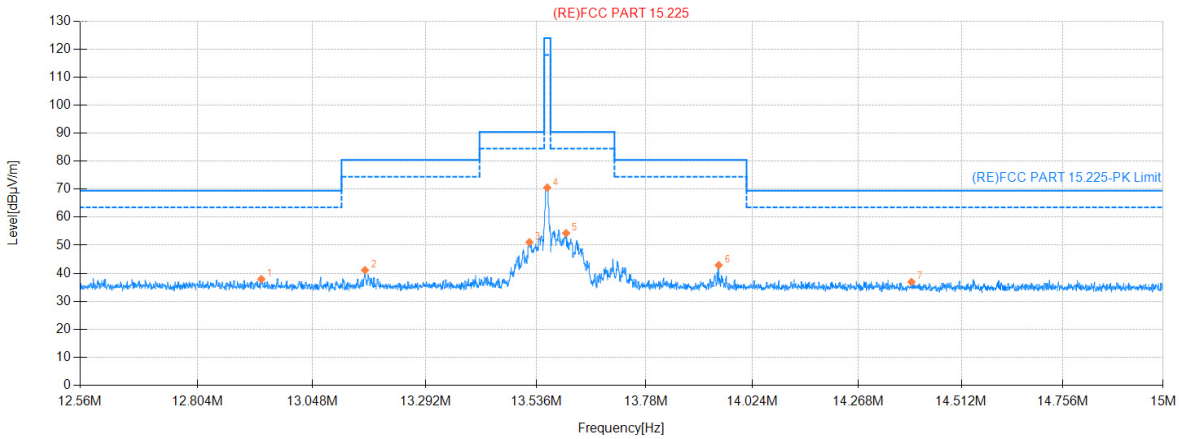

Final Data List									
NO.	Freq. [MHz]	QP Reading [dBμV/m]	Factor [dB]	QP Value [dBμV/m]	QP Limit [dBμV/m]	QP Margin [dB]	Angle [°]	Polarity	Verdict
1	12.9388	17.99	19.89	37.88	69.50	31.62	82	/	PASS
2	13.1604	21.21	19.88	41.09	80.50	39.41	14	/	PASS
3	13.5201	31.24	19.82	51.06	90.50	39.44	64	/	PASS
4	13.5596	50.75	19.82	70.57	124.00	53.43	337	/	PASS
5	13.6016	34.50	19.81	54.31	90.50	36.19	49	/	PASS
6	13.9462	23.11	19.76	42.87	80.50	37.63	30	/	PASS

■ Spurious Emission below 150kHz (9KHz to 150kHz)

Temperature:	24℃	Test Date:	
Humidity:	53 %	Test By:	KK
Test mode:	TX Mode		

Freq. (MHz)	Ant.Pol. H/V	Emission Level(dBuV/m)		Limit 3m(dBuV/m)		Over(dB)	
		PK	AV	PK	AV	PK	AV
--	--	--	--	--	--	--	--

Note: the amplitude of spurious emission that is attenuated by more than 20dB below the permissible limit has no need to be reported.
Distance extrapolation factor =40log(Specific distance/ test distance)(dB);
Limit line=Specific limits(dBuV) + distance extrapolation factor

■ Spurious Emission below 30MHz (150KHz to 30MHz)
All mode have been tested, and the worst result was report as below:

Project Information			
Mode:	TX	Voltage:	DC 6V
Environment:	Temp: 25℃; Humi:60%	Engineer:	JACK ZHANG

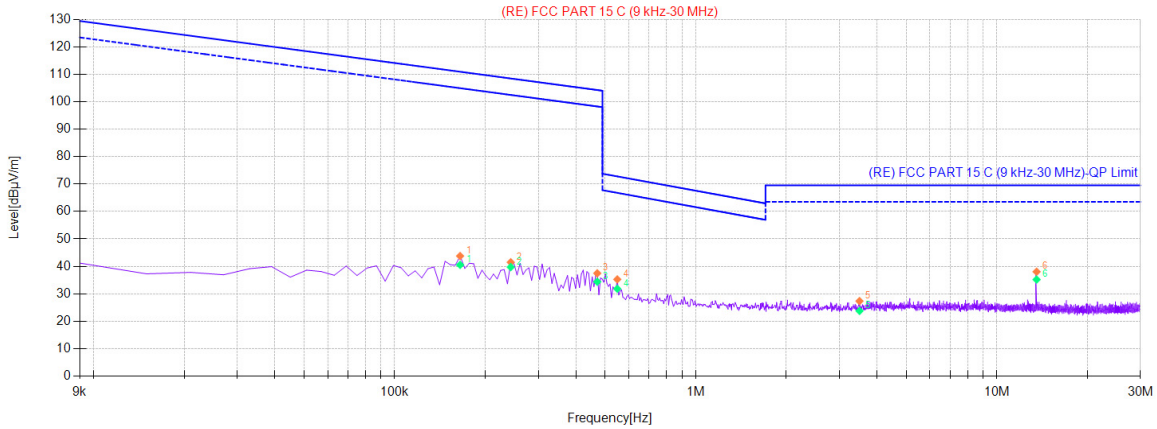

PK Final Data List								
NO.	Freq. [MHz]	PK Reading [dBµV/m]	Factor [dB]	PK Value [dBµV/m]	PK Limit [dBµV/m]	PK Margin [dB]	Polarity	Verdict
1	0.165	23.57	20.19	43.76	111.01	67.25	/	PASS
2	0.243	21.34	20.15	41.49	108.54	67.05	/	PASS
3	0.471	17.44	20.02	37.46	104.33	66.87	/	PASS
4	0.5489	15.22	20.02	35.24	72.81	37.57	/	PASS
5	3.5007	7.49	19.83	27.32	69.54	42.22	/	PASS
6	13.5616	18.22	19.82	38.04	69.54	31.50	/	PASS

AV Final Data List								
NO.	Freq. [MHz]	AV Reading [dBµV/m]	Factor [dB]	AV Value [dBµV/m]	AV Limit [dBµV/m]	AV Margin [dB]	Polarity	Verdict
1	0.165	20.34	20.19	40.53	111.01	70.48	/	PASS
2	0.243	19.57	20.15	39.72	108.54	68.82	/	PASS
3	0.471	14.36	20.02	34.38	104.33	69.95	/	PASS

■ Spurious Emission Above 30MHz (30MHz to 1GHz)

Project Information			
Mode:	TX	Voltage:	DC 6V
Environment:	Temp: 25℃; Humi:60%	Engineer:	JACK ZHANG

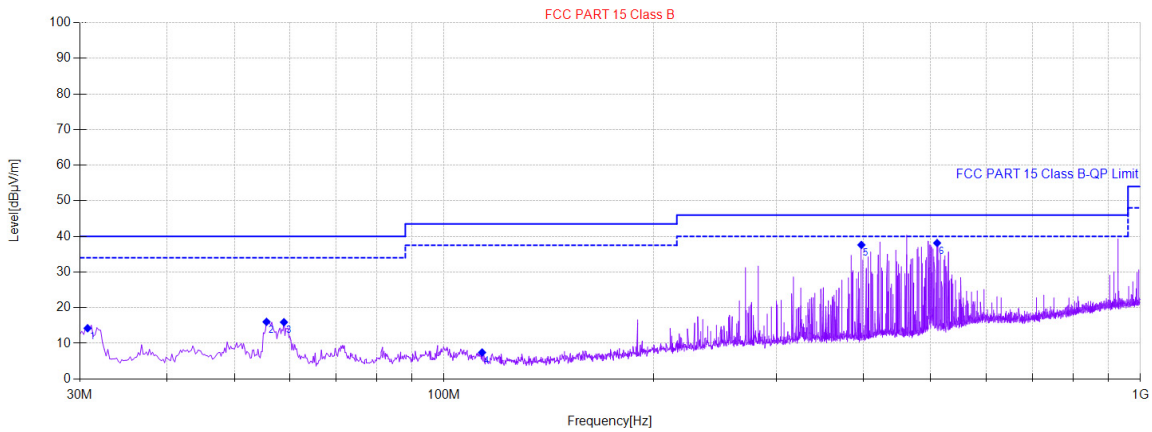

Final Data List										
NO.	Freq. [MHz]	QP Reading [dBμV/m]	Factor [dB]	QP Value [dBμV/m]	QP Limit [dBμV/m]	QP Margin [dB]	Height [cm]	Angle [°]	Polarity	Verdict
1	30.776	45.93	-31.71	14.22	40.00	25.78	110	136	Vertical	PASS
2	55.613	47.30	-31.27	16.03	40.00	23.97	100	10	Vertical	PASS
3	58.912	47.83	-31.90	15.93	40.00	24.07	120	258	Vertical	PASS
4	113.437	39.62	-32.19	7.43	43.50	36.07	100	258	Vertical	PASS
5	397.510	64.19	-26.58	37.61	46.00	8.39	100	39	Vertical	PASS
6	510.634	61.26	-23.11	38.15	46.00	7.85	100	42	Vertical	PASS

Project Information			
Mode:	TX	Voltage:	DC 6V
Environment:	Temp: 25℃; Humi:60%	Engineer:	JACK ZHANG

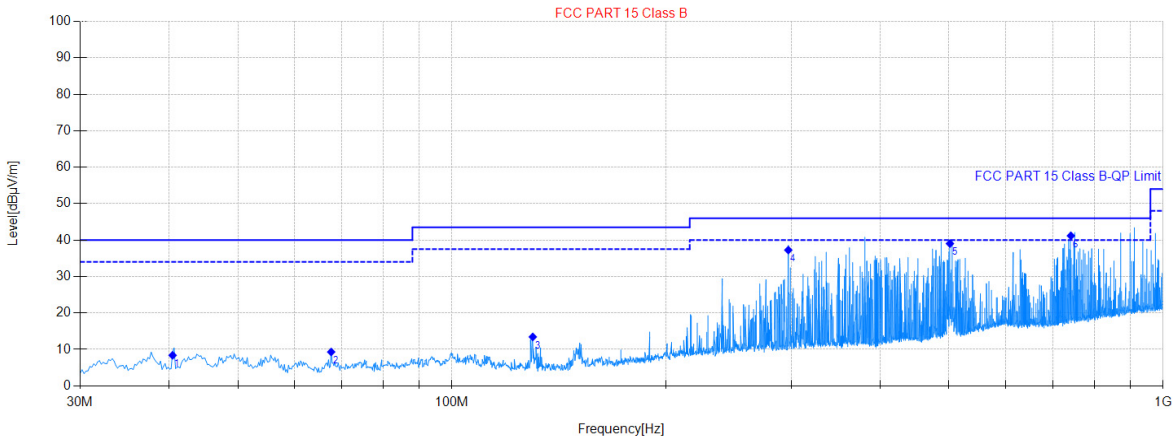

Final Data List										
NO.	Freq. [MHz]	QP Reading [dBμV/m]	Factor [dB]	QP Value [dBμV/m]	QP Limit [dBμV/m]	QP Margin [dB]	Height [cm]	Angle [°]	Polarity	Verdict
1	40.478	39.46	-31.08	8.38	40.00	31.62	100	266	Horizontal	PASS
2	67.644	41.86	-32.55	9.31	40.00	30.69	200	31	Horizontal	PASS
3	129.930	47.04	-33.60	13.44	43.50	30.06	100	19	Horizontal	PASS
4	297.191	65.65	-28.39	37.26	46.00	8.74	100	210	Horizontal	PASS
5	501.514	62.36	-23.32	39.04	46.00	6.96	200	220	Horizontal	PASS
6	741.928	61.60	-20.42	41.18	46.00	4.82	100	189	Horizontal	PASS

7.4 CONDUCTED EMISSION TEST

7.4.1 Applicable Standard

According to FCC Part 15.207(a)

7.4.2 Conformance Limit

Conducted Emission Limit		
Frequency(MHz)	Quasi-peak	Average
0.15-0.5	66-56	56-46
0.5-5.0	56	46
5.0-30.0	60	50
Note: 1. The lower limit shall apply at the transition frequencies 2. The limit decreases in line with the logarithm of the frequency in the range of 0.15 to 0.50MHz.		

7.4.3 Test Configuration

Test according to clause 7.3 conducted emission test setup

7.4.4 Test Procedure

The EUT was placed on a table which is 0.8m above ground plane.
Maximum procedure was performed on the highest emissions to ensure EUT compliance.
Repeat above procedures until all frequency measured were complete.

7.4.5 Test Results

N/A.

8 ANTENNA APPLICATION

8.1.1 Antenna Requirement

Standard	Requirement
FCC CRF Part 15.203	An intentional radiator shall be designed to ensure that no antenna other than that furnished by the responsible party shall be used with the device. The use of a permanently attached antenna or of an antenna that uses a unique coupling to the intentional radiator shall be considered sufficient to comply with the provisions of this section. The manufacturer may design the unit so that a broken antenna can be replaced by the user, but the use of a standard antenna jack or electrical connector is prohibited. This requirement does not apply to carrier current devices or to devices operated under the provisions of §15.211, §15.213, §15.217, §15.219, or §15.221. Further, this requirement does not apply to intentional radiators that must be professionally installed, such as perimeter protection systems and some field disturbance sensors, or to other intentional radiators which, in accordance with §15.31(d), must be measured at the installation site. However, the installer shall be responsible for ensuring that the proper antenna is employed so that the limits in this part are not exceeded.

For intentional device, according to FCC 47 CFR Section 15.203, an intentional radiator shall be designed to ensure that no antenna other than that furnished by the responsible party shall be used with the device. if transmitting antennas of directional gain greater than 6dBi are used, the power shall be reduced by the amount in dB that the directional gain of the antenna exceeds 6dBi.

8.2 RESULT

The EUT has 1 antenna: a PCB antenna for 13.56 MHz TX model, the gain is 0 dBi;

☒ Antenna use a permanently attached antenna which is not replaceable.
☐ Not using a standard antenna jack or electrical connector for antenna replacement
☐ The antenna has to be professionally installed (please provide method of installation)

Which in accordance to section 15.203, please refer to the internal photos.