# TL-G30 Smart Robot Vacuum Cleaner
# User Manual

Please read this manual carefully before using the product, and keep it properly.

# Table of contents


Safety instruction 01

Product Introduction 02

Production Installation 05

Product Use 07

Product Maintenance 08

Common Problems 11

Troubleshooting 12

Basic parameters 13

FCC WARNING 13

# Safety instruction

## Use instructions

- This product is only used for floor cleaning in home environment, and should not be used in outdoor, non-floor, commercial or industrial environment.
- This product may not be used by people with physical, sensory or intellectual disabilities and people without relevant experience and knowledge (including children), unless there is a guardian’s care or guidance to ensure that they can use this product safely.
- Do not let children use the robot vacuum cleaner as a toy. When the robot vacuum cleaner works, please supervise children and pets to keep them away as far as possible.
- If the charging dock is damaged, it must be replaced with special components purchased from its manufacturer or maintenance department.
- Do not place children or pets and anything on the stationary or running robot vacuum cleaner.
- Do not place the cleaning brush in the area where children can touch it.
- Do not use it in suspended environments (such as duplex floors, open balconies and furniture tops) without protective fences.
- Do not use it in an environment where the temperature is higher than 35℃, lower than 0℃ or there are any liquids and sticky objects on the ground.
- Do not use it to clean any burning objects.
- Before use, please put away the wires on the floor of your home to avoid dragging when the robot vacuum cleaner is running.
- Please put away the fragile items, valuables and sundries (such as vases, plastic bags and mirrors, etc.) on the ground to avoid the damage of household items caused by the obstruction or slight collision of the main unit during operation.
- Do not let the robot vacuum cleaner suck hard objects or sharp objects (such as decoration waste, glass and nails, etc.).
- Do not use mopping mode on the carpet.
- Please clean and maintain the robot vacuum cleaner and charging dock in the power-off state.
- Do not turn the robot vacuum cleaner upside down on the ground for a long time.
- Do not wipe with wet cloth or wash the main unit and charging dock with any liquid.
- Please use this product according to the instructions in the manual or quick guide. Any loss caused by improper use shall be borne by the user.
- If it is needed to transport products, please ensure that the robot vacuum cleaner is turned off, and it is recommended to use the original packaging box for packaging protection.

# Safety instruction

## Battery and charging

• Do not use any third-party battery, charging dock or power adapter.
• Do not disassemble, repair or modify the battery or charging dock without permission.
• Do not place the charging dock near the heat source (such as radiator, etc.).
• Before scrapping this product, you must disconnect the power supply and take the battery out of the machine for environmental protection.
• If it is not used for a long time, please turn off the robot vacuum cleaner after being fully charged and put it in a cool and dry place.
It is recommended to charge at least once every three months to avoid battery damage.

## Instructions on environmental protection

The chemical substances contained in the built-in lithium-ion battery of this product will pollute the environment. Please dismantle it by professionals before scrapping it, and hand it over to a professional battery recycling agency for centralized disposal.

### Steps to disassemble the battery

The following information is only applicable when the robot vacuum cleaner is abandoned, not the daily operation instructions:

1. Let the robot vacuum cleaner run until it can't be cleaned with low power without touching the charging dock;
2. Turn off the robot vacuum cleaner;
3. Remove the screws of the battery pack of the robot vacuum cleaner;
4. Take out the battery pack and press the fastener to pull out the connector plug of the battery pack.

# Product Introduction

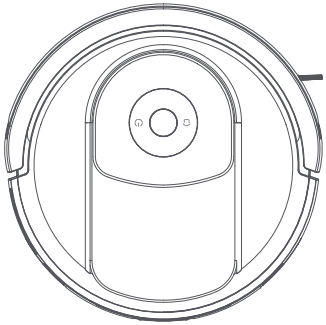

Main unit

## List of accessories

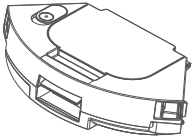

2-in-1 water tank

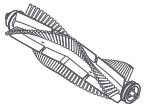

Main brush

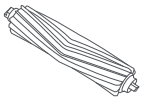

Rubber brush

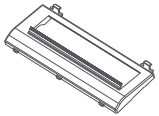

Main brush cover

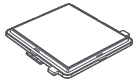

Filter screen ×2

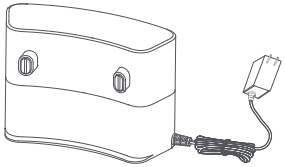

Charging dock

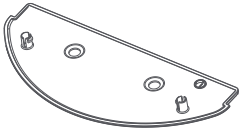

Mop bracket

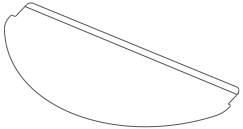

Mop×2

Side brush×2

Cleaning brush

User Manual

Quick Guide

Note: The illustrations of products, accessories and user interface in the manual are schematic diagrams for reference only. Due to the product updating and upgrading, there may be some differences between the physical products and the schematic drawings. Please take the physical products as the standard.

# Product Introduction

## Main unit

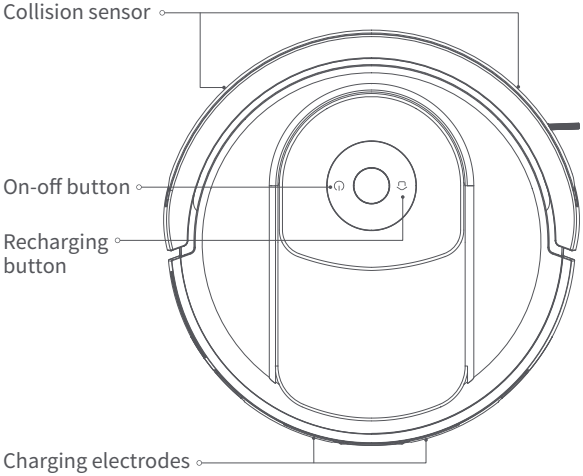


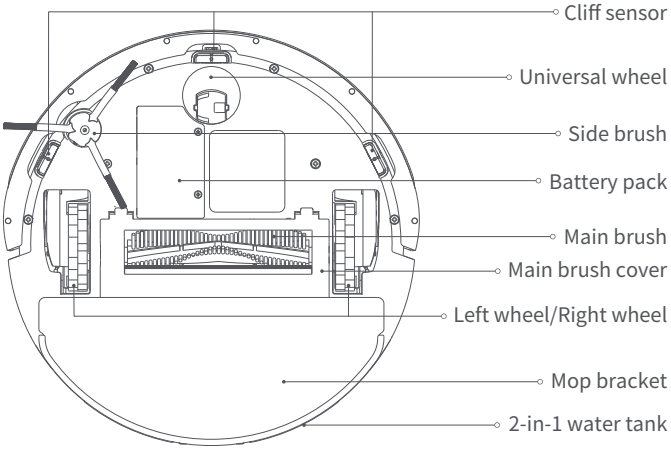


### On-off button

Press for a long period of time, powering-on or powering-off

Press for a short period of time, cleaning or pausing

### Recharging button

In operation, press for short time, main unit pauses

In pausing, press for short time, start recharging

In recharging, press for short time, stop recharging

+ , press for 3s to reset Wi-Fi to enter network configuration

## Description of button indicator status of the main unit

| | |
|---|---|
| White light is always on | Power-on is completed / normal work / charging is completed / standby |
| White light flashes | In recharging / connecting to the network / upgrading |
| Yellow light is always on | Not networking |
| Yellow light breaths | Charge when the power is lower than 20% |
| White light breaths | In charging / powering-on |
| Yellow light flashes | Reset Wi-Fi / Abnormal state |

# Product Introduction

## 2-in-1 water tank

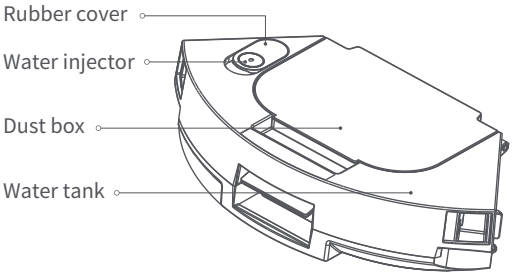


## Charging dock (against the wall)

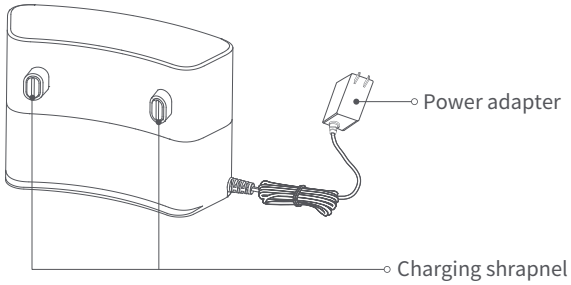


## Mop bracket

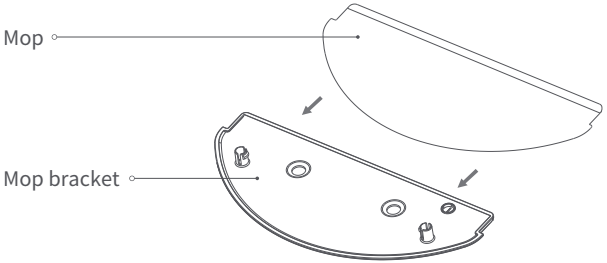

# Production Installation

## 1. Place the charging dock against a wall, and connect the power supply

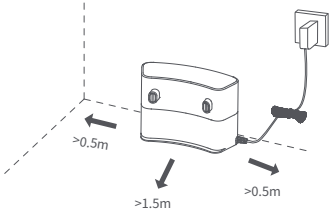


Tips:
• Do not expose the charging dock to direct sunlight.
• Make sure there is more than 1.5m space in front of the charging dock and more than 0.5m space on both sides.
• Pay attention to the power cord, otherwise it may be dragged by the robot, causing the charging dock to move or power off.

## 2. Remove the anti-collision protection strip and protective film

Before use, be sure to remove the anti-collision protection strips on both sides of the main machine.

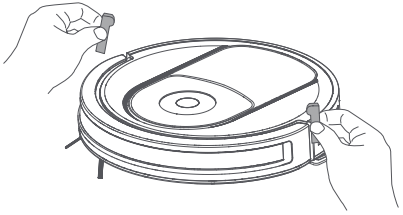

## 3. Power on and charging

At initial use, long press " ⏻ " button for 3 seconds to power on, and manually place the main unit onto the charging dock by aligning the pole piece with the charging electrode. In daily use, you can start intelligent recharging by directly pressing " ⌂ " button.

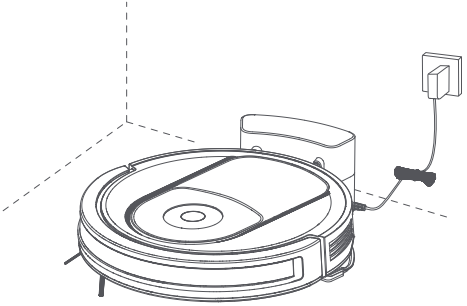

Tips:
• When main unit fails to power on due to low battery level, place it on charging dock for charging.
• The main unit will start up automatically after connected to the charging dock, and cannot be shut down during charging.

# Production Installation

## Installation of 2-in-1 water tank and mop bracket

1. Take out the 2-in-1 water tank, open the rubber cover of the 2-in-1 water tank, inject clean water into the water tank and fasten the rubber cover; soaking and water injection are forbidden.

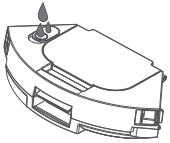

2. Put the wrung wet mop into the mop bracket and stick it on the hook and loop.

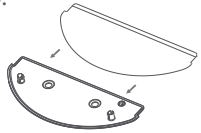

3. Align the positioning hole and install the mop bracket into the bottom of the 2-in-1 water tank according to the direction shown in the figure

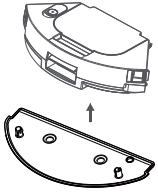

4. Install the 2-in-1 water tank into the main unit according to the direction shown in the figure, and confirm that the fastener is installed in place.

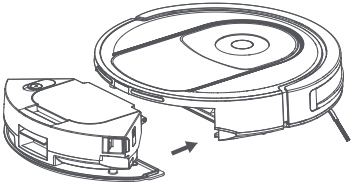

Tips:

- Do not inject hot water into the 2-in-1 water tank to avoid deformation of the water tank.
- It is forbidden to shower or soak the 2-in-1 water tank! It is forbidden to use cleaning products such as detergent, disinfectant and solid detergent to avoid corrosion and blockage of the 2-in-1 water tank.
- When injecting water, take out the 2-in-1 water tank separately, only clean water can be used, and the small water flow at the water injection port can be injected into the water tank.
- When using the mopping function, soak the mop cloth first, wring it until it doesn’t drip, and then install it on the mop bracket for use; after mopping the floor, please take out the 2-in-1 water tank and mop bracket in time, and pour out the remaining water in the water tank.
- Do not use the mopping function when no one is at home.
- Because of production inspection, there may be a small amount of water in the 2-in-1 water tank, which is a normal phenomenon.

# Product Use

## Power-On/Off

Press “⏻” for 3s, indicator light is on and the main unit is on. When the main unit is not charged and paused, press “⏻” for 3s to make it power-off.

## Vacuumming/Mopping

In the powered-on state, press the “⏻” button for short and the main unit will automatically enter the vacuumming/mopping state according to the installed accessories.

## Pause

When main unit is in operation, press any button to cease operation; press button “⏻” to continue sweeping; press button “⌂” to return it to Charging dock for charging and finish current sweeping task.

## Sleep

Unless during charging, the main unit will go to sleep automatically when it is left idle for 5 minutes, and power off automatically when it has slept for 6 hours. In sleep status, press any button will wake main unit up.

Tips: Main unit will not go to sleep when charging on the charging dock.

## Add water or clean mop to the 2-in-1 water tank halfway

If it is needed to add water or clean the mop during the cleaning process of the main unit, press any button for short to pause, then remove the 2-in-1 water tank to add water or clean the mop, and then put it back into the water tank and mop, and press the “⏻” button for short to continue working.

## Equipment recharge

In the power-on state, press the “⌂” button for short, and the main unit will enter the recharging mode; when the main unit is cleaned, it automatically enters the recharging mode, and the white indicator light flashes; when the power level of the main unit is too low during cleaning, it will recharge automatically.

## Reset Wi-Fi

IWhen the main unit is turned on, press and hold the “⏻” + “⌂” buttons for 3s until you hear a sound prompt, and when the indicator is in a yellow flashing state, it means that the WiFi reset is successful. Equipment network distribution: open the APP to add equipment, and follow the APP prompts.

Tips: Only Wi-Fi network in 2.4GHz frequency is available to this product.

## Edge Cleaning

Select edge cleaning in APP. After the main unit automatically identifies the cleaning area, it will be cleaned along the edge. After the cleaning, the main unit will automatically return to the charging dock.

## Fixed-point cleaning

Select fixed-point cleaning in the APP to start fixed-point cleaning. Take the current position of the main unit as the center for spiral cleaning, and clean the fixed-point area. After cleaning, return to the starting point, and then return to the charging dock.

## Scheduled cleaning

User can schedule a cleaning task in App, and main unit will start the cleaning task as scheduled and return to charging dock upon end of the task.

# Product Maintenance

## Cleaning of 2-in-1 water tank

1. Press the fastener on the left and right sides of the 2-in-1 water tank inward and pull it out horizontally from the main unit.

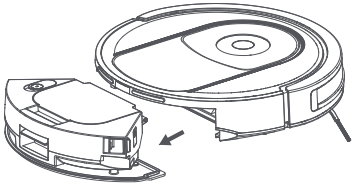

2. Open the dust box cover of the 2-in-1 water tank, pour out the garbage inside and clean the dust box with a cleaning brush.

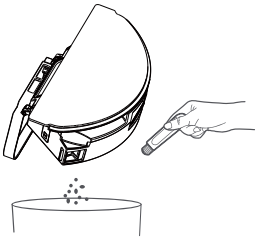

3. Open the rubber cover of the 2-in-1 water tank and pour out the remaining water in the water tank.

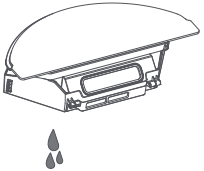

4. Install the 2-in-1 water tank back to the main unit.

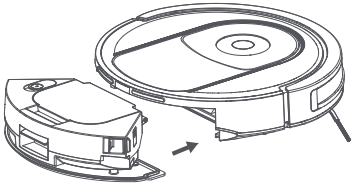

Prompt: After mopping the floor, please take out the water tank in time, pour out the remaining water in the water tank in time, clean the mop and dry it to avoid odor and mildew.

# Product Maintenance

## Mop bracket

Hold both sides of the mop bracket by hand, and vertically pull out the bottom of the 2-in-1 water tank according to the direction shown in the figure.

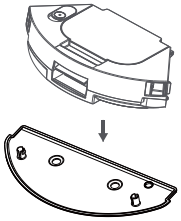

## Filter screen

Open the dust cover of the 2-in-1 water tank as shown in the figure, then press and hold both sides of the fastener to pull out the filter screen and clean it.

Tips:
- After washing the filter screen, please be sure to dry it before using it.
- In order to avoid blockage of the filter screen, it is recommended to clean the filter screen regularly.
- It is recommended to replace the filter screen every 3 months.

## Main brush

1. Turn over the main unit, lift the fastener and remove the main brush cover.
2. Take out the main brush upward.
3. Cut the hair wound on the main brush with a knife on the cleaning brush and clean the main brush.
4. Install the main brush back and press the fixing fastener of the main brush cover.

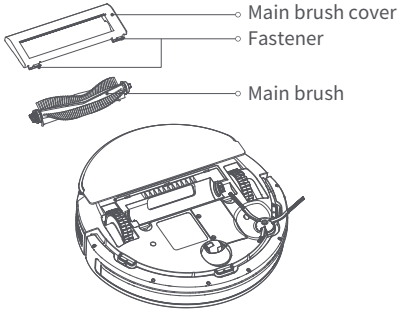


Cleaning method of main brush

Cut hair　　Clean up dirt

Tips: It is recommended to replace the main brush every 6-12 months to ensure the cleaning effect.

# Product Maintenance

Cleaning method of rubber brush

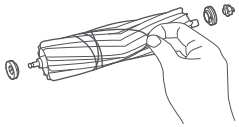

## Side brush

1. Turn over the main unit and remove the side brush fixing screw.
2. Remove and clean the side brush.
3. Replace the side brush and lock the screws.

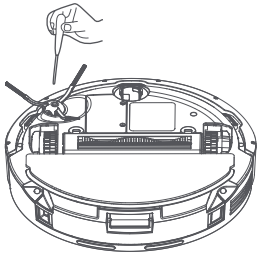

Tips: It is recommended to replace the side brush every 3-6 months to ensure the cleaning effect.

## Sensor cleaning

Please use a soft dry cloth to clean the cliff sensor regularly.

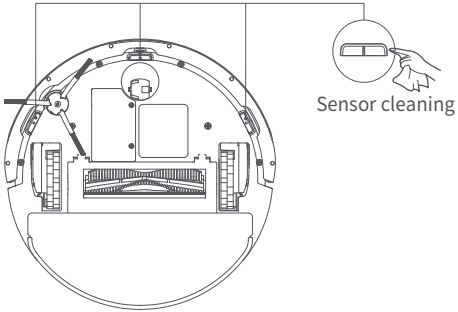


Tips: Do not use chemicals such as detergent or spray to clean the sensor.

# Common Problems

| Problem | Solution |
|---|---|
| Unable to power on | The battery is low and please charge it before using it. |
| Unable to charge | The charging dock is not powered on and please make sure the power connection is successful. The contact of the charging electrode is poor and please clean the charging shrapnel of the charging dock and the charging pole piece of the main unit.<br>The ambient temperature is too low(below 0°C) or too high(above 35°C). |
| The main unit cannot return to charge | Please make sure there is enough space around the charging dock. Please ensure that the identification area on the surface of the charging dock is free from dust and dirt.<br>The charging dock is not powered on. Please power on the charging dock before using it. |
| The main unit behavior is abnormal | Please turn it off and turn it on again. |
| The main unit is offline | Please make sure that the main unit is successfully connected to the network, and that the main unit is always in the range of Wi-Fi signal. |
| The main unit cannot connect to Wi-Fi | Please make sure that the main unit and the charging dock are within the range of Wi-Fi signal, and the signal is good. Please try resetting Wi-Fi before pairing. |
| Abnormal sound during cleaning | The main brush, the side brush, the left/right wheel or the universal wheel may be entangled with foreign matters. Please power it off and clean it up. |
| Cleaning capacity is declined | The dust box is full, please clean it. The filter screen is blocked, please clean it. The main brush is entangled by foreign matter, please clean the main brush. |
| Fail to do scheduled cleaning | Scheduled cleaning cannot be triggered when the battery is low. Please confirm that the main unit is connected to the network. If the main unit is not connected to the network, the time cannot be synchronized, and the scheduled cleaning will not start. |
| Whether it is need to charge for 24 hours for the first use | The main unit has built-in high-performance lithium-ion battery, which has no memory effect and can be used when fully charged, without charging for 24 hours. |
| Whether it is needed to cut off the power supply of the charging dock and turn it off when charging is completed | During daily use, the standby power consumption is extremely low, and there is no need to turn off the power. Keeping the charging state is conducive to the best performance of the battery.<br>If it is not used for a long time, please cut off the power supply of the charging dock and power it off for storage. It is recommended to charge the battery once every 3 months to prevent the battery from being damaged due to over-discharge. |
| The main unit skids when mopping the floor | Please turn down the water output of the water tank, wipe the driving wheel with a rag, replace the wet rag wrung out on it and try. |

# Troubleshooting

| Fault Message | Solution |
|---|---|
| Clean cliff sensor and relocate robot. | Robot is off ground. Relocate and restart robot. Cliff sensor is dirty. Clean the sensor. |
| Check collision sensor and remove any foreign object on it. | Collision sensor is jammed. Remove foreign object by tapping the sensor. If there is no foreign object, relocate and restart robot. |
| Place robot on a horizontal ground and start it. | When starting, the tilt of the main unit is detected. Please put the main unit on the level ground and restart. The wheel is suspended, please move to a new position to start. |
| Remove any obstacle around robot and try again. | Robot may be jammed or trapped. Remove any barrier around it. |
| Place confirm that the 2-in-1 water tank has been installed in place | Please install the 2-in-1 water tank back and confirm that the 2-in-1 water tank has been installed in place. |
| In case recharging is failed, please put the main unit back into the charging dock | The main unit can’ t sense the position of the charging dock. Please put the main unit back to the charging dock |
| Low battery level. Please charge robot. | The power is too low, so the main unit can’ t start normally. Please put the main unit back in charging dock for charging. |

# Basic parameters

## Main unit

| | |
|---|---|
| Product Name | Robot Vacuum |
| Model | TL-G30 |
| Size | 325x325x80mm |
| Rated Power | 40W |
| Rated Voltage | 14.4V ⎓ |
| Voltage | 20V ⎓ |
| Battery capacity | 2600mAh (nominal capacity)<br>2500mAh (rated capacity) |
| Net weight | 3.1kg |
| Wireless Connection | Wi-Fi IEEE 802.11b/g/n 2.4GHz |

## Charging Dock

| | |
|---|---|
| Model | CDZ330G |
| Dimensions | 150×128×84mm |
| Rated input | 20V ⎓ 0.6A |
| Rated outpu | 20V ⎓ 0.6A |

# FCC WARNING

This device complies with part 15 of the FCC Rules. Operation is subject to the following two conditions: (1) this device may not cause harmful interference, and (2) this device must accept any interference received, including interference that may cause undesired operation.
Any changes or modifications not expressly approved by the party responsible for compliance could void the user's authority to operate the equipment.
NOTE: This equipment has been tested and found to comply with the limits for a Class B digital device, pursuant to Part 15 of the FCC Rules. These limits are designed to provide reasonable protection against harmful interference in a residential installation. This equipment generates, uses and can radiate radio frequency energy and, if not installed and used in accordance with the instructions, may cause harmful interference to radio communications.
However, there is no guarantee that interference will not occur in a particular installation. If this equipment does cause harmful interference to radio or television reception,
which can be determined by turning the equipment off and on, the user is encouraged to try to correct the interference by one or more of the following measures:
-- Reorient or relocate the receiving antenna.
-- Increase the separation between the equipment and receiver.
-- Connect the equipment into an outlet on a circuit different from that to which the receiver is connected.
-- Consult the dealer or an experienced radio/TV technician for help.
To maintain compliance with FCC’s RF Exposure guidelines, This equipment should be installed and operated with minimum 20cm distance between the radiator and your body: Use only the supplied antenna.