AI Collision Avoidance Device

Welcome to AI Collision Avoidance Dash Camer

1.Please use the mobile APP "UTOUR International" to complete product operation and configuration.

2.For Android/iOS phones, you can scan the QR code on the right or search for "UTOUR International" in the Google Play Store or Apple App Store. Download the App and install it on your phone.

3.Follow the directions of the APP, you can connect to the AI Collision Avoidance Device for setting.

Safety Notice

Before using AI Collision Avoidance Dash Camera,please read the following safety notice carefully and take appropriate safety precautions.

When you install the AI Collision Avoidance Dash Camera on the car, it means that you are aware of the following conditions and agree to use this product in accordance with the instructions.

1.AI Collision Avoidance Dash Camera is an advanced driving assistance system (ADAS) that can provide warnings to drivers in some potentially dangerous situations, but it is not an automatic driving system and cannot replace drivers to control cars under any circumstances. Drivers must always be awake and cautious, strictly abide by traffic rules and regulations, and ensure driving safety by themselves. Even when watching the monitor display or pressing the monitor button, all attention should be paid to driving.

2.AI Collision Avoidance Dash Camera uses the world's leading computer vision and deep-learning technology, but we can not guarantee the complete and accurate identification of all vehicles, pedestrians, lane lines or other traffic elements, nor can we guarantee to provide complete and accurate visual or sound warning.

3.External matters (e. g. stains, oil stains, water stains, dust, fingerprints, etc.) on the surfaces of car windshield and camera may cause some anti-collision functions failure. Please keep both the windshield and camera surface clean and dry to ensure clear vision of the camera. Do not touch or play with the camera at will.

4.Self-luminous/strongly-reflective/high-brightness objects (e. g. white paper, plastic bags, metal/ceramic/glass products, etc.) placed on the top of the dashboard may reflect images on the windshield, interfere with camera vision and cause some anti-collision functions failure.

5.Some bad weather may cause some anti-collision functions failure, including but not limited to: rain, snow, fog, haze, dust, typhoon, tornado, extreme cold and hot.

6.Some bad lighting conditions may cause some anti-collision functions failure, including but not limited to: backlighting, tunnels, culverts, forests and other scenes with insufficient lighting, and scenes with strong light such as high beam, spotlight, laser, flame, explosion, etc.

7.Some poor road conditions may affect the intelligent adjustment and lane departure warning device of the MINIEYE intelligent multi-function warning device, including but not limited to: lane markings that do not meet the standards, severely worn lane markings, and soil/snow/ lane signs covered by foreign objects such as stagnant water.

8.Some special types of vehicles may not be accurately identified by MINIEYE Intelligent Multi-Function Warning Device, including but not limited to: military vehicles, ancient vehicles, exotic vehicles, exotic painting vehicles, special engineering vehicles, trailers loaded with special shaped items, and passing vehicles.

9.Some people with special postures or special shaped clothes may not be accurately identified by MINIEYE Intelligent Multi-Function Warning Device, including but not limited to: people wearing low-visibility clothing such as camouflage uniform, people in special postures such as squatting/kneeling/lying down, people performing sports movements such as dance/martial arts/gymnastics/yoga, and people riding horse or taking special transportation such as carriage.

10.The sudden appearance of unknown objects in the field of vision may cause some anti-collision functions failure for a short time, including but not limited to balloons, drones, flying toys, balls and sporting goods, high-altitude parabolic and floating garbage.

11.By upgrading the version of AI anti-collision algorithm, the functional failure rate of the above special scenes will continue to decrease. Please refer to the actual experience.

12.This device complies with Part 15 of the FCC Rules. Operation is subject to the following two conditions:

(1)This device may not cause harmful interference;

(2)This device must accept any interference received, including interference that may cause undesired operation.

Warning: Changes or modifications to this unit not expressly approved by the party responsible for compliance could void the user's authority to operate the equipment.

Note: This equipment has been tested and found to comply with the limits for a Class B digital device,pursuant to Part 15 of the FCC Rules.These limits are designed to provide reasonable protection against harmful interference in a residential installation. This equipment generates, uses and can radiate radio frequency energy and, if not installed and used in accordance with the instructions, may cause harmful interference to radio communications. However, there is no guarantee that interference will not occur in a particular installation. If this equipment does cause harmful interference to radio or television reception,which can be determined by turning the equipment off and on, the user is encouraged to try to correct the interference by one or more of the following measures:

-Reorient or relocate the receiving antenna.
-Increase the separation between the equipment and receiver.
-Connect the equipment into an outlet on a circuit different from that to which the receiver is connected.
-Consult the dealer or an experienced radio/TV technician for help.

"This equipment complies with FCC RF radiation exposure limits set forth for an uncontrolled environment.
This equipment should be installed and operated with a minimum distance of 20 centimeters between the radiator and your body."

Cautions

1.UTOUR does not bear any responsibilities to any loss caused by malfunction, information loss and improper operation of products.

2.Some functions may not work normally due to differences in vehicle conditions, driving behavior, driving environment, etc., and product functions may fail due to power off, abnormal temperature, collision, storage damage, etc.

3.Please pay attention to driving safety. The installation position of the device should not block the driving sight or affect vehicle settings such as airbags. Please do not debug the device or carry out APP operation during driving.

4.This product supports class10 high-speed memory cards with a maximum capacity of 128G. Please cut off the power supply before inserting or removing the memory card. Please use the high-quality memory cards purchased through regular suppliers. UTOUR does not bear any responsibilities to any loss caused by the quality of the memory cards.

5.The normal working temperature range of this product is -30℃~75℃. It is forbidden to use it out of the indicated temperature environment. Please do not touch the device main unit in high temperature environment to prevent scalding.

6.Please do not modify this product by yourself. Please use the standard components such as car charger and power cables to ensure normal working and avoid device damage, explosion or fire.

Product Appearance and Components

◆ Main unit

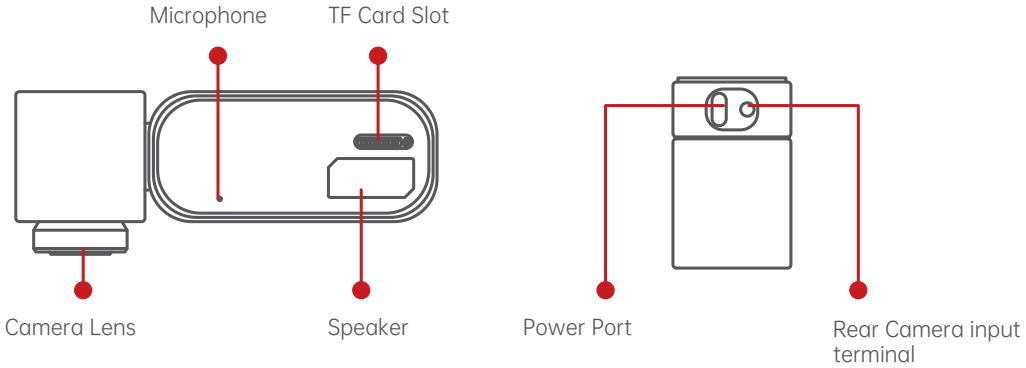

◆ Components

Monitor x1
(Only for C2MPro)

Monitor Power Cable x1
(Only for C2MPro)

Rear Camera x1
(optional)

Rear Camera Cable x1
(optional)

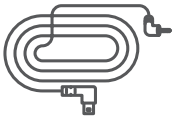

Power Cable x1

Electrostatic Sticker x2

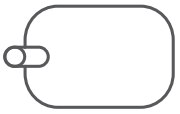

Crowbar x1

Instruction Manual x1

Installation Guide

The normal operation of the AI Collision Avoidance Dash Camera depends on accurate and rigorous installation. Before installing this product, please check the installation guide or video carefully to avoid trouble caused by installation errors.

Search UTOUR on Google Play Store/Apple Store or scan the QR code to download APP to see the installation video.It is easier to get started.

For optimal product functionality, please ensure the following installation conditions:

1.There is no visual obstruction in front of and around the camera (such as rear view mirror box cover or plating), and windshield wiper can cover the area for cleaning.

2.Try to install as close to the center above the windshield as possible. Pay attention to the host base to reserve enough space for the cable outlet.

3.The installation area of the windshield must be kept clean and dry.

◆ Installing a Memory Card

Take out the device main unit and insert a TF card into the card slot.

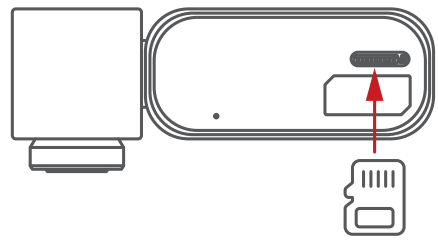

◆ Paste the electrostatic sticker

Take out the electrostatic sticker in the packing box and peel off the release film, and paste it on the front glass in the recommended host installation area. Please pay attention to the gap between the electrostatic sticker and the glass when pasting, and make sure the air bubbles are squeezed clean.

Warm Tip: There may be a microwave window (i. e. black grid area) in the device installation area. Please avoid that area because electrostatic sticker cannot be effectively pasted on non-smooth flat.

◆ How to install the main unit

1.Tear off the camera lens protection film.

2.Adjust the device to ensure the lens is facing forward.

3.After confirming the position and direction, peel off the protective film of 3M glue on the device, paste the device on the electrostatic sticker and press hard to make it stable on the windshield.

4.Use the power supply cable with car charger to connect the power port of the device to car's cigarette lighter socket.

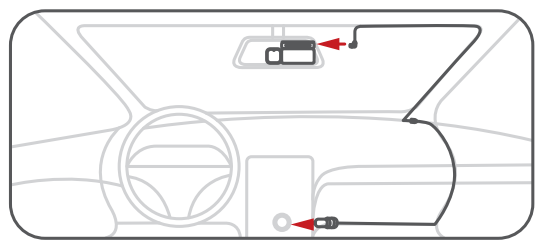

Important Note: Depending on the vehicle, the cigarette lighter socket may be located in a different position. The figure provided is for reference only.

◆ How to install the monitor

1.Tear off the monitor protection film.

2.For good viewing, adjust the monitor to suitable position.

3.After confirming the position and direction, tear off the protective film of 3M glue on the monitor, paste the monitor on the central control panel (If the monitor is too close to the windshield, it may cause reflection on the windshield, which may affect the product functionality under some specific driving scenes and affect your experience. Please choose to place it away from the front windshield as far as possible.) and press hard to make it stable.

4.Use the monitor cable to connect the power cable and power port of the monitor.

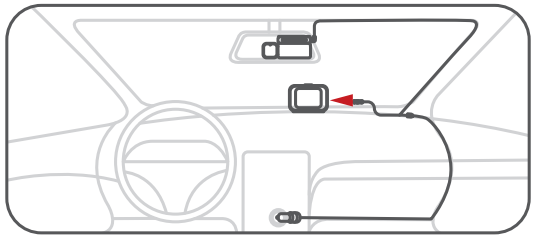

◆ How to install the rear camera

1.Tear off the rear camera lens protection film.

2.Find a best location, tear off the 3M adhesive on the rear camera, fix the rear camera on car rear windshield.

3.Adjust the rear camera angle.

4.Use the rear camera cable to connect the rear camera input terminal of the main unit.

5.Use the crowbar to route your rear camera's power cable to the front of the car, and connect rear camera power cable to front camera earphone port for charging.

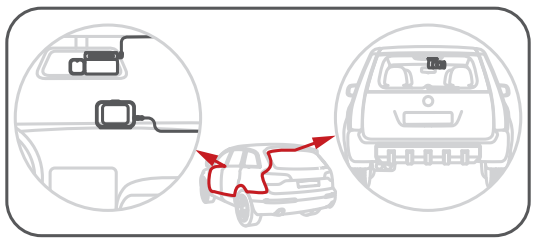

◆ Installation complete

Start the car, the product will automatically turn on, and a power-on prompt sound will be issued, and the continuous video storage will begin. Please use the mobile APP to complete the screen adjustment and personalized configuration.

☆ **Important Note: If you purchase a parking monitoring cable separately, please refer to the installation guide in the parking monitoring cable package to install.**

APP Settings

In order to connect to device Wi-Fi, please list the App in your trust application list and make sure the device's Wi-Fi is on.

◆ Pair smart phone to UTOUR ADAS Dash Cam

1.After turning on the device. Launch UTOUR App, tap on the "device" page, then tap on "+" in the upper right corner

2.Choose your UTOUR Dash Cam from the network list(For Android system, App will start to search Dash Cam network automatically. For iOS phone: turn on WLAN from "Settings->WLAN"). The Dash Cam's default Wi-Fi name is "UTOUR-Device ID"(Device ID can be viewed at the bottom of the package). Enter the password, the default password is 12345678.

3.If your phone pops up a prompt box asking whether to continue using the wireless network, please select Continue.

4.When the connection is done, the device will ask for user authorization to ensure APP-to-Device communication security

5.In order to activate the collision avoidance functions successfully, please park your car on the horizontal ground (do not parking on ramps or sloping roads).

◆ APP Activation

1.The width of different car models will affect the AI anti-collision algorithm' s prediction of all collision risks. Please select your car type (for more accurate model selection, please optimize through the "anti-collision setting").

2.The horizontal distance between the camera and the central axis of the windshield determines the accuracy of AI anti-collision algorithm to construct ground models. Please use the scale line at the bottom of this manual for measurement.

3.The APP provides a real-time image for adjustment preview. You can confirm it according to the relevant operation guide lines, and the anti-collision functions will be activated upon completion.

4.After the anti-collision function is activated,it is required to complete more accurate adjustment calculation by collecting data on a specific road environment.You need to keep the vehicle speed of more than 30km/h on a horizontal road with clear lane lines on both sides, and drive for 3-5 minutes without changing lanes. Then wait for its accurate adjustment to be completed in the following normal driving.

Important Note:If objects with strong reflection and whiter light (such as paper towels and decorations) are placed on the dashboard, they may cause interference to the algorithm in some driving scenes and affect your experience. Please be sure to avoid them.

◆ Anti-Collision Functions Setting

Through "Device" Page - "Anti-Collision Settings", you can enter to set various parameters of the anti-collision functions.

1.Forward Collision Warning

Ensure that the car is at a safe distance from the front car in all scenes.

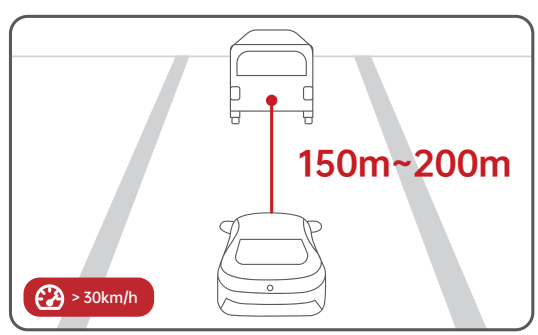

2.Headway Monitoring Warning

Ensure that the car is at a safe distance from the front car in all scenes.

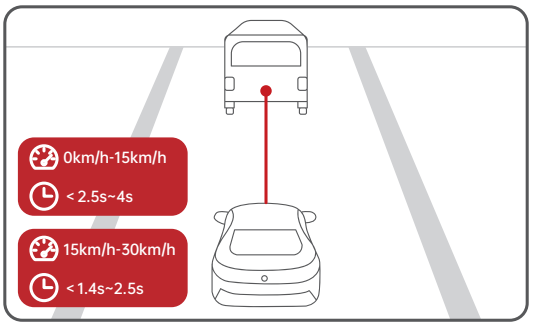

3.Pedestrian Collision Warning

Monitor the collision risk of urban targets such as pedestrians, bicycles and motorcycles.

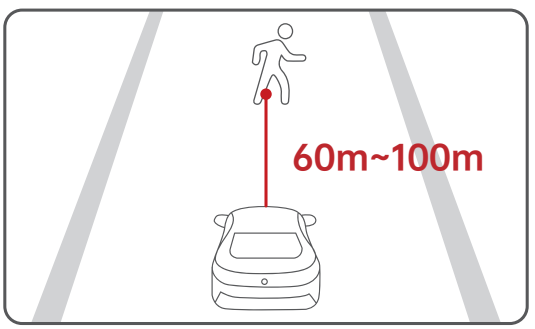

4.Lane Departure Warning

Warning of dangerous lane changing behavior at high speed.

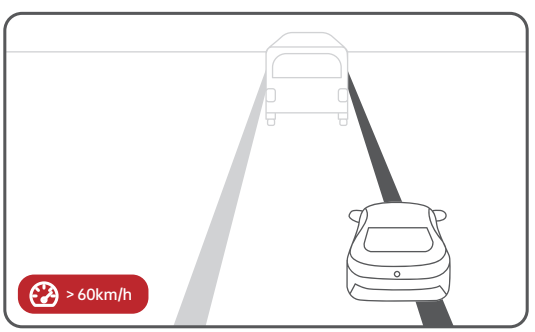

5.Stop & Go

Remind you to start when the front car leaves on a congested road.

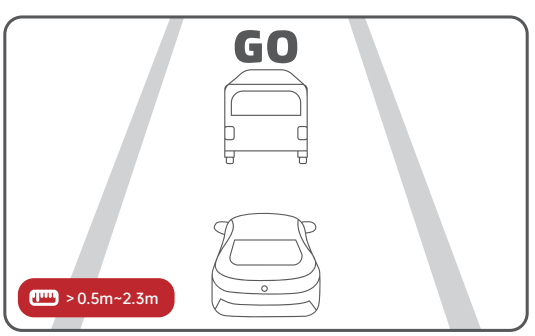

6.Harsh Acceleration/Cornering/Deceleration

Warning of dangerous driving habits.

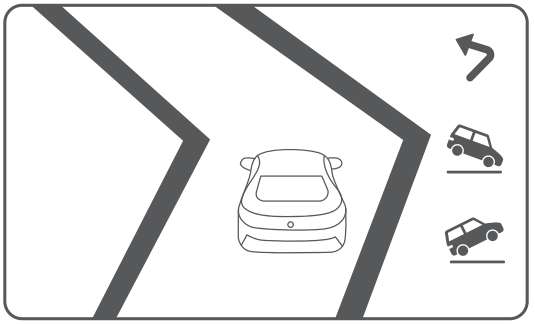

7.Emergent Collision Warning

Start recording when a collision is detected.

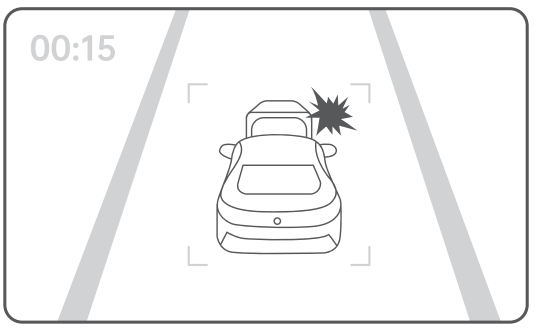

8.Urban Forward Collision Warning

Ensure that the car is at a safe distance from the front car in all scenes.

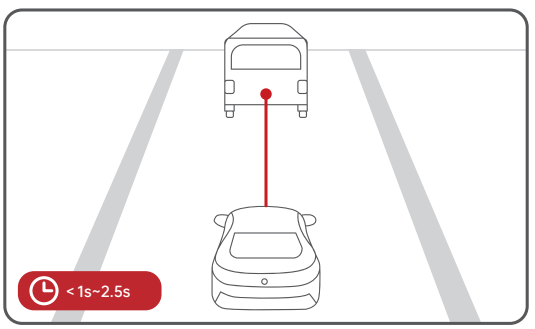

Warm Tip: In order to obtain a more accurate and safe driving experience, you can further improve the vehicle model data, reset the installation distance parameters, or re-adjust the image when the camera offset is too large.

◆ Voice Command

Control the device through quick voice commands, such as: Take a picture, Turn off the recording, etc.

◆ Preview / Playback

Connect to Dash Cam via direct Wi-Fi. Open the MINIEYE APP, tap on the "Device" page, to preview the current real-time display, and playback video in the previous 2 hours, or enter the photo album to view all driving record videos.

- **Warm Tip: The files saved in the device can be viewed, downloaded and shared through home page "Device "- "Device Album".**
- **Note: If the relevant functions of the product do not match the instructions, it is the reason for the version upgrade, and the actual version shall prevail.**

◆ 3D road viewing

After the anti-collision functions work effectively, the monitor will display the road perception results analyzed by MINIEYE professional AI algorithm and display dangerous collision warnings.

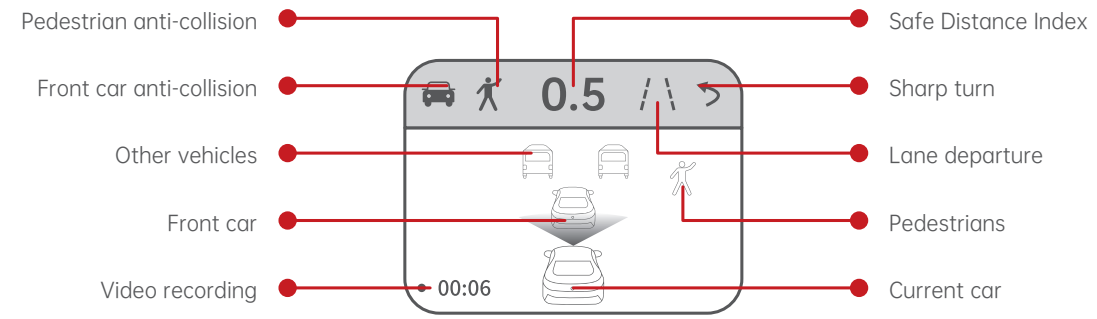

- **Safe distance index :This number is a time factor (seconds) obtained by calculating the absolute distance between the front car and the current speed of this car, the lower the number, the higher the risk of collision.**
- **Monitor display : With the upgrade of AI algorithm functions, the display contents will be upgraded from time to time. Please refer to the actual product.**

◆ Real-time road viewing

While the device is on, you can double-click the button on the top of the monitor to switch the 3D road viewing to a real-time viewing. At the same time, you can check the status of sound recording, mobile phone connection, memory card and GPS signal on the top bar.

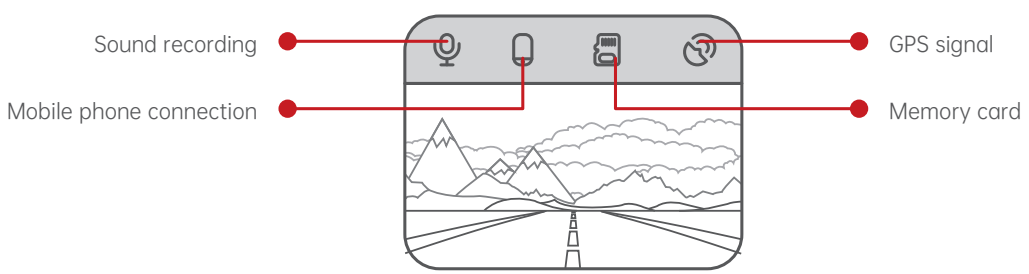

Product Parameters

Product	Project	Specifications
AI Collision Avoidance Dash Camera	Size	110mm × 35mm × 50mm
	Material	PC plastic、PC + ABS plastic、Aluminum alloy
	Operating Temp	-20℃ ~ 65℃
	Storage Temp	-20℃ ~ 65℃
	Working Input	12V / 1A
Rear Camera (optional)	Size	80mm × 41mm × 34mm
	Working Input	12V / 1A
Monitor (optional)	Size	70mm × 34mm × 50mm
	Working Input	12V / 1A

FCC Statement:
This device complies with part 15 of the FCC Rules. Operation is subject to the following two conditions: (1) This device may not cause harmful interference, and (2) this device must accept any interference received, including interference that may cause undesired operation.
This equipment has been tested and found to comply with the limits for aClass B digital device, pursuant to part 15 ofthe FCCRules. Theselimits aredesigned to provide reasonable protection against harmful interference in a residential installation. This equipmentgenerates,usesandcanradiateradiofrequencyenergyand,ifnotinstalled andused inaccordance withthe instructions,may causeharmfulinterferencetoradio communications.However,there isno guaranteethatinterferencewill notoccur ina particularinstallation.Ifthisequipmentdoescauseharmfulinterferencetoradioor television reception, which can be determined by turning the equipment off and on, the user is encouraged to try to correct the interference by one or more of the following measures:
—Reorient or relocate the receiving antenna.
—Increase the separation between the equipment and receiver.
—Connect the equipment into an outlet on a circuit different from that to which the receiver is connected.
—Consult the dealer or an experienced radio/TV technician for help.
Caution: Any changes or modifications not expressly approved by the party responsible for compliance could void the user's authority to operate the equipment.
Thisequipment complies withFCC radiation exposure limits setforth for an uncontrolled environment. This transmitter must not be co-located or operating in conjunction with any other antenna or transmitter.
This equipment should be installed and operated with minimum distance 20cm between the radiator&your body.

This manual is for reference only. Specific functions and product pictures may slightly differ from the actual ones. Please refer to the actual product.

UTOUR Official Website : www.utourtech.com

For any questions please contact : support@spedaltech.com