Model# T02822

HAMPTON BAY®

USE AND CARE GUIDE

LED Desk Lamp

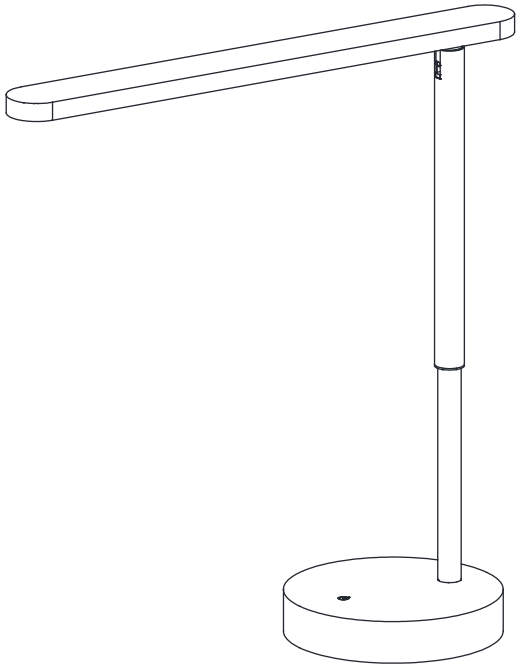

Questions, problems, missing parts? Before returning to the store,
call Hampton Bay Customer Service
8 a.m. - 7 p.m., EST, Monday-Friday, 9 a.m. - 6 p.m., EST, Saturday

1-855-HD-HAMPTON

HAMPTONBAY.COM

THANK YOU

We appreciate the trust and confidence you have placed in Hampton Bay through the purchase of this light fixture. We strive to continually create quality products designed to enhance your home. Visit us online to see our full line of products available for your home improvement needs. Thank you for choosing Hampton Bay!

Table of Contents

Table of Contents 2
Safety Information 2
Warranty 2
Pre-Installation 3
Planning Installation 3
Package Contents 3
Operation 4
Care and Cleaning 5
Troubleshooting 5

Safety Information

- ☐ Consult a qualified electrician if you have any electrical questions.
- ☐ Warning: Changes or modifications to this unit not expressly approved by the party responsible for compliance could void the user's authority to operate the equipment.
- ☐ NOTE: This equipment has been tested and found to comply with the limits for a Class B digital device, pursuant to part 15 of the FCC Rules. These limits are designed to provide reasonable protection against harmful interference in a residential installation. This equipment generates, uses and can radiate radio frequency energy and, if not installed and used in accordance with the instructions, may cause harmful interference to radio communications. However, there is no guarantee that interference will not occur in a particular installation. If this equipment does cause harmful interference to radio or television reception, which can be determined by turning the equipment off and on, the user is encouraged to try to correct the interference by one or more of the following measures:
  - Reorient or relocate the receiving antenna.
  - Increase the separation between the equipment and receiver.
  - Connect the equipment into an outlet on a circuit different from that to which the receiver is connected.
  - Consult the dealer or an experienced radio/TV technician for help.

CAUTION: Inspect the wire insulation for any cuts, abrasions, or exposed copper that may have resulted during shipping. If there is a defect in the wire, do not attempt installation. Please call our Customer Service Team at 1-855-HD-HAMPTON.

WARNING: Before starting installation of this fixture or removal of a previous fixture, disconnect the power by turning off the circuit breaker or by removing the fuse at the fuse box.

Radiation Exposure Statement
This device complies with FCC RF radiation exposure limits set forth for an uncontrolled environment. This transmitter must not be coÿlocated or operating in conjunction with any other antenna or transmitter. During the operation of device a distance of 15 cm surrounding the device and 20 cm above the top surface of the device must be respected.

Warranty

The manufacturer warrants this lighting fixture to be free from defects in materials and workmanship for a period of three (3) years from date of purchase. This warranty applies only to the original consumer purchaser and only to products used in normal use and service. If this product is found to be defective, the manufacturer's only obligation, and your exclusive remedy, is the repair or replacement of the product at the manufacturer's discretion, provided that the product has not been damaged through misuse, abuse, accident, modifications, alterations, neglect, or mishandling. This warranty shall not apply to any product that is found to have been improperly installed, set-up, or used in any way not in accordance with the instructions supplied with the product. This warranty shall not apply to a failure of the product as a result of an accident, misuse, abuse, negligence, alteration, faulty installation, or any other failure not relating to faulty material or workmanship. This warranty shall not apply to the finish on any portion of the product, such as surface and/or weathering, as this is considered normal wear and tear. The manufacturer does not warrant and specially disclaims any warranty, whether express or implied, of fitness for a particular purpose, other than the warranty contained herein. The manufacturer specifically disclaims any liability and shall not be liable for any consequential or incidental loss or damage, including but not limited to any labor / expense costs involved in the replacement or repair of said product.

Contact the Customer Service Team at 1-855-HD-HAMPTON or visit www.HAMPTONBAY.com.

Pre-Installation

PLANNING INSTALLATION

- ☐ Read all instructions before installation.
- ☐ To avoid damaging this product, assemble it on a soft, non-abrasive surface, such as carpet or cardboard.
- ☐ Keep your receipt and these instructions for proof of purchase.

PACKAGE CONTENTS

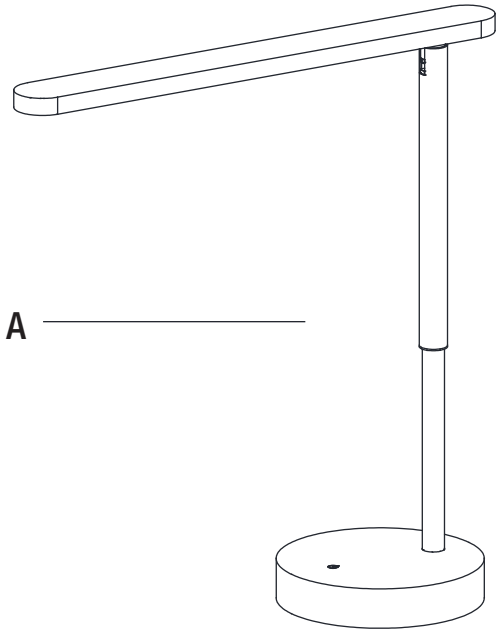

Part	Description	Quantity
A	Light fixture	1

Operation

1 Operating the lamp

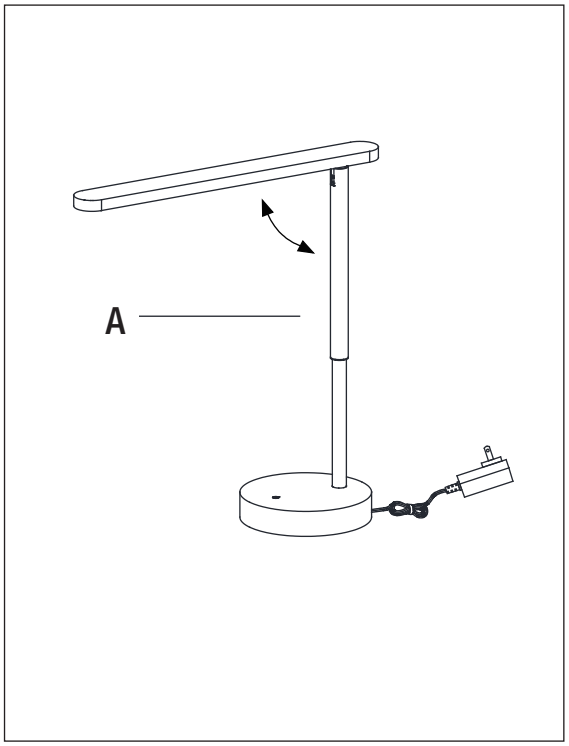

- ☐ Insert the plug into an electrical outlet.
- ☐ Use the touch switch on the lamp base of light fixture (A) to get the nightlight on, main light on, both on and both off. Also use it to adjust the brightness to meet your needs.
- ☐ Adjust the head with integrated LED to position the light up and down.

> **WARNING:** The adjustable angle is not too big. Do not over rotate. An improperly rotation may cause damage.

- ☐ USB Charger
  Lamp comes with USB output for mobile devices.
  Maximum output 10W 5VDC 2A.
- ☐ Wireless Charger
  Lamp comes with wireless charger for charging compatible devices.
  Maximum output 10W 5VDC 2A.
  To charge device place it on top of the wireless charging pad embedded on the lamp base of the light fixture (A).

Operation

1 TURNING THE LIGHT ON

- ☐ Turn the light switch on to activate the fixture.

Care and Cleaning

- ☐ Clean the lamp with a soft, dry cloth.
- ☐ Do not use any cleaners with chemicals, solvents, or harsh abrasives.

Troubleshooting

Problem	Possible Cause	Solution
The lamp will not light.	The power is off.	Ensure the power supply is On.
	There is a faulty wire connection.	Check the wiring.
	The circuit breaker is off.	Ensure the circuit breaker is in the ON position.
The fuse blows or circuit breaker trips when the light is turned on.	There are crossed wires or the power wire is grounding out.	Check the wire connections. Contact a qualifed electrician or call the Customer Service Team at 1-855-HD-HAMPTON.

HAMPTON BAY®

Questions, problems, missing parts? Before returning to the store,
call Hampton Bay Customer Service
8 a.m. - 7 p.m., EST, Monday-Friday, 9 a.m. - 6 p.m., EST, Saturday

1-855-HD-HAMPTON

HAMPTONBAY.COM

Retain this manual for future use.

FCC SUPPLIER'S DECLARATION OF CONFORMITY

Product information

Product Name: LED table lamp

Model No.: T02822

Trade Mark: Hampton Bay

Applicable standards: FCC CFR Title 47 Part 15 Subpart B

This device complies with related rules, operation is subject to the following two conditions.

(1). This device may not cause harmful interference and,

(2). This device must accept any interference received, including interference that may cause undesired operation.

The test result has been evaluated by DongGuan New Testing Centre Co., Ltd laboratory and showed in the test report

The test report number:

It is understood that each unit marketed is identical to the device as tested, and any changes to the device that could adversely affect the emission characteristics will require retest.

The following responsible party designated in FCC §2.909 is responsible for this declaration:

Company Name: Rising Stars Lighting Co.,Ltd

Company Address: 14 Robins Tree Ln, Irvine, CA 92602 USA

Signature

(Full Name): Mia Zhang

Title:

Telephone Number: +1-213-840-1232

Fax: +1-213-840-1232

Date: 03/13/2023

Email: mia@risingstarlights.com