UNILUX
HVAC Industries Inc.

Unilux HVAC Thermostat

This manual covers the installation and operation of the Unilux HVAC Thermostat

User Manual Statement

This device contains licence-exempt transmitter(s)/receiver(s) that comply with Innovation, Science and Economic Development Canada's licence-exempt RSS(s). Operation is subject to the following two conditions:

1. This device may not cause interference.
2. This device must accept any interference, including interference that may cause undesired operation of the device.

This Class B digital apparatus complies with Canadian ICES-003.

This equipment complies with Canada radiation exposure limits set forth for uncontrolled environments. This equipment should be installed and operated with a minimum distance of 20cm (may be adjusted according to actual calculation result) between the radiator and your body.

This transmitter must not be co-located or operating in conjunction with any other antenna or transmitter.

L'émetteur/récepteur exempt de licence contenu dans le présent appareil est conforme aux CNR d'Innovation, Sciences et Développement économique Canada applicables aux appareils radio exempts de licence. L'exploitation est autorisée aux deux conditions suivantes :

1. L'appareil ne doit pas produire de brouillage ;
2. L'appareil doit accepter tout brouillage radioélectrique subi, même si le brouillage est susceptible d'en compromettre le fonctionnement.

Cet appareil numérique de la classe B est conforme à la norme NMB-003 du Canada.

Déclaration d'IC sur l'exposition aux radiations:

Cet équipement est conforme aux limites d'exposition aux radiations définies par le Canada pour des environnements non contrôlés. Cet équipement doit être installé et utilisé à une distance minimum de 20 cm entre l'antenne et votre corps.

Cet émetteur ne doit pas être installé au même endroit ni utilisé avec une autre antenne ou un autre émetteur.

Product Name: TA640FCW-ULX

Registration Number: 0033470600

FCC ID: 2BAPFGEN0UNITA

IC Certification Number: 30777-GEN0UNITA

User Manual Statement

Caution: The user is cautioned that changes or modifications not expressly approved by the party responsible for compliance could void the user's authority to operate the equipment.

Note: This equipment has been tested and found to comply with the limits for a Class B digital device, pursuant to part 15 of the FCC Rules. These limits are designed to provide reasonable protection against harmful interference in a residential installation. This equipment generates, uses and can radiate radio frequency energy and, if not installed and used in accordance with the instructions, may cause harmful interference to radio communications. However, there is no guarantee that interference will not occur in a particular installation. If this equipment does cause harmful interference to radio or television reception, which can be determined by turning

the equipment off and on, the user is encouraged to try to correct the interference by one or more of the following measures:

- Reorient or relocate the receiving antenna.
- Increase the separation between the equipment and receiver.
- Connect the equipment into an outlet on a circuit different from that to which the receiver is connected.
- Consult the dealer or an experienced radio/TV technician for help.

This equipment complies with FCC's RF radiation exposure limits set forth for an uncontrolled environment. The antenna(s) used for this transmitter must be installed and operated to provide a separation distance of at least 20 cm from all persons and must not be collocated or operating in conjunction with any other antenna or transmitter. Installers must ensure that 20cm separation distance will be maintained between the device and users.

This device complies with Part 15 of the FCC Rules. Operation is subject to the following two conditions:

1. This device may not cause harmful interference.

2. This device must accept any interference received, including interference that may cause undesired operation.

Table of Contents

For HVAC Experts:

General Information -
Compatibility & Safety Standards 5
What's in the Box 5
Temperature Measurement 6
Technical Data 6
Resolving Warning Symbols 6
Operating Mode Functionality 7

Installation Steps -
When Installing Direct to Wall 10
When Installing in North American Electrical Box 11
Wiring Instructions for Fan Coils 12
Initial Set Up Instructions 14
Pairing Your Mobile Device 15

For Thermostat Owners:

Thermostat Overview 16
Advanced Settings 17
P00 - Sleep Screen Layout 17
P01 - Sleep Countdown 17
P02 - System Mode 17
P03 - Temperature Display Unit 17
P04 - Time Display Format 17
P05 - Temperature Offset 18
P06 - Switching Differential - Heat Mode 18
P07 - Switching Differential - Cool Mode 18
P08 - Program Mode 18
P09 - Vacation Hold 20
P10 - Temperature/Humidity Reading 20
P15 - Operating Mode 20
P16 - Heating Changeover Temperature (Auto Mode) 20
P17 - Cooling Changeover Temperature (Auto Mode) 21
P19 / P20 - Wi-Fi & Mobile Reset 21

Warning Symbols 22

Compatibility & Safety Standards

The Unilux HVAC Thermostat is compatible with all Unilux fan coil products. Included in this manual are installation instructions for the following systems:

Fan Coils

(A) 2-Pipe Standard

(B) 4-Pipe Standard

(C) 2-Pipe w/Auxiliary Heating

(D) 2-Pipe w/Aquastat

(E) 2-Pipe w/Auxiliary Heating & Aquastat

This thermostat adheres to the following safety standards :

CE FC IC

What's in the Box

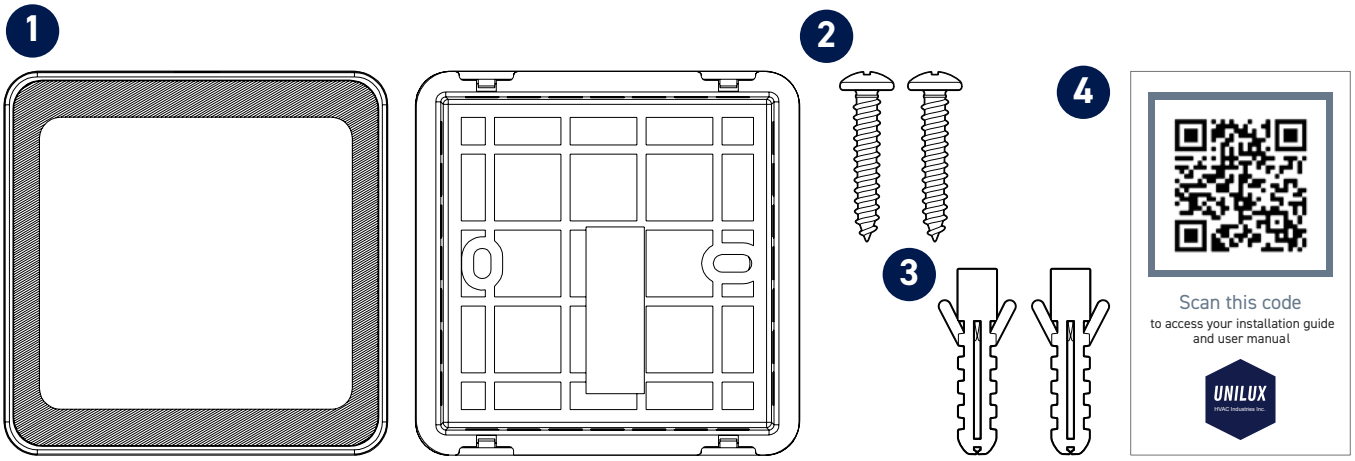

1. Thermostat (Top & Bottom Housing)
2. Screws x 2
3. Drywall Anchors x 2
4. QR Code to Unilux thermostat manual

You will also need:

- Screwdriver
- Bubble Level

Temperature Measurement

- Measurable range: 0 – 40 °C / 32 – 99 °F
- Controllable range: 5 – 35 °C / 40 – 95 °F
- Resolution: 0.5°C / 1°F

Embedded thermistor for measuring Room Temperature

- When temperature is below 0°C / 32°F , temperature keeps display LO
- When temperature is above 40°C / 99°F, temperature keeps display HI
- When sensor not connected or shorted thermostat will show "- -" and heat/cool output will turn OFF

Remote water temperature sensor (for 2-pipe systems only)

- When 2-pipe system is selected (2H or 2P mode), remote water temperature sensor must be present
- When sensor not connected or shorted thermostat will show "E1" and heat/cool outputs will turn OFF

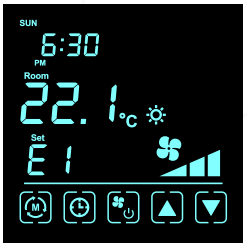

Technical Data

Technical data		
1.	Power supply	24VAC ± 20%
2.	Relay contact voltage	24VAC 50/60 Hz
3.	Relay contact current	2(1)A max
4.	Sensing Element	103AT
5.	Terminals:	2 mm2 cable
5.	Operating Temperature	32 ~ 122 °F / 0 ~ 50 °C
7.	Storage Temperature	23 ~ 122 °F / -5 ~ 50 °C
8.	Operating Humidity	5 ~ 95% R.H. non-condensing

Resolving Warning Symbols

Anti-Freeze Mode

Defrost indicator is shown on the screen when; the room temperature is below 5 °C / 41 °F OR remote water temperature sensor is below 1 °C / 34 °F OR 24VAC trigger signal is ON at FZ terminal. When triggered, fan-speed is set to Low and all water valves open (both W and Y outputs are turned on).

2-pipe system:
Valve output (W) should be On to keep water flowing.

4-pipe system:
Cool output should On and Heat output should On. (Both W and Y outputs should be ON)

Drain Pan Mode

Drain Pan indicator is shown when +24VAC signal is triggered at DP terminal. The fan is forced to OFF and all water valves close (both W and Y outputs are turned OFF).

Operating Mode Functionality

Refer to page 18 for instructions on reaching Operating Mode settings.

There are 4 operating modes:

1. Off mode

Heat/Cool/Fan outputs are always OFF.

2. Heat mode

Heat turns ON when room temperature is lower than setting temperature.

Heating protocol for all Unilux fan coil models WITHOUT auxiliary heat:

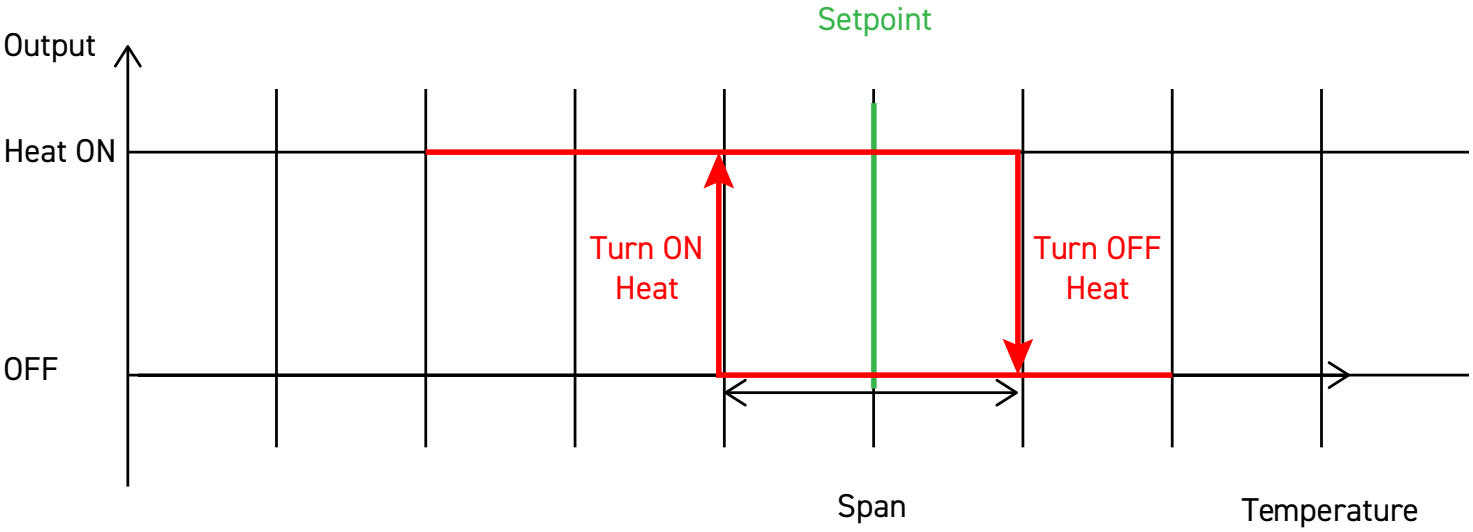

Heating protocol for Unilux fan coil units with auxiliary heat:

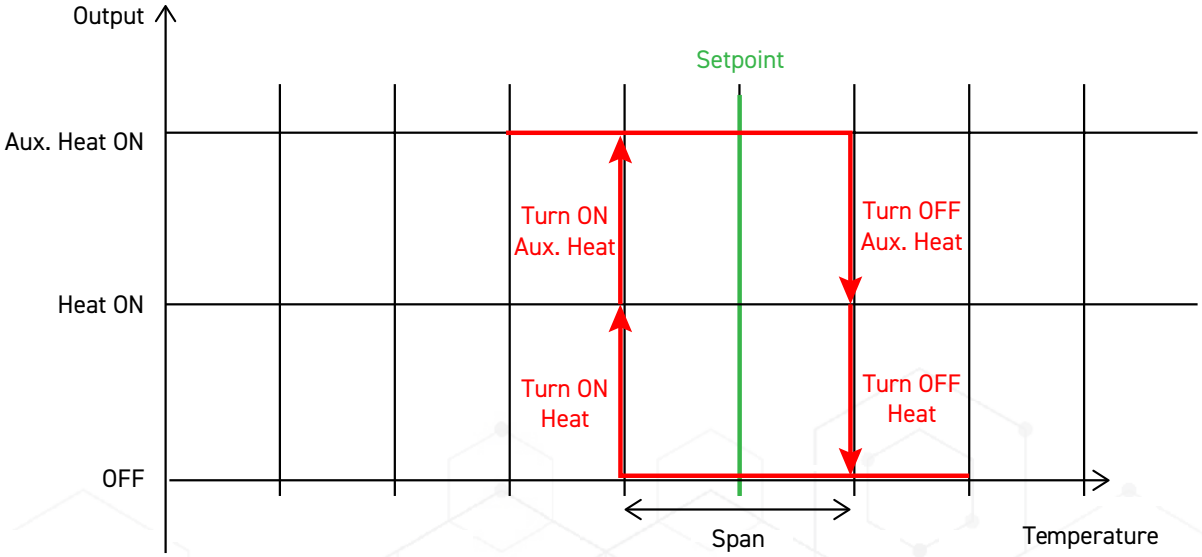

When call for heat (room temperature below setting temperature) and remote temperature is <29.5°C/85°F:

- Hot water valve does not open (W has no output)
- Auxiliary heat turns ON (Y/A has output)

When call for heat and remote temperature is higher than or equal to 29.5°C/85°F:

- Auxiliary heat does not turn on (Y/A has no output)
- Hot Water Valve opens (W has output)

3. Cool mode

Cool turns ON when room temperature is higher than setting temperature.

Cooling protocol for all Unilux fan coil units:

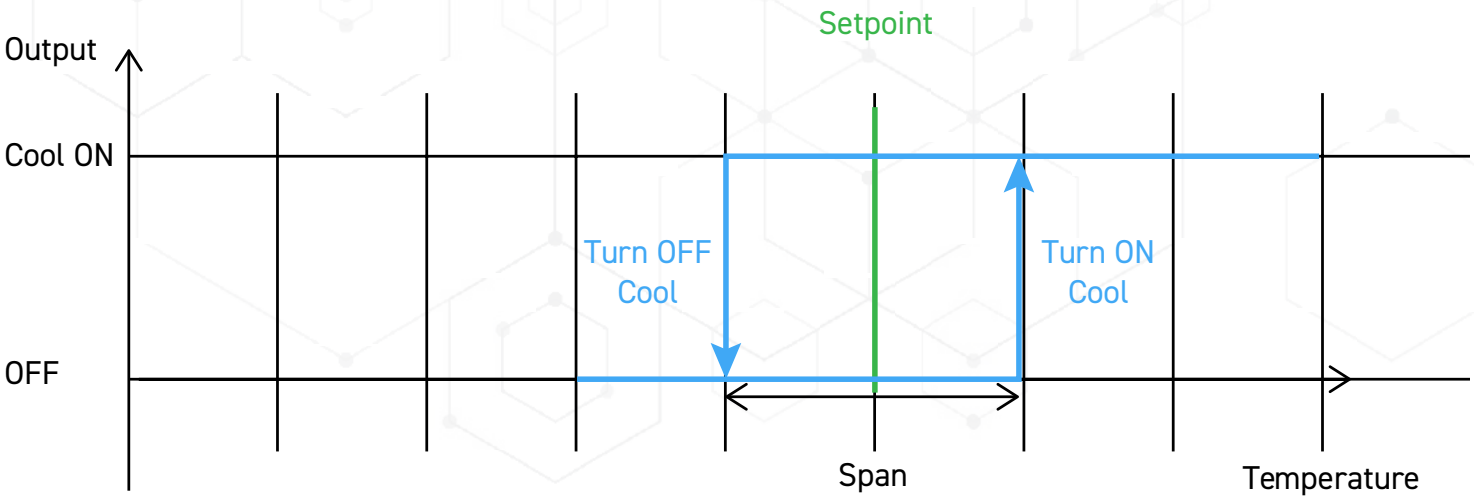

4. Auto mode

Output switches ON/OFF according to both heat setpoint and cool setpoint. The heat setpoint and cool setpoint must be separated by a dead band of 2°C / 4°F. While switching Heat/Cool, outputs do not turn ON during a 4 minute minimum switching OFF time. The heat icon will flash on the thermostat while in Heat Mode, and the cool icon flashes while in Cool Mode.

Heat/Cool control for Auto Mode

- 2-pipe fan coil system (with and without Auxiliary heat)
  - Remote water temperature sensor must present for 2-pipe systems
  - Heat control when remote temperature > 29.5°C / 85°F
  - Cool control when remote temperature < 18.5°C / 65°F
- 4-pipe fan coil system
  - Control switches to Heat control when room temperature is lower than Heat setpoint
  - Control switches to Cool control when room temperature is higher than Cool setpoint

Auto protocol for all Unilux fan coil models WITHOUT auxiliary heat:

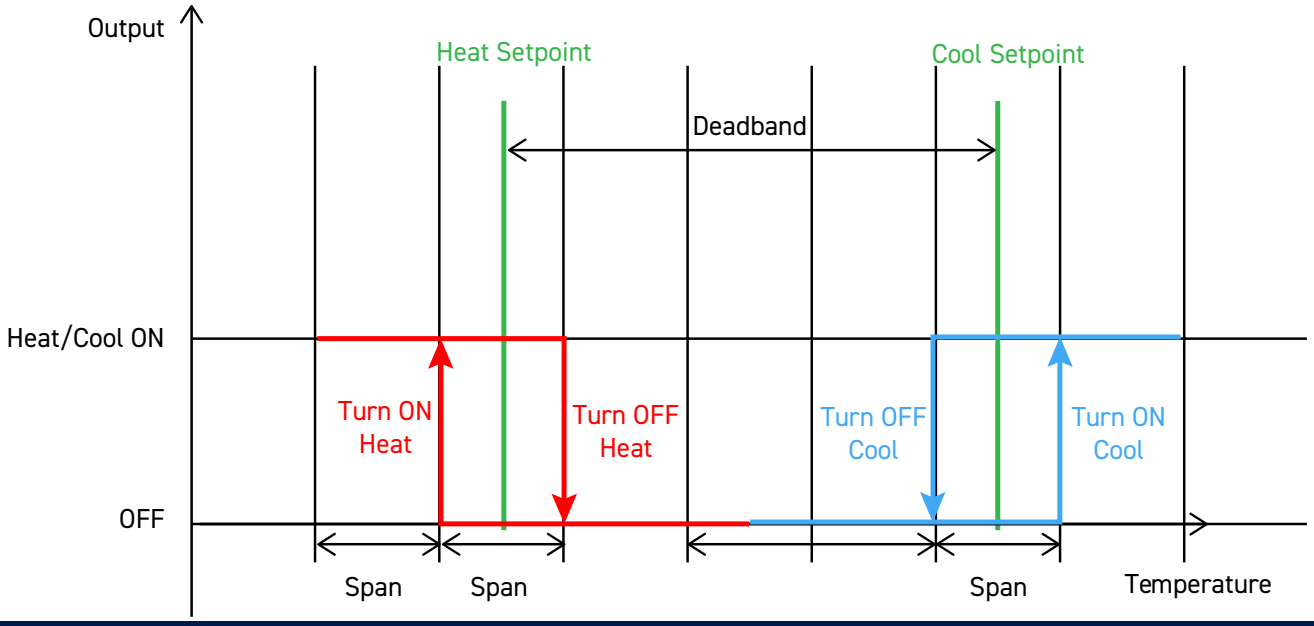

Auto protocol for Unilux fan coil units with auxiliary heat:

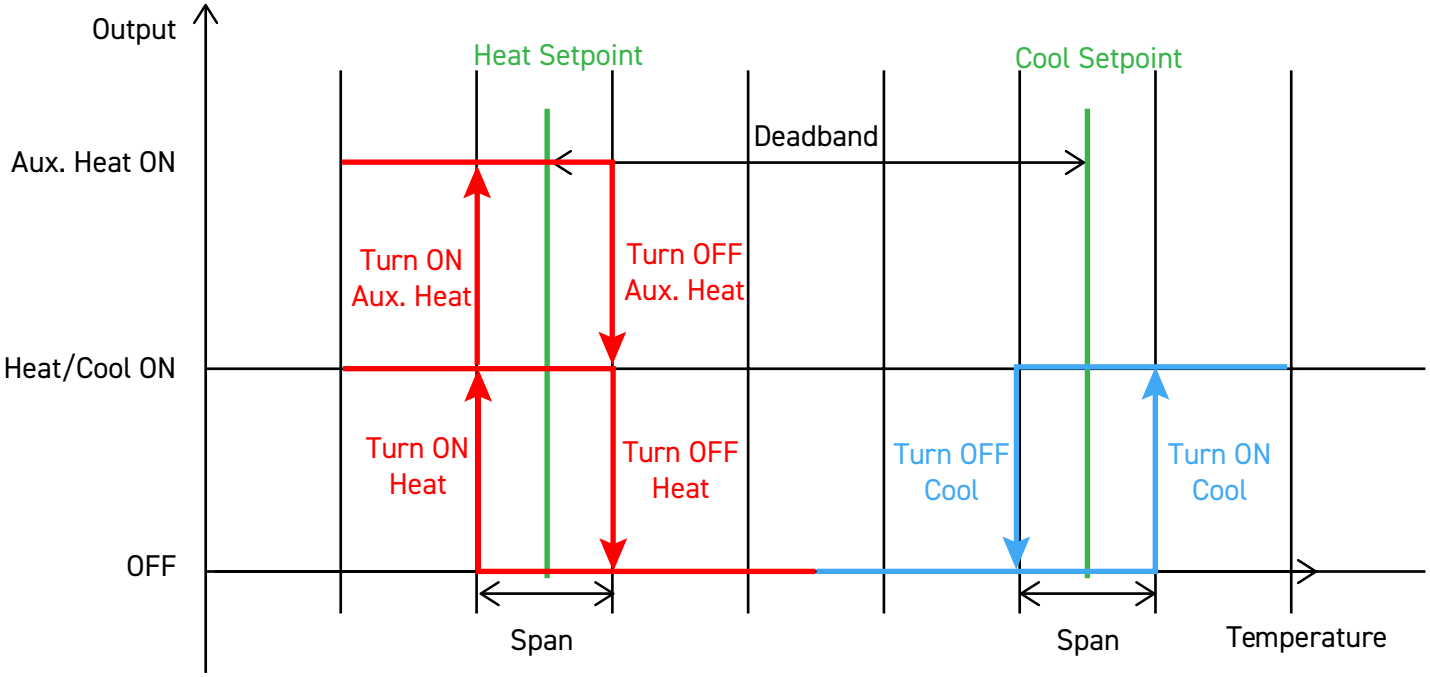

Fan speed selection

Fan speed can be directly adjusted at Home screen.

Press [FAN] button to select fan speed: Low/Med/High/Auto.

If Auto Fan speed is selected:

- If there is no Heat/Cool demand, fan speed keeps at Low
- Fan output depends on the difference between room temperature and setting temperature

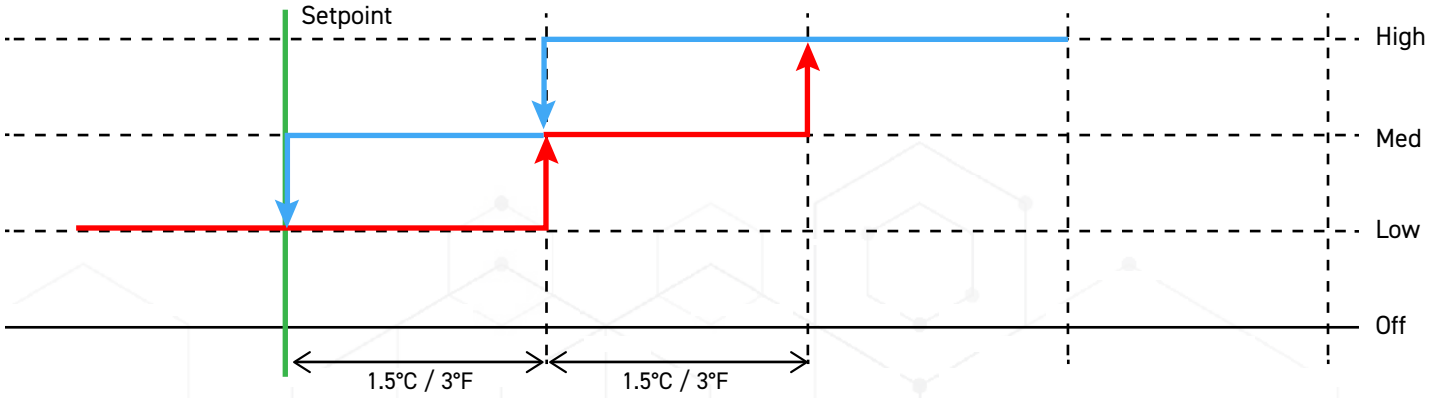

- In Auto Fan Speed Mode, there is a minimum 4 minutes switching back and forth (delay) between Fan Speeds

The Unilux Thermostat must be installed by a trained technician. Failure to follow these instructions carefully may result in product damage

⚠ Caution: Electrical Hazard

Equipment and wiring can cause electrical shock and equipment damage.

Disconnect power before starting installation.

If installing thermostat in standard interior wall, start with step one on this page. If installing into a North American electrical box, skip to page 11.

When Installing Direct to Wall

1. Gather materials and tools

To install your new thermostat, you will need the following tools:

- Screws and bolts (provided with the thermostat)
- Screwdriver
- Bubble Level

2. Mount thermostat to wall

- Detach the bottom housing from the thermostat by pulling the two pieces apart.
- Wire the thermostat according to the diagrams found on pages 12 and 13 by passing the wires through the bottom housing, to the top housing terminal block.

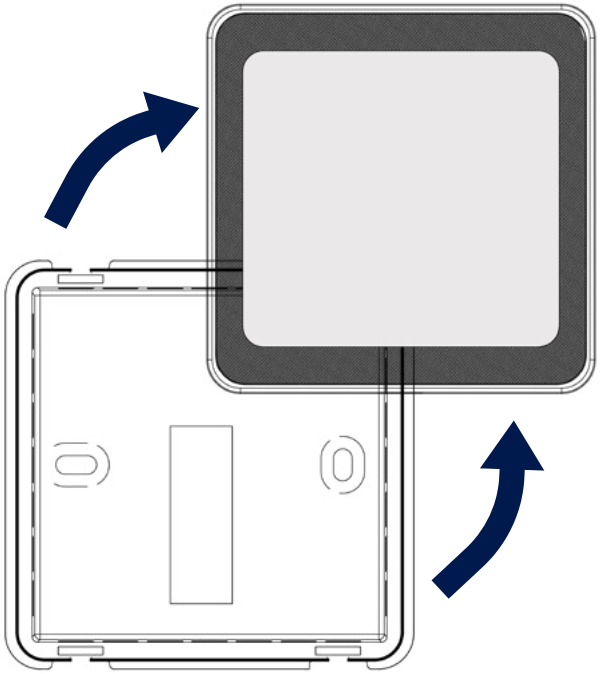

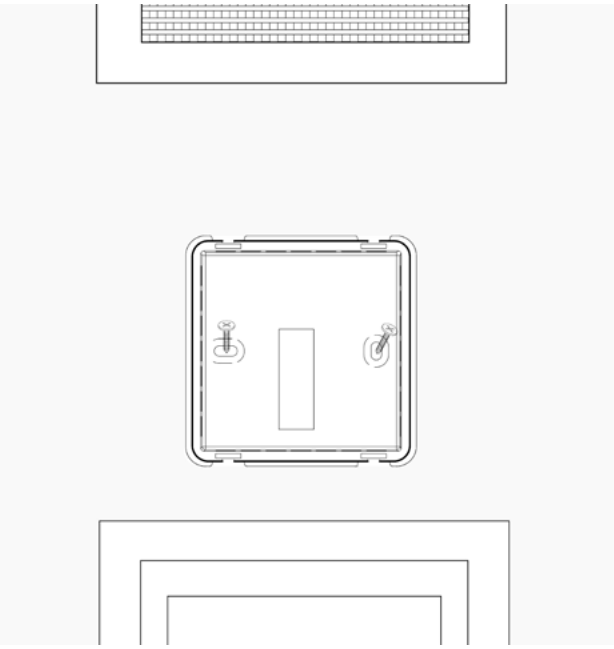

- Secure the bottom housing to the desired wall with the provided screws. We recommend using a bubble level to ensure the housing is straight before fully mounting to wall.
- Reattach the top housing to the bottom.

When Installing in North American Electrical Box

1. Check the compatibility of your electrical box

Before purchasing your new thermostat, it is important to check that the mounting holes for the thermostat will fit your electrical box. If your electrical box is a standard North American electrical box, you may encounter difficulties in installing the thermostat.

2. Gather materials and tools

To install your new thermostat, you will need the following materials and tools:

- Steel installation plate
- Plastic interface plate
- Screws and bolts (provided with the thermostat)
- Screwdriver
- Bubble Level

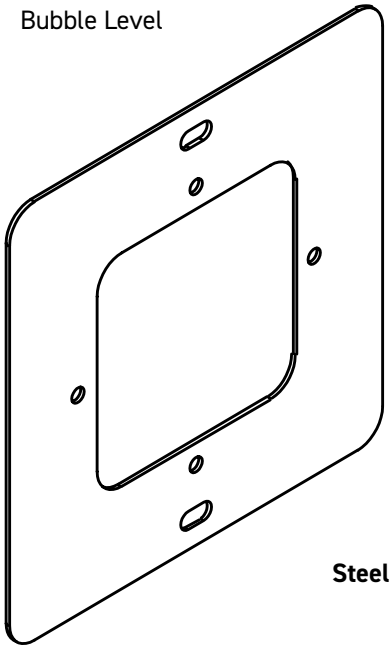

Steel Installation plate

3. Install the Steel Installation Plate

- Turn off the power supply to the electrical box by switching off the circuit breaker or removing the fuse.
- Remove the cover plate from the electrical box.
- Position the steel installation plate onto the electrical box so that the holes line up with the mounting holes on the electrical box.
- Secure the steel installation plate to the electrical box using screws and bolts provided with the thermostat.
- Check that the steel installation plate is level.

4. Install the Plastic Interface Plate and Thermostat

- Detach the bottom housing from the thermostat by pulling the two pieces apart.
- Position the plastic interface plate to the steel installation plate by aligning the holes.
- Wire the thermostat according to the diagrams found on pages 12 and 13 by passing the wires through the steel plate, plastic interface plate, and bottom housing, to the top housing terminal block.
- Position the bottom housing onto the plastic interface plate and align the mounting holes on the housing with the holes on the steel installation plate.
- Secure both the plastic interface plate and thermostat to the steel installation plate using provided hardware.
- Reattach top housing to bottom housing.
- Turn on the power supply to the electrical box by switching on the circuit breaker or replacing the fuse.

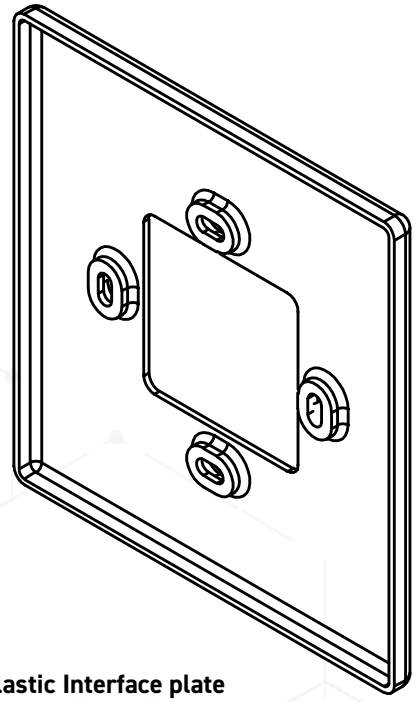

Plastic Interface plate

Wiring Instructions for Fan Coils

(A) 2-Pipe Standard

Symbols	Terminals
R	24VAC Hot
C	24VAC Common
W	*not connected*
Y/W	Heat/Cool valve relay
G1,G2,G3	Low, Med, High fan relays
TH, GND	Remote 10kΩ water temperature sensor (BAPI 10K-3)
DP	Drain pan
FZ	Freezestat

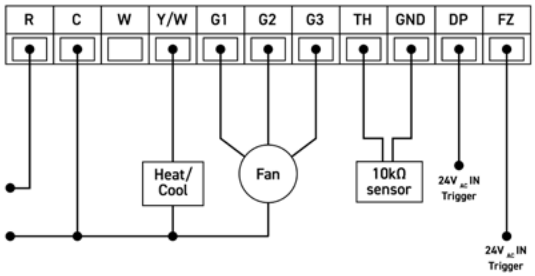

(B) 4-Pipe Standard

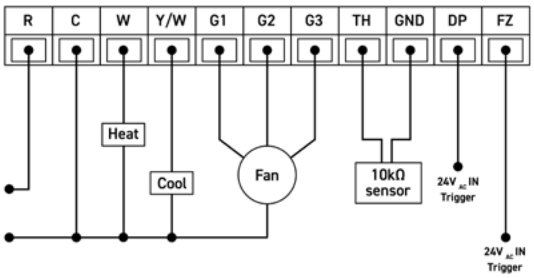

Symbols	Terminals
R	24VAC Hot
C	24VAC Common
W	Heat valve relay
Y/A	Cool valve relay
G1,G2,G3	Low, Med, High fan relays
TH, GND	not connected
DP	Drain pan
FZ	Freezestat

(C) 2-Pipe with Auxiliary Heating

Symbols	Terminals
R	24VAC Hot
C	24VAC Common
W	Auxiliary heater relay
Y/A	Heat/Cool valve relay
G1,G2,G3	Low, Med, High fan relays
TH, GND	Remote 10kΩ water temperature sensor (BAPI 10K-3)
DP	Drain pan
FZ	Freezestat

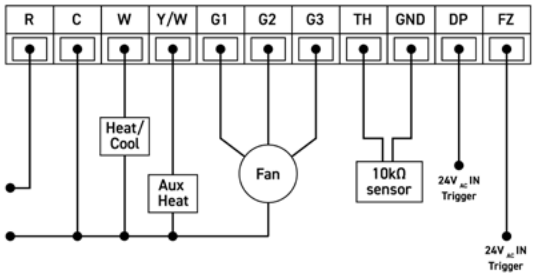

(D) 2-Pipe with Aquastat

Symbols	Terminals
R	24VAC Hot
C	24VAC Common
W	Connects to Heat relay of aquastat
Y	Connects to Cool relay of aquastat
G1,G2,G3	Low, Med, High fan relays
TH, GND	not connected
DP	Drain pan
FZ	Freezestat

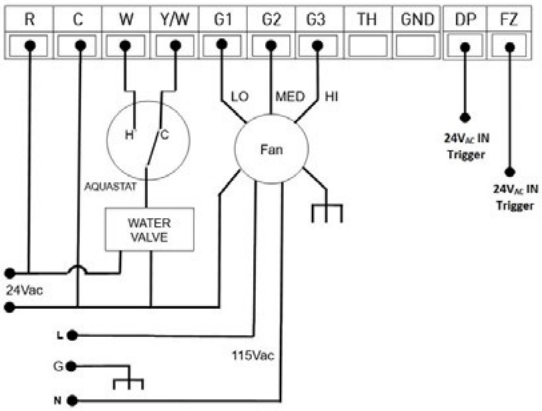

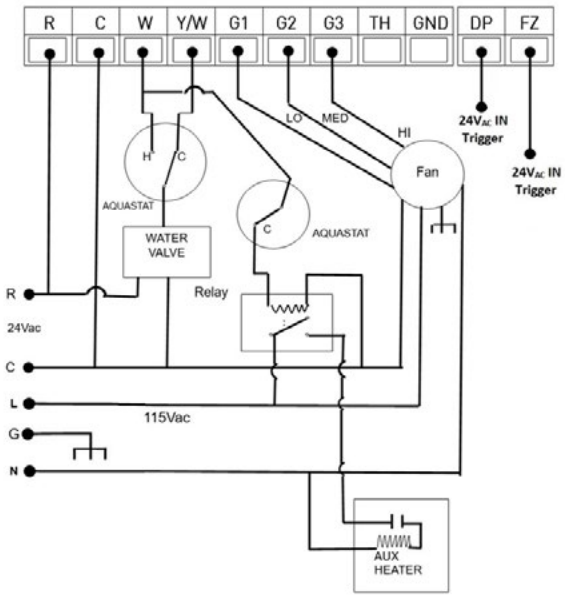

(E) 2-Pipe with Auxiliary Heating & Aquastat

Symbols	Terminals
R	24VAC Hot
C	24VAC Common
W	Connects to Heat/Cool of aquastat
Y	Connects to Cool valve relay
G1,G2,G3	Low, Med, High fan relays
TH, GND	not connected
DP	Drain pan
FZ	Freezestat

Initial Set Up Instructions

There are a few settings that must be configured by the installer before the thermostat is ready for use.

1. Wake Up Thermostat

- Tap [POWER] to wake up the thermostat.

2. Clock and Date setting

- Press [CLOCK] to start the setting
- The day of the week will start flashing at the top of the screen
- Press [▲] / [▼] to change the day of week
- Press [CLOCK] again to confirm day of week setting and start to adjust hour
- Press [▲] / [▼] to change the hour
- Press [CLOCK] again to confirm hour setting and start to adjust minutes
- Press [▲] / [▼] to change the minutes
- Press [CLOCK] again to confirm
- Press [SELECT] to confirm and exit

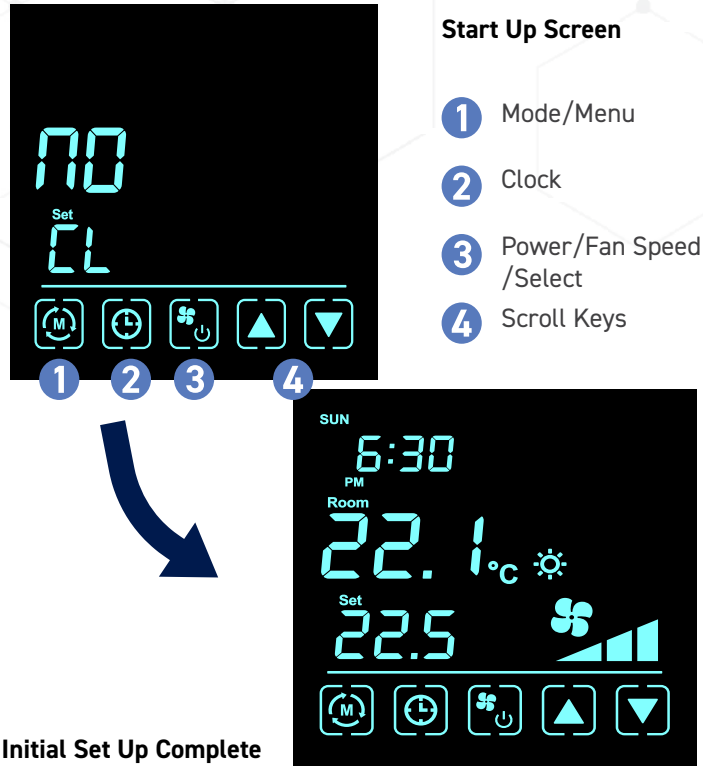

Start Up Screen

1. Mode/Menu
2. Clock
3. Power/Fan Speed /Select
4. Scroll Keys

Initial Set Up Complete

3. Set System Mode

The default system mode is set to 0 for a 2-Pipe Standard fan coil. If connecting to another system, complete the following steps:

- Hold [MENU] to enter Advanced Settings menu
- Continue pressing [MENU] to cycle through settings until reaching P02 (System Mode)
- There are four system modes, press [▲] / [▼] to select the required mode based on the chart to the right
- Press [SELECT] to confirm and exit

Fan Coil System	Mode
(A) 2-Pipe Standard	2P
(B) 4-Pipe Standard	4P
(C) 2-Pipe w/Auxiliary Heating	2H
(D) 2-Pipe w/Aquastat	2A
(E) 2-Pipe w/Auxiliary Heating & Aquastat	2A

4. Set Temperature Display

The default temperature display is set to °C. If in the US, do the following to set to °F.

- Hold [MENU] to enter Advanced Settings menu
- Continue pressing [MENU] to cycle through settings until reaching P03 (Temperature Display)
- Press [▲] / [▼] to select either Fahrenheit or Celsius
- Press [SELECT] to confirm and exit

Control your thermostat from anywhere, anytime

The Unilux Thermostat App is the easiest way to control your thermostat wherever you are.

We take your privacy seriously. Visit www.uniluxhvac.com to find out how we protect your data.

Steps to connect to wifi for first time (for IOS and Android devices)

1. Make sure your device is connected to a Wi-Fi network and close to thermostat.
2. On thermostat, hold [MENU] to enter the Advance Settings menu
   - Continue pressing [MENU] until you've reached P21
   - Press [▲] / [▼] to select "Par"
   - Press [SELECT] to confirm
3. Open the app and tap the plus sign (+) in the top right corner.
4. Enter the Wi-Fi network name and password and tap "Connect."
5. Wait while the app searches for your thermostat.
6. Once the thermostat is found, confirm that you want to connect it to the Wi-Fi network.
7. Wait for the device to connect.
8. The app will take you back to the main page, and the thermostat will now appear under the "Devices" menu.
9. A Wi-Fi symbol will also appear in the top right corner of the thermostat's screen.

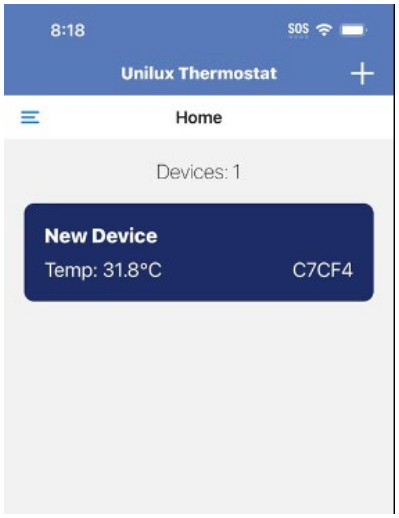

Thermostat Overview

Navigation Keys

1 Mode/Menu
Quick change from cooling to heating. Hold to cycle through the Advanced Settings menu. See page 15 for Advanced Settings.

2 Clock
Sets the current date and time shown on the home screen and sets programs (schedules). See page 16 for instructions on programs.

3 Power/Fan Speed/Select
Wakes up or powers down your thermostat, toggles the fan speed, and functions as the selection key.

4 Scroll Keys

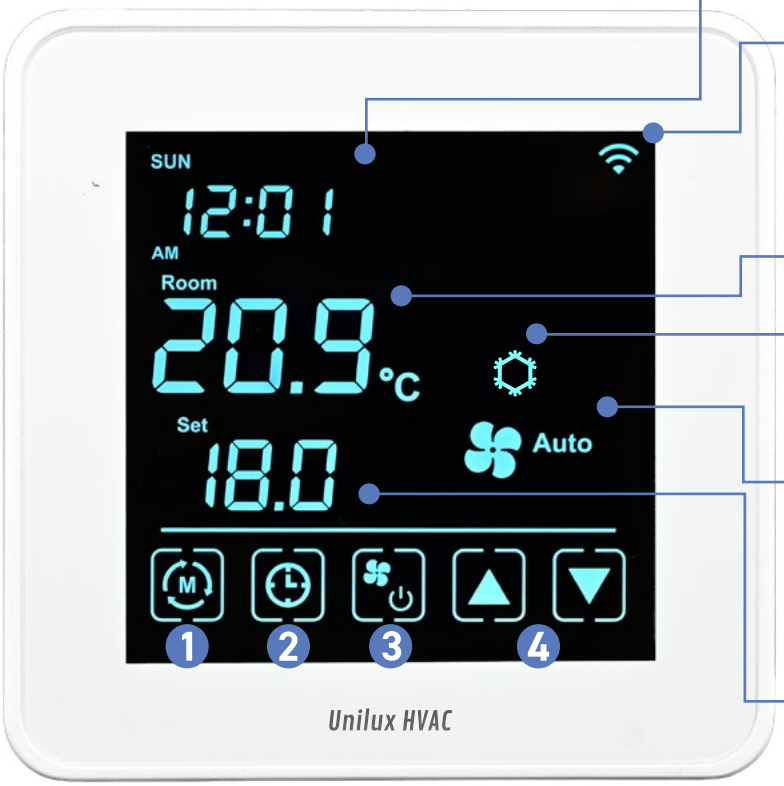

Date and Time

Wi-Fi Signal
To connect to Wi-Fi, download the Unilux Thermostat App (available on Android and iOS)

Current Temperature

Operating Mode
To quick change between heat and cool, press [MODE]. See page 18 for full details

Fan Speed
To adjust the fan speed:

- Press [FAN SPEED]
- Press the [▲] / [▼] keys

Set Temperature
To adjust the set temperature, press the [▲] / [▼] keys

Battery Backup

In the event of a power outage, all settings (except for home screen layout and sleep countdown) and program schedules are saved in your thermostat memory. During the outage, the backup battery will last up to one hour with the back-light dimmed. Your Wi-Fi will need to be reconnected to your thermostat once power resumes.

Advanced Settings

P00 - Sleep Screen Layout

Your thermostat is equipped with four screen layouts to choose from, based on the information you'd like to see while your thermostat is asleep. Your default home screen is option "0".

To select a new layout:

- Hold [MENU] to enter the Advance Settings menu
- Press [▲] / [▼] to cycle through your three layout options
- Press [SELECT] to confirm your screen selection and exit the Advanced Settings menu

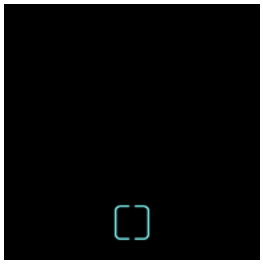

Option 0

Option 1

Option 2

Option 3

P01 - Sleep Countdown

Your thermostat screen will automatically enter sleep mode to conserve energy after 20 seconds following usage. You can adjust this countdown anywhere between 0-120 seconds.

To change sleep countdown:

- Hold [MENU] to enter the Advance Settings menu
- Continue pressing [MENU] until reaching P01
- Press [▲] / [▼] to increase/decrease the countdown
- Press [SELECT] to confirm and exit the Advanced Settings menu

P02 - System Mode

⚠ **This setting should only be modified by an HVAC technician. Improper selection of the system mode will cause your thermostat to not function.**

The system mode refers to the type of fan coil system your thermostat is connected to. See the initial set up guide on page 12 for instructions on selecting the system mode.

P03 - Temperature Display Unit

The temperature unit of your thermostat should be set to your region's standard measurement during installation.

To adjust your temperature display unit:

- Hold [MENU] to enter the Advance Settings menu
- Continue pressing [MENU] until reaching P03
- Press [▲] / [▼] to choose between °C or °F
- Press [SELECT] to confirm and exit the Advanced Settings menu

P04 - Time Display Format

By default, your thermostat uses a 12-hour clock. If preferred, you can set your thermostat to a 24-hour clock instead.

To toggle your clock format:

- Hold [MENU] to enter the Advance Settings menu
- Continue pressing [MENU] until reaching P04
- Press [▲] / [▼] to choose between 12 or 24
- Press [SELECT] to confirm and exit the Advanced Settings menu.

P05 - Temperature Offset

If your thermostat is in an area of your suite that is colder or warmer than the rest of your home, you can offset the thermostat's temperature reading to compensate. Before you adjust this setting, you will need a thermometer (inexpensive options can be found in any hardware store) to measure the temperature near your thermostat, and again in a room that feels similar to the rest of your suite. The difference in temperature is what you need to offset your thermostat at. Your thermostat can be offset +/- 5 °C or 10 °F.

To offset your thermostat temperature:

- Hold [MENU] to enter the Advance Settings menu
- Continue pressing [MENU] until reaching P05
- Press [▲] / [▼] to offset your temperature
- Press [SELECT] to confirm and exit the Advanced Settings menu

P06 - Switching Differential - Heat Mode

The switching differential while in heat mode refers to the delay in call for heating. **We recommend keeping your thermostat at the default 2 °C (4 °F) setting**, however you can adjust the differential between 2-4 °C (4-8 °F) if desired.

To change your switching differential while in heat mode:

- Hold [MENU] to enter the Advance Settings menu
- Continue pressing [MENU] until reaching P06
- Press [▲] / [▼] to adjust your setting
- Press [SELECT] to confirm and exit the Advanced Settings menu

P07 - Switching Differential - Cool Mode

The switching differential while in cool mode refers to the delay in call for cooling. **We recommend keeping your thermostat at the default 2 °C (4 °F) setting**, however you can adjust the differential between 2-4 °C (4-8 °F) if desired.

To change your switching differential while in cool mode:

- Hold [MENU] to enter the Advance Settings menu
- Continue pressing [MENU] until reaching P07
- Press [▲] / [▼] to adjust your setting
- Press [SELECT] to confirm and exit the Advanced Settings menu

P08 - Program Mode

To save energy and live comfortably, your thermostat allows you to program up to four scheduled temperatures in each day. There are three types of programs available:

- 7-Day Program - set a unique schedule for each day of the week
- 1-Day Program - set one schedule that is used every day of the week
- 5+1+1Day Program: set one schedule for all weekdays with unique schedules for Saturday and Sunday

The default program on your thermostat is set to a 7-Day Program. If you would like to use this program, skip to part B of the following instructions.
If you would like to use a different program mode, continue to part A.

To set a program:

A)
- Hold [MENU] to enter the Advance Settings menu
- Continue pressing [MENU] until reaching P08
- Press [▲] / [▼] to cycle through the following options:

Program Type	Mode
No Program	noP
1-Day Program	1
5+1+1 Day Program	5
7-Day Program	7

- Press [SELECT] to confirm and exit the Advanced Settings menu

B)

- Hold [CLOCK] until your thermostat enters program mode. Depending on the type of program selected in part A, you will either see:

7 or 5+1+1 Day Program:

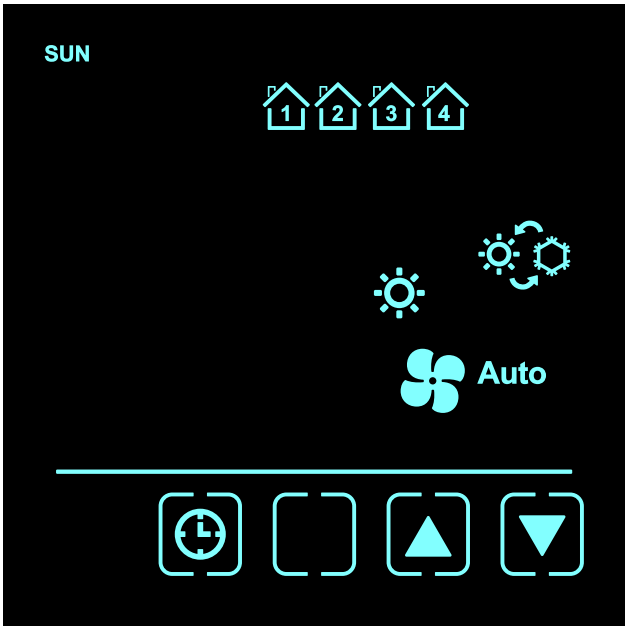

- Press [▲] / [▼] to navigate to the desired day
- Press [CLOCK] to confirm the day
- Set Schedule 1 by pressing [▲] / [▼] to select the hour you want the schedule to start

Note: you can see which program out of four you are scheduling for the indicated day with this icon:

- Press [CLOCK] to confirm
- Press [▲] / [▼] to select the minute you want the schedule to start
- Press [CLOCK] to confirm
- Press [▲] / [▼] to select the temperature you want at the chosen time
- Press [CLOCK] to confirm
- Schedule 1 is now set, and you are ready to repeat these steps to set Schedules 2-4 for your selected day.

After you have set all four schedules, you will be prompted to repeat this process for the next day(s).

1-Day Program :

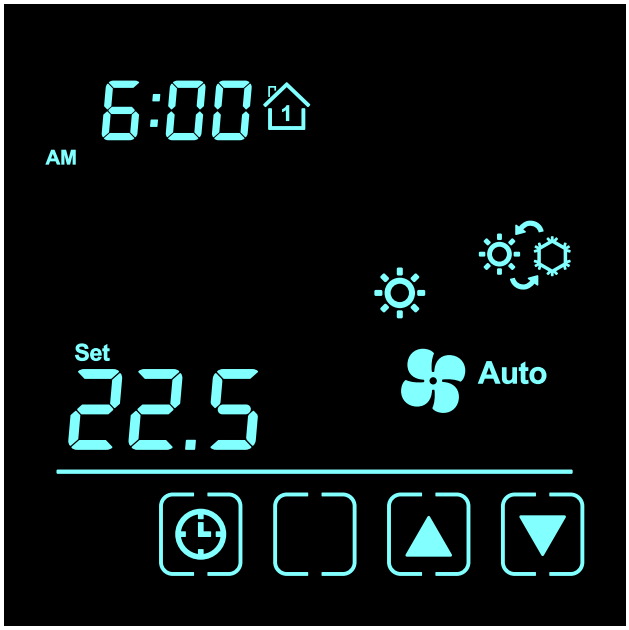

- Set Schedule 1 by pressing [▲] / [▼] to select the hour you want the schedule to start

Note: you can see which program out of four you are scheduling for with this icon:

- Press [CLOCK] to confirm
- Press [▲] / [▼] to select the minute you want the schedule to start
- Press [CLOCK] to confirm
- Press [▲] / [▼] to select the temperature you want at the chosen time
- Press [CLOCK] to confirm
- Schedule 1 is now set, and you are ready to repeat these steps to set Schedules 2-4.

After you have set all four schedules, you will be returned to the home screen.

You may override your scheduled program at anytime, either temporarily or permanently.

To set a temporary hold on your program:

- From the home screen, press [▲] / [▼] to override the temperature setpoint
- The "Program" icon on your thermostat will disappear

Your temporary hold will remain until it is time for your next scheduled program which will resume as normal

To set a permanent hold on your program:

- Hold [MENU] to enter the Advance Settings menu
- Continue pressing [MENU] until reaching P08
- Press [▲] / [▼]until you reach mode noP for No Program
- The permanent hold icon will appear on your screen
- Press [SELECT] to confirm and exit the Advanced Settings menu

Your permanent hold will indefinitely maintain a consistent temperature in your suite.

P09 - Vacation Hold

If you have a program set but are going away, you can set a Vacation Hold to pause your programs for up to 99 days.

To set a vacation hold:

- Hold [MENU] to enter the Advance Settings menu
- Continue pressing [MENU] until reaching P09
- Press [▲] / [▼] to select the number of days you want the hold to take place
- Press [SELECT] to confirm and exit the Advanced Settings menu
- Set the desired temperature from your home screen to be held for the duration of your vacation

P10 - Temperature/Humidity Reading

Your thermostat can display either the temperature of your room, or the humidity levels. By default it reads the Temperature(t).

To adjust thermostat reading:

- Hold [MENU] to enter the Advance Settings menu
- Continue pressing [MENU] until reaching P10
- Press [▲] / [▼] to toggle between H and t
- Press [SELECT] to confirm and exit the Advanced Settings menu

P15 - Operating Mode

Your thermostat operates in four standard modes: Heat, Cool, Auto, and Off. See page 5 for full functionality details. You can press the [MENU]/[MODE] button to quick change between heating and cooling, or you can do the following to access all operating modes:

- Hold [MENU] to enter the Advance Settings menu
- Continue pressing [MENU] until reaching P15
- Press [▲] / [▼] to switch between modes
- Press [SELECT] to confirm and exit the Advanced Settings menu

P16 - Heating Changeover Temperature (Auto Mode)

The Auto mode of your thermostat works according to both a set heating and cooling temperature. When your suite temperature drops to the designated changeover temperature, your thermostat triggers your heat to turn on. By default, your heating changeover temperature is 18 °C (64 °F) but can range between 10 - 25 °C (50-77 °F).

To adjust your heating changeover temperature:

- Ensure your thermostat is in auto mode
- Hold [MENU] to enter the Advance Settings menu
- Continue pressing [MENU] until reaching P16
- Press [▲] / [▼] to set your desired changeover temperature
- Press [SELECT] to confirm and exit the Advanced Settings menu

Note: Your heating changeover temperature must be at least 2 °C (4 °F) away from your cooling changeover temperature.

P17 - Cooling Changeover Temperature (Auto Mode)

The Auto mode of your thermostat works according to both a set heating and cooling temperature. When your suite temperature rises to the designated changeover temperature, your thermostat triggers your cooling to turn on. By default, your cooling changeover temperature is 23 °C (73 °F) but can range between 20 - 40 °C (68-104 °F).

To adjust your cooling changeover temperature:

- Ensure your thermostat is in auto mode
- Hold [MENU] to enter the Advance Settings menu
- Continue pressing [MENU] until reaching P17
- Press [▲] / [▼] to set your desired changeover temperature
- Press [SELECT] to confirm and exit the Advanced Settings menu

Note: Your cooling changeover temperature must be at least 2 °C (4 °F) away from your heating changeover temperature.

P19 / P20 - Wi-Fi & Mobile Reset

If you need to reconnect your thermostat to your Wi-Fi network, or are a new suite owner trying to override a previous owner's access, you can follow these steps.

To disconnect from your Wi-Fi:

1. Hold the [MENU] and [SELECT] buttons until P19 appears at the top of your screen
2. Press [▲] / [▼] to select "YES"
3. Press [SELECT] to confirm
4. Press [MENU} until P20 appears
5. Press [▲] / [▼] to select "YES"
6. Press [SELECT] to confirm and return to home screen

Steps to Reconnect to Wi-Fi when previously connected to an IOS device.

1. Make sure your device is connected to a Wi-Fi network and close to thermostat.
2. Hold the [MENU] and [SELECT] buttons until P19 appears at the top of your screen
   - Clear the existing Wi-Fi configuration through P19
3. On thermostat, hold [MENU] to enter the Advance Settings menu
   - Continue pressing [MENU] until you've reached P21
   - Press [▲] / [▼] to select "Par"
   - Press [SELECT] to confirm
4. Open the app and tap the plus sign (+) in the top right corner.
5. Enter the Wi-Fi network name and password and tap "Connect."
6. Wait while the app searches for your thermostat.
7. Once the thermostat is found, confirm that you want to connect it to the Wi-Fi network.
8. Wait for the device to connect.
9. The app will take you back to the main page, and the thermostat will now appear under the "Devices" menu.
10. A Wi-Fi symbol will also appear in the top right corner of the thermostat's screen.

Steps to Reconnect to Wi-Fi when previously connected to an Android device.

1. Make sure the device is connected to Wi-Fi and close to thermostat.
2. Hold the [MENU] and [SELECT] buttons until P19 appears at the top of your screen
   - Clear the existing Wi-Fi configuration through P19
3. On thermostat, hold [MENU] to enter the Advance Settings menu
   - Continue pressing [MENU] until you've reached P21
   - Press [▲] / [▼] to select "Par"
   - Press [SELECT] to confirm
4. On the app home screen with other connected devices, tap the "+" symbol in the top right corner.
5. Enter the Wi-Fi network name and password.
6. Tap "Connect."
7. Wait while the device searches for available Wi-Fi networks.
8. Select the desired Wi-Fi network.
9. Confirm that the device has successfully joined the Wi-Fi network.
10. Wait for the device to finish connecting.
11. You will see the device added to the home screen.
12. A Wi-Fi symbol will appear on the thermostat in the top right corner.

Note: To perform a full factory reset of your thermostat, turn the breaker switch connected to your fan coil off and back on. After a factory reset, you must follow the set up steps installation guide for your thermostat to function.

Warning Symbols

Anti-Freeze Mode

The defrost indicator is triggered under conditions when your unit senses low temperatures and automatically works to conserve operating temperatures.
No action required.

Drain Pan Mode

The water droplet indicator is triggered when your drain pan is close to overflowing. Your HVAC unit will stop operating until serviced.
Please contact your HVAC service provider.

Error Code 1

When water temperature sensor is not connected or if it has shorted, your thermostat will show "E1" and heat/cool outputs will turn OFF.
Please contact your HVAC service provider.