3.2X1.6X0.5 (mm) WiFi/Bluetooth Ceramic Chip Antenna

Engineering Specification

1. Product Number

YF	3216	H1	X	2G45
1	2	3	4	5

迎丰天线技术

(1)Product Type	Chip Antenna
(2)Size Code	3.2x1.6x0.5mm
(3)Type Code	H1
(4)Packing	Plastic Packaging
(5)Frequency	2.45GHz

Manufacturer:SHENZHENYINGFENGANTENNATECHNOLOGYCO.,LTD
Address: Building 7, Phase 2, Yungu, Pingshan Road, Xili, Nanshan District, Shenzhen City, Guangdong Province

2. Features

*Stable and reliable in performances
*Low temperature coefficient of frequency
*Low profile, compact size
*RoHS compliance
*SMT processes compatible

3. Applications

*Bluetooth earphone systems
*Hand-held devices when WiFi /Bluetooth functions are needed, e.g., Smart phone.
*IEEE802.11 b/g/n
*ZigBee
*Wireless PCMCIA cards or USB dongle

4. Description

Yingfeng chip antenna series are specially designed for WiFi/Bluetooth applications. Based on yingfeng proprietary design and processes, this chip antenna has excellent stability and sensitivity to consistently provide high signal reception efficiency.

5. Electrical Specifications (80 x 40 mm² ground plane)

5-1. Electrical Table

Characteristics		Specifications	Unit
Outline Dimensions		3.2x1.6x0.5	mm
Working Frequency		2400~2500	MHz
VSWR		2 Max.	
Impedance		50	Ω
Polarization		Linear Polarization	
Gain	Peak	2.5 (typical)	dBi
	Efficiency	78 (typical)	%

5-2. Return Loss & VSWR

Return Loss (S_{11})

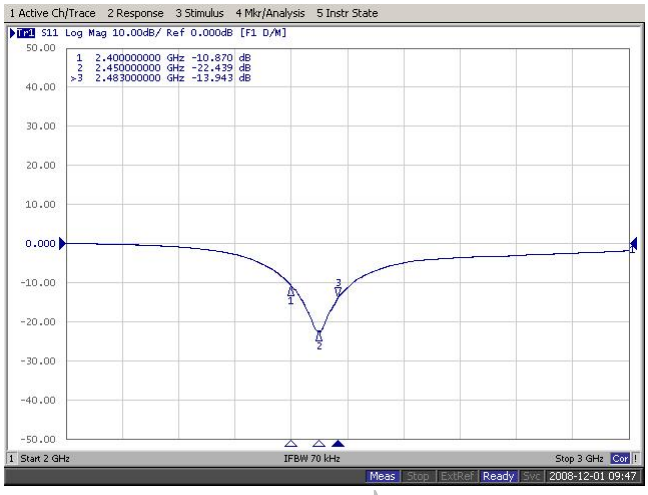

VSWR(S_{11})

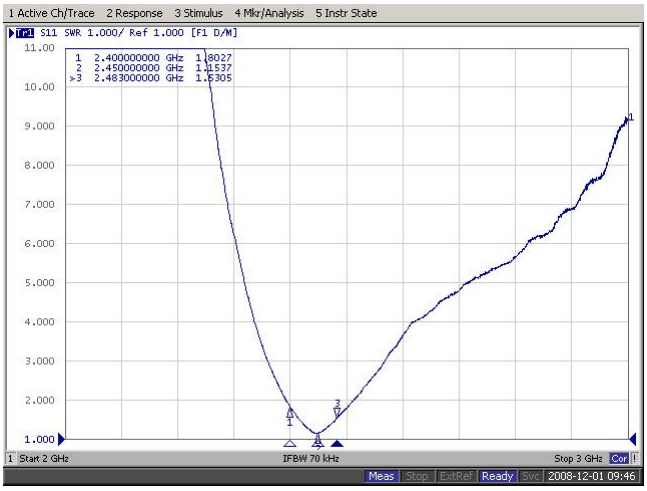

6. Antenna Dimensions & Test Board (unit: mm)

a. Antenna Dimensions

Dimension and Terminal Configuration

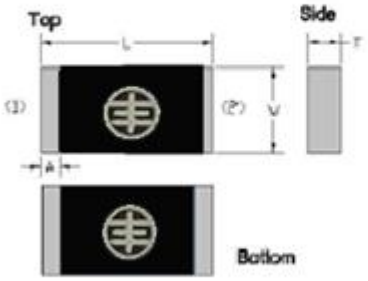

Dimension (mm)	
L	3.15+-0.15
W	1.55+-0.15
T	0.50+-0.10
A	0.35+-0.10

No.	Terminal Name
1	Feeding point
2	GND

b. Test Board with Antenna

迎丰天线技术

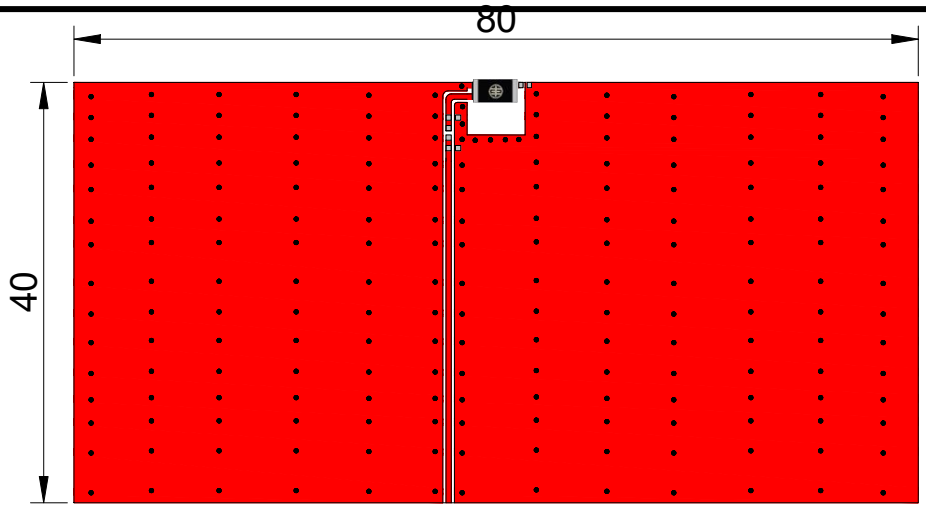

Unit: mm

7. Radiation Pattern (80 x 40 mm² ground plane)

7-1. 3D Gain Pattern @ 2442 MHz

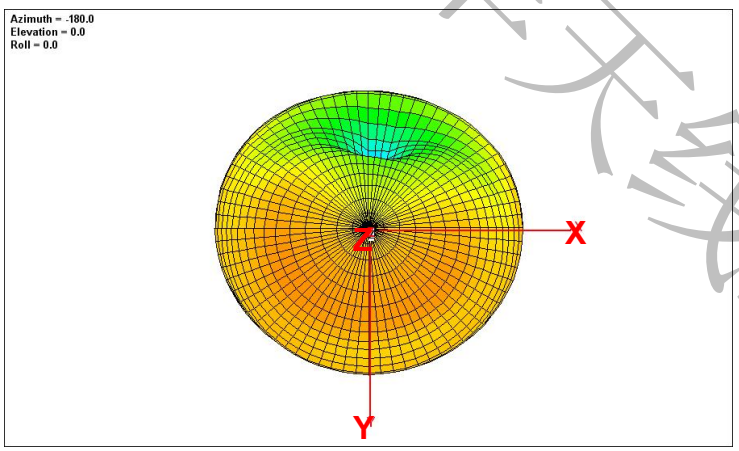

迎丰天线技术

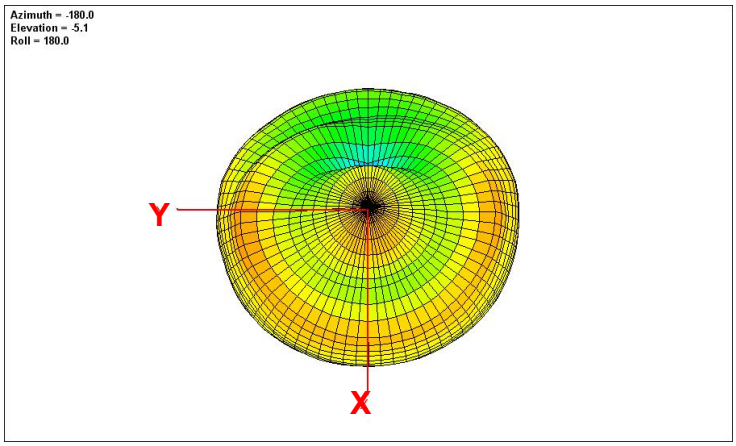

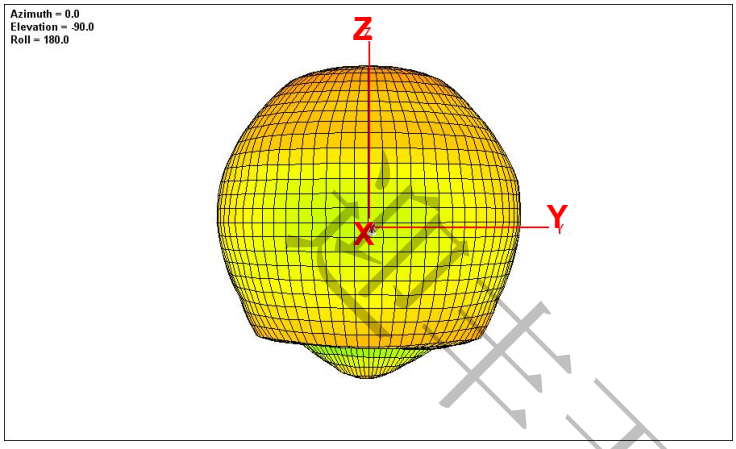

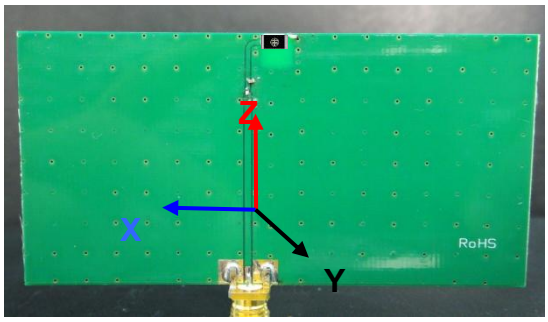

7-2. 3D Efficiency Table

Frequency(MHz)	2400	2410	2420	2430	2442	2450	2460	2470	2480	2490	2500
Efficiency (dB)	-1.4	-1.0	-0.9	-0.7	-0.7	-0.8	-0.9	-1.1	-1.2	-1.3	-1.4
Efficiency (%)	72.8	73.7	74.3	74.4	75.5	75.0	74.0	73.6	73.1	72.6	71.5
Gain (dBi)	2.1	2.2	2.3	2.4	2.5	2.5	2.4	1.8	1.7	1.6	1.4

迎丰天线技术

7-3. 3D Efficiency vs. Frequency

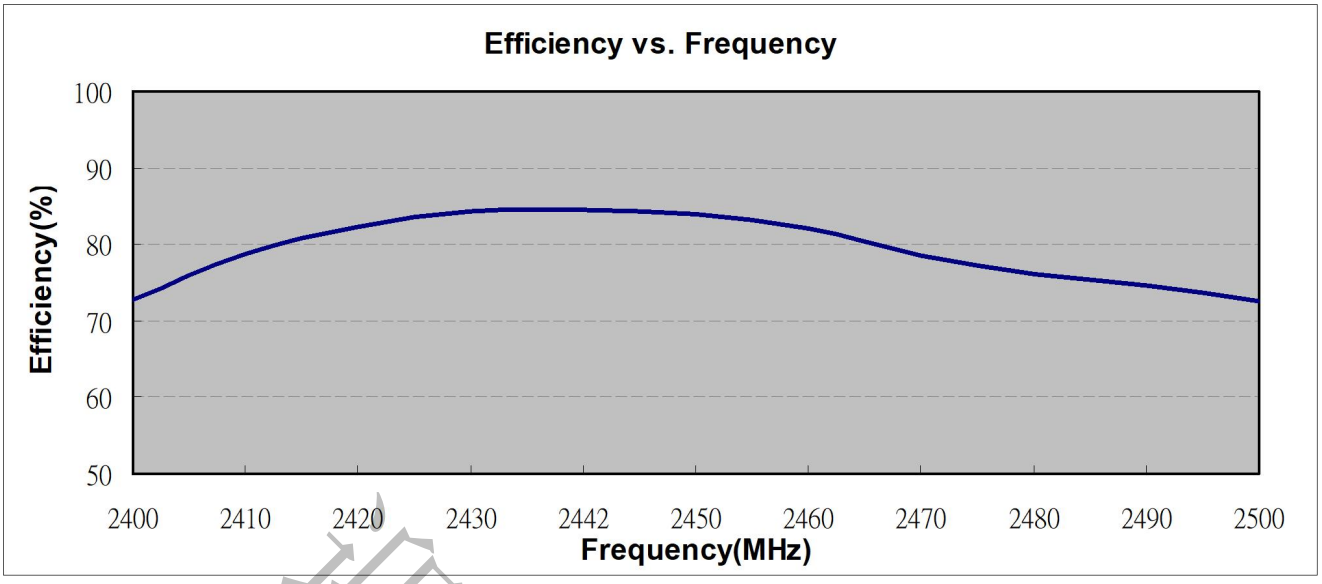

8. Layout Guide

a. Solder Land Pattern:

Land pattern for soldering (gray marking areas) is as shown below. Depending on Customer's requirement, matching circuit as shown below is also recommended.

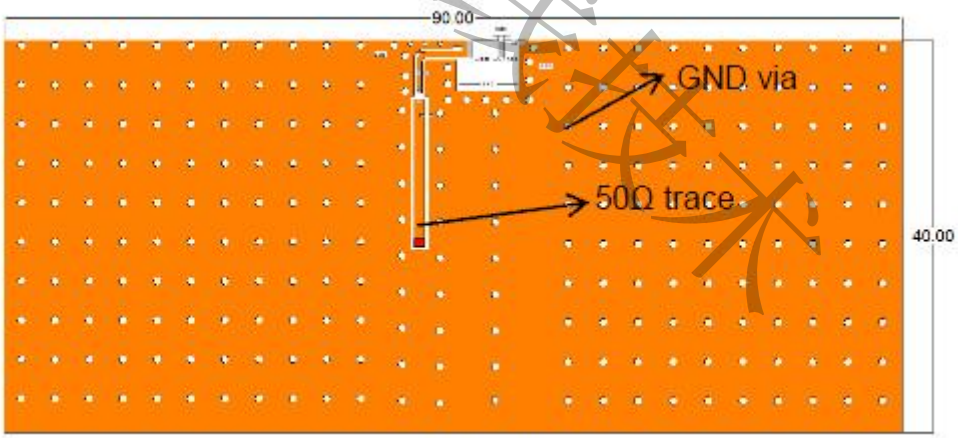

Top view

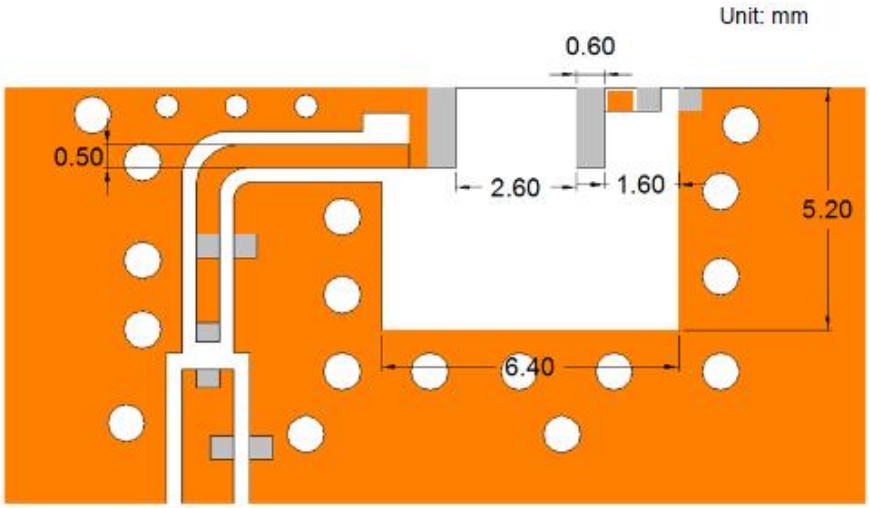

Detail view

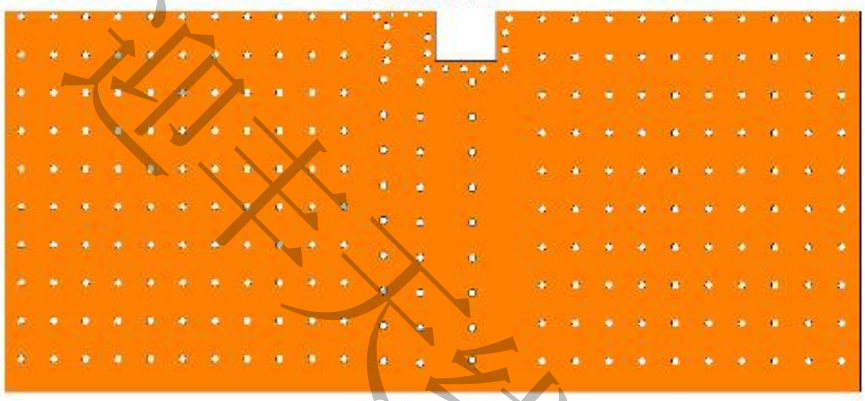

Bottom view

迎丰天线技术

9. Frequency tuning

a. Chip antenna tuning scenario：

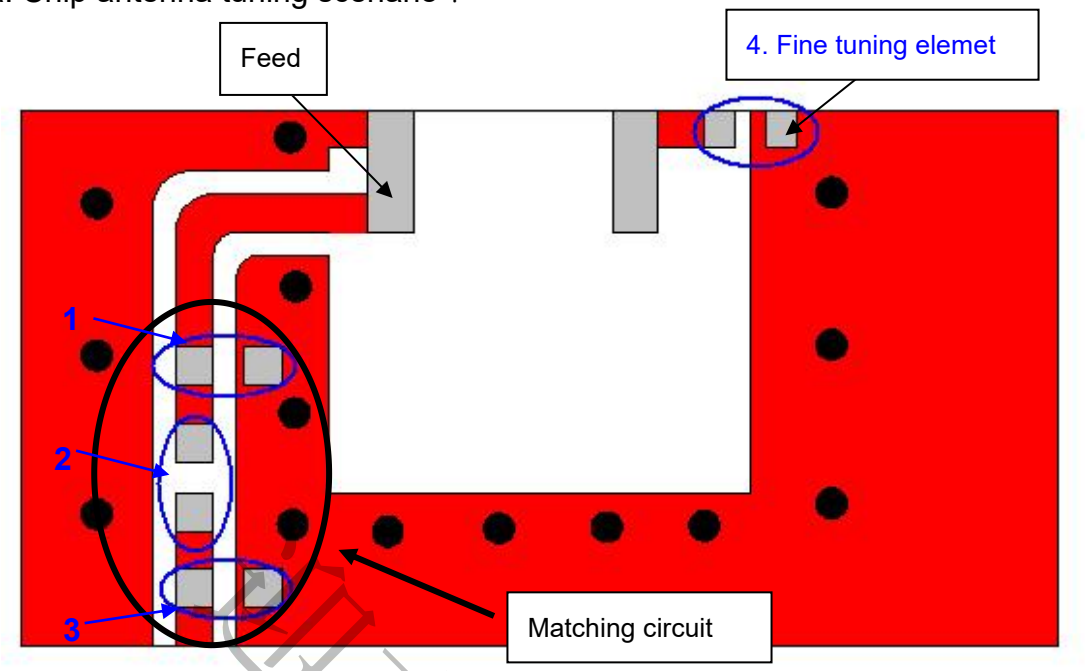

b. Matching circuit：(Center frequency is about 2442 MHz @ 80 x 40 mm^2 ground plane)

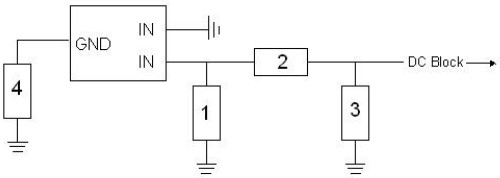

System Matching Circuit Component			
Location	Description	Vendor	Tolerance
1	1.2 pF*	Murata (0402)	±0.1 pF
2	10PF*	Murata(0402)	±0.5 PF
3	N/A*	-	-
Fine tuning element 4	1.5 pF*	Murata (0402)	±0.1 pF

*Typical reference values which may need to be changed when circuit boards or part vendors are different.

深圳市迎丰天线技术有限公司

c. Fine tuning element vs. Center frequency

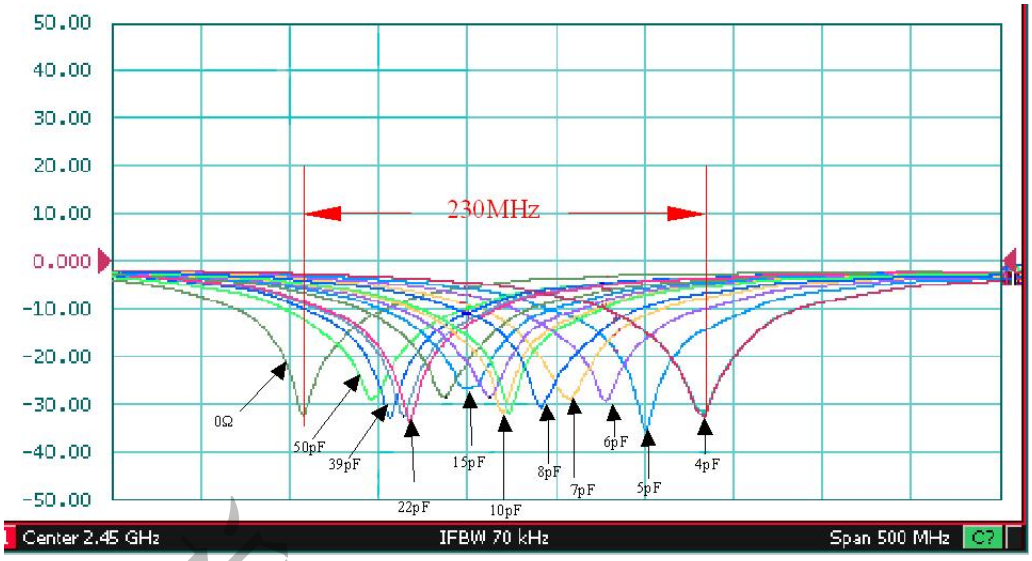

10. Soldering Conditions

a. Typical Soldering Profile for Lead-free Process

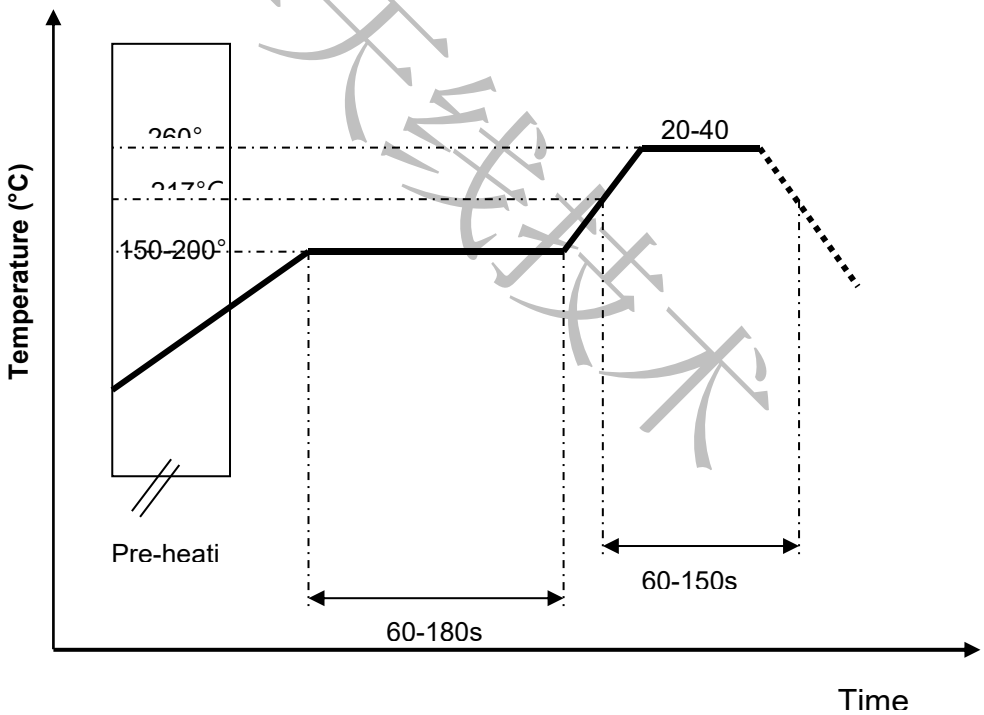

11. Packing

(1) Quantity/Reel: 5000 pcs/Reel:

Reel and Taping Specification

Reel Specification

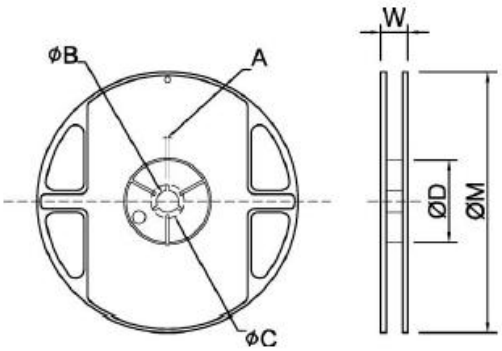

TYPE	SIZE		A	ϕ B	ϕ C	ϕ D	W	ϕ M
3216	7"	5K/Reel	2.0±0.5	13.5±1.0	21±1.0	60±1.0	11.5±2.0	178±2.0

Tapping Specification

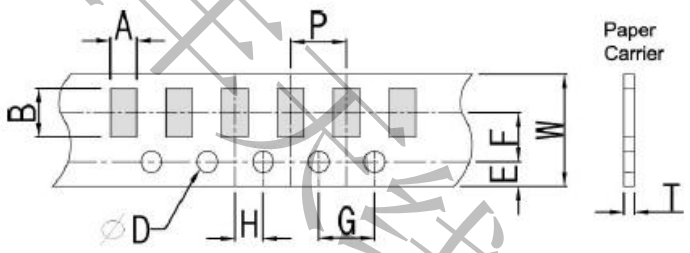

Packaging	Type	A	B	W	E	F	G	H	T	ϕD	P
Paper Type	3216	1.90±0.20	3.50±0.20	8.0±0.20	1.75±0.10	3.5±0.05	4.0±0.10	2.0±0.05	0.75±0.10	$1.50^{+0.10}_{-0}$	4.0±0.1

宜丰天线技术

Board Flex (SMD)	1. Mounting method: IR-Reflow. PCB Size (L:100 × W:40 × T:1.6mm) 2. Apply the load in direction of the arrow until bending reaches 2 mm. 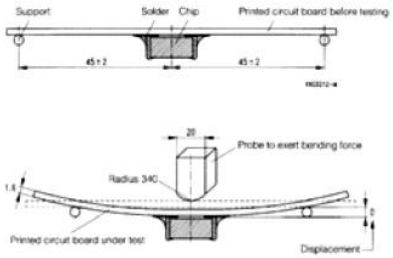	No Visible Damage.	AEC-Q200 005
Adhesion	Force of 1.8Kg for 60 seconds. 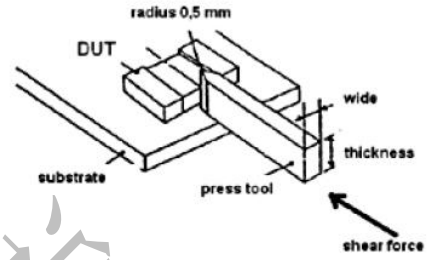	No Visible Damage Magnification of 20X or greater may be employed for inspection of the mechanical integrity of the device body terminals and body/terminal junction.	AEC-Q200 006
Physical Dimension	Any applicable method using x10 magnification, micrometers, calipers, gauges, contour projectors, or other measuring equipment, capable of determining the actual specimen dimensions.	In accordance with specification.	JESD22 JB100

迎丰天线技术

Reliability Table

Test Item	Procedure	Requirements Ceramic Type	Remark (Reference)
Electrical Characterization		Fulfill the electrical specification	User Spec.
Thermal Shock	1. Preconditioning: 50 ± 10℃ / 1 hr , then keep for 24 ± 1 hrs at room temp. 2. Initial measure: Spec: refer Initial spec. 3. Rapid change of temperature test: -30℃ to +85℃; 100 cycles; 15 minutes at Lower category temperature; 15 minutes at Upper category temperature.	No Visible Damage. Fulfill the electrical specification.	MIL-STD-202 107
Temperature Cycling	1. Initial measure: Spec: refer Initial spec. 2. 100 Cycles (-30℃ to +85℃), Soak Mode=1 (2 Cycle/hours). 3. Measurement at 24 ± 2Hours after test condition.	No Visible Damage. Fulfill the electrical specification.	JESD22 JA104
High Temperature Exposure	1. Initial measure: Spec: refer Initial spec. 2. Unpowered; 500hours @ T=+85℃. 3. Measurement at 24 ± 2 hours after test.	No Visible Damage. Fulfill the electrical specification.	MIL-STD-202 108
Low Temperature Storage	1. Initial measure: Spec: refer Initial spec. 2. Unpowered; 500hours @ T= -30℃. 3. Measurement at 24 ± 2 hours after test.	No Visible Damage. Fulfill the electrical specification.	MIL-STD-202 108
Solderability (SMD Bottom Side)	Dipping method: a. Temperature: 235 ± 5°C b. Dipping time: 3 ± 0.5s	The solder should cover over 95% of the critical area of bottom side.	IEC 60384-21/22 4.10
Soldering Heat Resistance (RSH)	Preheating temperature: 150 ± 10°C. Preheating time: 1~2 min. Solder temperature: 260 ± 5°C. Dipping time: 5 ± 0.5s	No Visible Damage.	IEC 60384-21/22 4.10

深圳迎丰天线技术