PHILIPS

Headphones
TAH1120

User manual

Register your product and get support at
www.philips.com/support

Contents

1 Important safety instructions 2
Hearing safety 2
General information 2

2 Your owireless over-ear headphones 3
What is in the box 3
Other devices 3
Overview of your wireless over-ear headphones 4

3 Get started 5
Charge the battery 5
Pair the headphones with your Bluetooth device for the first time 5
Pair the headphones with another Bluetooth device 6
6

4 Use your headphones 7
Connect the headphones to your Bluetooth device 7
Power on/off 7
Manage your calls and music 7
Voice assistant 8
Headphones LED indicator status 8

5 Reset the headphones 9

6 Technical data 9

7 Notice 10
Declaration of conformity 10
Dispose of your old product and battery 10
Remove the integrated battery 10
Compliance with EMF 11
Environmental information 11
Notice of compliance 11

8 Trademarks 13

9 Frequently asked questions 14

1 Important Safety Instructions

Hearing Safety

Danger

- To avoid hearing damage, limit the time you use headphones at high volume and set the volume to a safe level. The louder the volume, the shorter the safe listening time is.

Be sure to observe the following guidelines when using your headphones.

- Listen at reasonable volumes for reasonable periods of time.
- Be careful not to adjust the volume continuously upwards as your hearing adapts.
- Do not turn up the volume so high that you can't hear what's around you.
- You should use caution or temporarily discontinue use in potentially hazardous situations.
- Excessive sound pressure from earpieces and headphones can cause hearing loss.
- Using headphones with both ears covered while driving is not recommended and may be illegal in some areas.
- For your safety, avoid distractions from music or phone calls while in traffic or other potentially dangerous environments.

General information

To avoid damage or malfunction:

CAUTION

- Do not expose headphones to excessive heat.
- Do not drop your headphones.
- Headphones shall not be exposed to dripping or splashing. (Refer to the IP rating of specific product.)
- Do not allow your headphones to be submerged in water.
- Do not charge your headphones when the connector or socket is wet.
- Do not use any cleaning agents containing alcohol, ammonia, benzene or abrasives.
- If cleaning is required, use a soft cloth, if necessary dampened with a minimum amount of water or diluted mild soap, to clean the product.
- The integrated battery shall not be exposed to excessive heat such as sunshine, fire or the like.
- Danger of explosion if batteries are incorrectly replaced. Replace only with the same or equivalent type.
- To achieve the specific IP rating, the charging slot cover must be closed.
- Disposal of a battery into fire or a hot oven, or mechanically crushing or cutting a battery, can result in an explosion.
- Leaving a battery in an extremely high temperature surrounding environment that can result in an explosion or the leakage of flammable liquid or gas.
- A battery subjected to extremely low air pressure that may result in an explosion or the leakage of flammable liquid or gas.
- To avoid risk of fire, the equipment is supplied only by external power source which output shall comply with PS1 (with output capacity less than 15W).

Operating and storage temperatures and humidity

- Store in a place where the temperature is between -20°C (-4°F) and 50°C (122 °F) with up to 90% relative humidity.
- Operate in a place where the temperature is between 0°C (32°F) and 45°C (113 °F) with up to 90% relative humidity.
- Battery life may be shorter in high or low temperature conditions.
- Replacement of a battery with an incorrect type risks severely damaging the earpieces and the battery (for example, in the case of some lithium battery types).

2 Your wireless over-ear headphones

Congratulations on your purchase, and welcome to Philips! To fully benefit from the support that Philips offers, register your product at www.philips.com/support. With these Philips Wireless over-ear headphones you can:

- Enjoy convenient wireless handsfree calls
- Enjoy and control music wirelessly
- Switch between calls and music

What is in the box

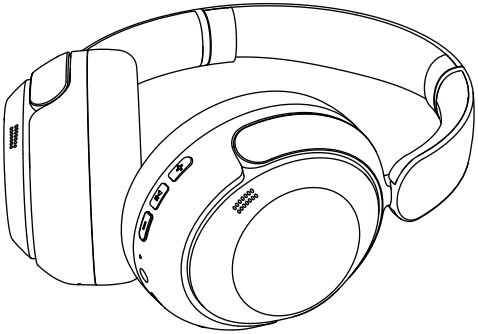

Philips Wireless over-ear headphones
Philips TAH1120

Type-C charging cable

Quick Start Guide

Warranty

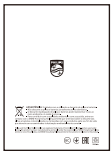

Safety Leaflet

Other devices

A mobile phone or device (e.g. notebook, tablet, Bluetooth adapters, MP3 players etc) which supports Bluetooth and is compatible with the earpieces.

Overview of your wireless over-ear headphones

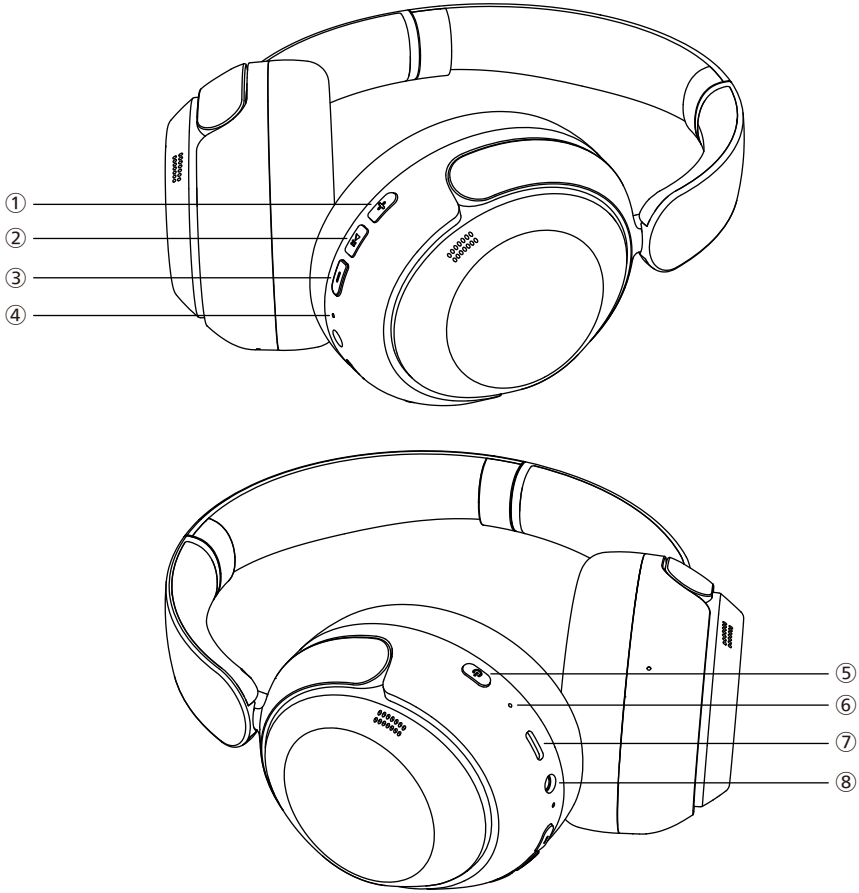

① Volume +
② Multifunction Button
③ Volume -
④ Microphone Hole
⑤ Power
⑥ LED Indicator
⑦ USB Charging Port
⑧ 3.5mm AUX Jack

3 Get started

Charge the battery

Note

- Before you use your headphones, place them in the charging case and charge the battery for 2 hours for optimum battery capacity and lifetime.
- Use only the original USB-C charging cable to avoid any damage.
- Finish your call before charging. Connect the headphones to the charger, the headphones will turn off automatically.
- If the headphones are not used for a long time, the rechargeable battery will begin to lose its charge. To avoid this loss, please fully charge the battery at least once every three months.

Please connect the provided USB-C charging cable to:

» USB-C charging slot on headphones

» USB interface for charger/computer

When charging the headphones, the LED will light up as a white light, and once the headphones are fully charged, the white light will turn off

Pair the headphones with your Bluetooth device for the first time

1 Make sure that the headphones are fully charged and turned off.

2 Press and hold the power button for 2 seconds to turn on the device

» The LED indicator light on the headphones flashes alternately in white and blue after the white indicator light stays on for 2 seconds

» The headphones are now in pairing mode and are ready to pair with a Bluetooth device (e.g. a mobile phone)

3 Turn on the Bluetooth function of your Bluetooth device.

4 Pair the headphones with your Bluetooth device, refer to the user manual of your Bluetooth device.

Note

- After powering on, if the headphones can't find any previously connected Bluetooth device, put them into pairing mode (if the last connected device is unavailable, the headphones will enter pairing mode one minute later).

The following example shows you how to pair the headphones with your Bluetooth device.

1 Turn on the Bluetooth function of your Bluetooth device, select **Philips TAH1120.**

2 Enter the headphones' password"**0000**" (4 zeros) if prompted. For those devices featuring Bluetooth 3.0 or higher, there is no need to enter a password.

Philips TAH1120

4 Use your headphones

Connect the headphones to your Bluetooth device

1 Turn on the Bluetooth function of your Bluetooth device.

2 Press and hold the on/off button to turn on the headphones

» The white LED will turn on within 2 seconds

» The headphones automatically reconnect to the previous phone/ Bluetooth device

Tips

- If you first turn on the headphones and then turn on the Bluetooth function of the Bluetooth device, you must go to the Bluetooth menu of the device and manually connect the earphones to the Bluetooth device.

Note

- If you first turn on the headphones and then turn on the Bluetooth function of the Bluetooth device, you must go to the Bluetooth menu of the device and manually connect the headphones to the Bluetooth device.

Wired connection

You can also use the headphones together with the provided audio cable, and connect the provided audio cable to the headphones and external audio equipment.

Note

- When the 3.5mm audio cable is inserted into the headset port, the headset will power off automatically.
- When the 3.5mm audio cable is connected between your phone and the TAH1120 headset, the headset cannot be used for phone call audio input.
- It is not recommended to use the headset via the 3.5mm audio cable while charging.

Power on/off

Task	Button	Action
Turn on the headphones	MFB	Press and hold for 2 seconds
Turn the headphones off	MFB	Long press for 4 seconds

Manage your calls and music

Music control

Task	Button	Action
Play or pause music	MFB	Double tap
Next track	Volume +	Long press
Previous track	Volume -	Long press
Adjust volume +	Volume +	Single click
Adjust volume -	Volume -	Single click

Call control

Task	Button	Action
Pick up a call	MFB	Single click
Hang up call	MFB	Press and hold for 1 second
Reject a call	MFB	Press and hold for 1 second

Voice assistant

Task	Button	Action
Trigger voice assistant (Siri/Google)	MFB	Press and hold for 2 seconds
Stop Voice Assistant	MFB	Single click

Headphones LED indicator status

Headphones status	Indicator
The headphones are connected to Bluetooth	The indicator light is off
The headphones areready for pairing	The blue and white LED indicator lights flash alternately
The headphones are on but not connected to a Bluetooth device	The blue and white LED indicator lights flash alternately (automatically turn off after 5 minutes)
Low battery level	The white LED indicator light flashes 1 times every 5 seconds
Battery is fully charged	Refer to case LED

5 Reset the headphones

If you encounter any pairing or connection issue, you can follow the following procedure to reset your headphones to factory default settings.

1 On your Bluetooth device, go to the Bluetooth menu and remove **Philips TAH1120** from the device list.

2
your Bluetooth device.

3 Ensure that the headphones are not connected to a Bluetooth device

4 Press and hold the volume up and volume down buttons on the headphones simultaneously for 4 seconds to clear all information

5 Follow steps in "Use your headphones - connect the headphones to your Bluetooth device."

6 Pair the headphones with your Bluetooth device, select **Philips TAH8040**.

6 Technical data

- Music time: 48hours
- Charging time: 2 hours
- Rechargeable lithium-ion battery 300mAh
- Bluetooth version: 6.0
- Compatible Bluetooth profiles:
  - HFP (Hands-free profile)
  - A2DP (Advanced audio distribution profile)
  - AVRCP (Audio Video Remote Control Profile)
- Supported audio codec: SBC
- Frequency range: 2.402-2.480GHz
- Transmitter power: < 10 dBm
- Operating range: up to 10 meters (33 feet)
- Auto power off
- USB-C port for charging
- Low battery warning:Voice broadcast prompt

Note

- Specifications are subject to change without notice.

7 Notice

Declaration of conformity

Hereby, MMD Hong Kong Holding Limited declares that the product is in compliance with the essential requirements and other relevant provisions of RED Directive 2014/53/EU and UK Radio Equipment Regulations SI 2017 No 1206. You can find the Declaration of Conformity on www.philips.com/support.

Dispose of your old product and battery

Your product is designed and manufactured with high quality materials and components, which can be recycled and reused.

This symbol on a product means that the product is covered by European Directive 2012/19/EU.

This symbol means that the product contains a built-in rechargeable battery covered by European Directive 2013/56/EU which cannot be disposed of with normal household waste. We strongly advise you to take your product to an official collection point or a Philips service centre to have a professional remove the rechargeable battery. Inform yourself about the local separate collection system for electrical and electronic products and rechargeable batteries. Follow local rules and never dispose of the product and rechargeable batteries with normal household waste. Correct disposal of old products and rechargeable batteries helps prevent negative consequences for the environment and human health.

Remove the integrated battery

If there is no collection/recycling system for electronic products in your country, you can protect the environment by removing and recycling the battery before disposing of the earpieces.

- Before removing the battery, make sure the earphones are turned off and disconnected from charging.

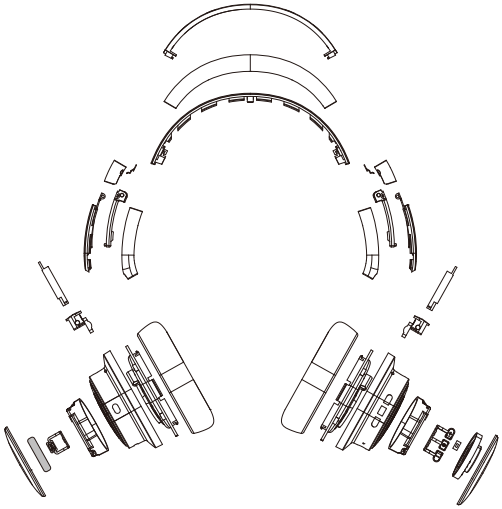

Compliance with EMF

This product complies with all applicable standards and regulations regarding exposure to electromagnetic fields.

Environmental information

All unnecessary packaging has been omitted. We have tried to make the packaging easy to separate into three materials: cardboard (box), polystyrene foam (buffer) and polyethylene (bags and protective foam sheet).
Your system consists of materials which can be recycled and reused if disassembled by a specialized company. Please observe the local regulations regarding disposal of packaging materials, exhausted batteries and old equipment.

Notice of compliance

The device complies with the FCC rules, Part 15. Operation is subject to the following two conditions:

1. **This device may not cause harmful interference.**
2. **This device must accept any interference received, including interference that may cause undesired operation.**

FCC rules

This equipment has been tested and found to comply with the limits for a Class B digital device, pursuant to Part 15 of the FCC Rules. These limits are designed to provide reasonable protection against harmful interference in a residential installation. This equipment generates, uses and can radiate radio frequency energy and, if not installed and used in accordance with the instruction manual, may cause harmful interference to radio communications.
However, there is no guarantee that interference will not occur in a particular installation. If this equipment does cause harmful interference to radio or television reception, which can be determined by turning the equipment off and on, the user is encouraged to try to correct the interference by one or more of the following measures:

- Reorient or relocate the receiving antenna
- Increase the separation between equipment and receiver
- Connect the equipment into an outlet on a circuit different from that to which the receiver is connected.
- Consult the dealer or an experienced radio/TV technician for help.

FCC Radiation Exposure Statement:

This equipment complies with FCC radiation exposure limits set forth for an uncontrolled environment.
This transmitter must not be co-located or operated in conjunction with any other antenna or transmitter.

CAUTION: Changes or modifications to this unit not expressly approved by the party responsible for compliance could void the user's authority to operate the equipment.

Canada:
This device contains license-exempt transmitter(s) / receiver(s) that comply with Innovation, Science and Economic Development Canada's license-exempt RSS(s). Operation is subject to the following two conditions: (1) This device may not cause harmful interference. (2) This device must accept any interference received, including interference that may cause undesired operation of the device.

IC Radiation Exposure Statement:

This equipment complies with Canada radiation exposure limits set forth for uncontrolled environments.
This transmitter must not be co-located or operated in conjunction with any other antenna or transmitter.
CAN ICES-003(B)/NMB-003(B)

8 Trademarks

Bluetooth®

The Bluetooth® word mark and logos are registered trademarks owned by Bluetooth SIG, Inc. and any use of such marks by MMD Hong Kong Holding Limited is under license. Other trademarks and trade names are those of their respective owners.

Siri

Siri is a trademark of Apple Inc., registered in the U.S. and other countries.

Google

Google and Google Play are trademarks of Google LLC.

9 Frequently asked questions

My Bluetooth earpieces do not turn on.

The battery level is low. Charge the earpieces.

I cannot pair my Bluetooth earpieces with my Bluetooth device.

Bluetooth is disabled. Enable the Bluetooth feature on your Bluetooth device and turn on the Bluetooth device before you turn on the earpieces.

Pairing does not work.

- Put both earpieces into charging case.
- Make sure you have disabled the Bluetooth function of any previously connected Bluetooth devices.
- On your Bluetooth device, delete “Philips TAH1120” from the Bluetooth list.
- Pair your earpieces (see ‘Pair the earpieces with your Bluetooth device for the first time’ on page 6).

The Bluetooth device cannot find the earpieces.

- The earpieces may be connected to a previously paired device. Turn off the connected device or move it out of range.
- Pairing may have been reset or the earpieces have been previously paired with another device. Pair the earpieces with the Bluetooth device again as described in the user manual. (see ‘Pair the earpieces with your Bluetooth device for the first time’ on page 6).

My Bluetooth earpieces are connected to a Bluetooth stereo enabled mobile phone, but music only plays on the mobile phone speaker.

Refer to the user manual of your mobile phone. Select to listen to music through the earpieces.

The audio quality is poor and crackling noise can be heard.

- The Bluetooth device is out of range. Reduce the distance between your headset and Bluetooth device, or remove obstacles between them.
- Charge your headset.

The audio quality is poor when streaming from a mobile phone is very slow or streaming does not work at all.

Make sure your mobile phone not only supports (mono) HFP but also supports A2DP and is BT4.0x (or higher) compatible (see ‘Technical data’ on page 9).

2025 © MMD Hong Kong Holding Limited. All rights reserved. Specifications are subject to change without notice. Philips and the Philips Shield Emblem are registered trademarks of Koninklijke Philips N.V. and are used under license. This product has been manufactured by and is sold under the responsibility of MMD Hong Kong Holding Limited or one of its affiliates, and MMD Hong Kong Holding Limited is the warrantor in relation to this product. All other company and product names may be trademarks of its respective companies with which they are associated.

UM_TAH1120_70_EN_V1.0