125 kHz
RFID System

BLUEBOX PANEL READER LF (Ø22)

Preface

Kronotech S.r.l. (Kronotech) reserves the right to make changes to its products or services or to discontinue any product or service at any time without notice. Kronotech provides customer assistance in various technical areas, but does not have full access to data concerning the use and applications of customer's products. Therefore, Kronotech assumes no liability and is not responsible for customer applications or product or software design or performance relating to systems or applications incorporating Kronotech products. In addition, Kronotech assumes no liability and is not responsible for infringement of patents and/or any other intellectual or industrial property rights of third parties, which may result from assistance provided by Kronotech. Kronotech products are not designed, intended, authorized or warranted to be suitable for life support applications or any other life critical applications that could involve potential risk of death, personal injury or severe property or environmental damage. With the edition of this document, all previous editions become void. Indications made in this manual may be changed without previous notice. Composition of the information in this manual has been done to the best of our knowledge. Kronotech does not guarantee the correctness and completeness of the details given in this manual and may not be held liable for damages ensuing from incorrect or incomplete information. Since, despite all our efforts, errors may not be completely avoided, we are always grateful for your useful tips. The installation instructions given in this manual are based on advantageous boundary conditions. Kronotech does not give any guarantee promise for perfect function in cross environments. The companies or products mentioned in this document might be brands or brand names of the different suppliers or their subsidaries in any country. This document may be downloaded onto a computer, stored and duplicated as necessary to support the use of the related Kronotech products. Any other type of duplication, circulation or storage on data carriers in any manner not authorized by Kronotech represents a violation of the applicable copyright laws and shall be prosecuted.

Safety Instructions / Warning - Read before start-up!

- The device may only be used for the intended purpose designed by the manufacturer. The operation manual should be conveniently kept available at all times for each user.

- Unauthorized changes and the use of spare parts and additional devices that have not been sold or recommended by the manufacturer may cause fire, electric shocks or injuries. Such unauthorized measures shall exclude any liability by the manufacturer.

- The liability-prescriptions of the manufacturer in the issue valid at the time of purchase are valid for the device. The manufacturer shall not be held legally responsible for inaccuracies, errors, or omissions in the manual or automatically set parameters for a device or for an incorrect application of a device.
- Repairs may be executed by the manufacturer only.
- Only qualified personnel should carry out installation, operation, and maintenance procedures.
- Use of the device and its installation must be in accordance with national legal requirements and local electrical codes.
- When working on devices the valid safety regulations must be observed.

This manual applies to the following devices:

Description:

Read / write 125 kHz RFID device with integrated antenna. USB communication interface.

Order Number:

3223L

and (from) hardware and firmware versions:

Order no.	Main Carrier Board		RF Front End Board	
	Hardware Version	Firmware Version	Hardware Version	Firmware Version
3223L	2	2.01	4	4.11d

Items with main carrier hardware version 1 and firmware version 1.xx are obsolete items and no long available! Items with main carrier hardware version 2 and firmware version 2.xx fully replaces the old ones!

Items with RF front end hardware version 3 and firmware version 3.xx are obsolete items and no long available! Items with RF front end hardware version 4 and firmware version 4.xx fully replaces the old ones!

Main carrier with hardware version 1 and firmware version 1.xx could be upgraded only with firmware version 1.xx!

Main carrier with hardware version 2 and firmware version 2.xx could be upgraded only with firmware version 2.xx!

RF front end with hardware version 3 and firmware version 3.xx could be upgraded only with firmware version 3.xx!

RF front end with hardware version 4 and firmware version 4.xx could be upgraded only with firmware version 4.xx!

Table of Contents

1 Introduction 7
2 Technical Specifications 8
2.1 Electrical Features 8
2.2 Mechanical Features 8
2.3 Environmental Conditions 8
3 Operating Features 9
3.1 General Parameters 10
3.2 Configuration Parameters 12
3.2.1 USB HID Keyboard Emulation 13
3.2.2 'Spontaneous' Message 14
4 Installation 19
4.1 General Instructions 19
4.2 Notes on Tag Mounting 19
4.3 Avoiding Interference 19
4.4 Mechanical Design 20
4.5 Fixing 20
4.6 Mounting Distances 21
4.7 Positioning of the Tags 21
5 Hardware Settings 22
5.1 Main Carrier Board 22
6 Electrical Connections 23
7 Status Indications: 24
8 Antenna 26
9 Maintenance, Repair and Disposal 27
10 Mechanical Drawings 28
11 Document Revision History 29
A. .inf File 30
B. Driver Install on Windows 8 OS 32

Page intentionally left blank

1 Introduction

The **PANEL READER RFID LF (Ø22)** hereinafter named **BLUEBOX** is a read/write 125 kHz RFID device that communicates with a 'host' system (typically a PC) through an USB interface. The **BLUEBOX** acts as a joint through a set of commands between the host system and a RFID tag (or transponder) present near the antenna. A software driver (appendix A) must be installed at the 'host' (PC) level to allow the USB connection of the **BLUEBOX** to appear as a serial port (COM). It is also possible to configure the **BLUEBOX** to send a message as an HID Keyboard with Italian layout (keyboard emulation).

Hereinafter the list of the supported O.S.

- Windows XP SP3 32/64 bit
- Windows Vista 32/64 bit
- Windows 7 32/64 bit
- Windows 8/8.1 32/64 bit
- Windows 10 32/64 bit

From a mechanical point of view, the **BLUEBOX** consists of four main components as shown below:

- the antenna placed in the front element of the device with a diameter of Ø28 visible on the panel,
- the M22 ring nut for fixing the device on rear of the panel,
- the fixing support of the device, which is placed between the back of the panel and the fixing ring of the device itself,
- the device that connects to the antenna with strip coupling and is fixed to the support by means of 2 M3x6 screws.

2 Technical Specifications

This section provides details on the technical specifications of the **BLUEBOX**.

2.1 Electrical Features

This section provides details on the electrical features of the **BLUEBOX**.

Power Supply	5Vdc, USB Bus powered
Power Ratings	2.5W
Operating Frequency	125 kHz ± 2 kHz
Antenna	Integrated
Supported Transponders	125 kHz Read Only and Read/Write transponders (e.g. Unique and Q5 by Sokymat, HITAG S and HITAG 1 by NXP, 555x by Temic, EM4x50 (TITAN), EM4305, EM410x, …)
Communication Interface	USB Virtual COM, USB HID Keyboard
Status Display	4 LEDs
Connections	USB Full-Speed 12Mbit/s

2.2 Mechanical Features

This section provides details on the mechanical features of the **BLUEBOX**.

Dimensions	Front: Ø28mm x 9mm Rear: 41 x 34.5 x 30.7 mm Panel thickness: 2.5 to 4 mm

2.3 Environmental Conditions

This section provides details on the environmental conditions of the **BLUEBOX**.

Operating Temperature	-20°C … +65°C
Storage Temperature	-40°C … +85°C
Humidity	Up to 95%, non condensing

3 Operating Features

In 'continuous' mode the **BLUEBOX** is characterized by the coexistence of 2 'parallel' and asynchronous activities: the transponder identification and the communication with the 'host' system. The 'continuous' identification activity interacts with the communication activity through a buffer that contains the code of the last identified transponder or the 0 code that indicates the absence of a transponder. Due to synchronization and filtering reasons, the buffer is handled by a parameter defined as 'hold time' (to be set in the range of 0 … 99 seconds, default value 1 second) and allows to extend 'artificially' the presence of the transponder after it leaves the antenna's influence area; this behavior is observable looking at the 'ANT' LED status that is 'on' indicating the presence of a transponder. Through the command 'data request' it is possible to get the data contained in the buffer.

The **BLUEBOX** handles also a 31 elements FIFO queue which is combined with a 'filter time' parameter (to be set in a range of 0 … 99 seconds, default value 1 second) that prevents the queue saturation in case of a transponder 'continuous' presence. When a transponder is identified, the **BLUEBOX** compares it to the previous read transponder. If the transponder is different (it is defined as 'new'), its code will be inserted in the queue and the filter time will be started. Otherwise (the transponder is the same of the previous read one), the **BLUEBOX** verifies if the filter time is expired. In this case (the filter time is expired), the transponder is defined as 'new' and will be processed as described above, otherwise only the filter time will be rearmed. Through the command 'queue data request' and the relative 'ack', it is possible to get the data contained in the queue and unload it.

In 'continuous' mode the **BLUEBOX** can be configured to obtain the behavior of a 'spontaneous' reader that will send a message on the USB Virtual COM line. This feature is enabled (on) / disabled (off) by the solder jumper W2 or using a flag in the general configuration of the reader. It can be also configured to obtain the behavior of an HID Keyboard that will send a message as keyboard emulation. This feature is enabled (on) / disabled (off) by the solder jumper W3 or using a flag in the general configuration of the reader.

- If configured and available an host can receive the 'spontaneous' message through the USB Virtual COM line. The 'spontaneous' message is sent only once and no ACK/NAK reply message is implemented, see the protocol manual for details.

- If configured and available an host can receive the 'spontaneous' message through the USB HID Keyboard line. The 'spontaneous' message is sent only once.

In case of a 'spontaneous' message send error, due to a connection or communication error, no further attempts will be made and the tag will be discarded!

BLUEBOX will hold onto a maximum of 20 tags when configured to use the 'spontaneous' message. Once the 20 tag limit is reached, the new tags will be discarded!

The **BLUEBOX** allows the execution of 'on request' functions. During the execution of these functions, the 'continuous' identification activity will be suspended temporarily; the involved commands are relative to device configuration and tag read/write specific activities.

If not required, the 'continuous' identification activity can be disabled through a flag defined in the general parameters. In this case, the **BLUEBOX** will only execute the 'on request' commands already defined above.

3.1 General Parameters

This section provides details on the configurable general parameters of the **BLUEBOX**.

Parameter	Description	Range	Default
Device Address	Device address of the reader.	000 … 255	255
Baud Rate	Baud rate on USB Virtual COM interface.	1200 2400 4800 9600 19200 38400 57600 115200	19200
Data Bits	Data bits on USB Virtual COM interface.	7 8	8
Stop Bits	Stop bits on USB Virtual COM interface.	1 2	1
Parity	Parity on USB Virtual COM interface.	None	None

Parameter	Description	Range	Default
		Even Odd	
Nibble Coding	Nibble coding.	Normal Reverse	Normal
Hold Time	Reading management hold time.	0 … 99 seconds	1 sec
Filter Time	Tag queue management filter time.	0 … 99 seconds 0 … 99 minutes	1 sec
'Spontaneous' Mode	Spontaneous mode activation.	Disabled Enabled	Disabled
'Continuous' Mode	'Continuous mode' activation.	Disabled Enabled	Enabled

The general parameters are managed through the 'Read General Parameters' and 'Write General Parameters' commands as described in protocol technical manuals where the parameters 1…7 fields and default values are:

1	2	3	4	5	6	7
Device Address	Serial1	Serial2	Hold Time	Standard	Filter Time	Functional Flags
0xFF	**0x48**	**0x10**	**0x01**	**0x00**	**0x01**	**0x00**

Where:

Parameter	Description
Device Address	Device address of the reader (0x00 … 0xFF).
Serial1	USB Virtual COM communication settings. • High nibble: baud rate: ○ 0x0: 1200 bps ○ 0x1: 2400 bps ○ 0x2: 4800 bps ○ 0x3: 9600 bps ○ 0x4: 19200 bps ○ 0x5: 38400 bps ○ 0x6: 57600 bps ○ 0x7: 115200 bps • Low nibble: data bits:

<table>
<tr><th>Parameter</th><th>Description</th></tr>
<tr><td></td><td>○ 0x7: 7 bits
○ 0x8: 8 bits</td></tr>
<tr><td>Serial2</td><td>USB Virtual COM communication settings.
• High nibble: stop bits:
○ 0x1: 1 bits
○ 0x2: 2 bits
• Low nibble: parity:
○ 0x0: None
○ 0x1: Even
○ 0x2: Odd</td></tr>
<tr><td>Hold Time</td><td>Reading management hold time:
• Decimal 0 … 99 for time in seconds (0 … 99 seconds)</td></tr>
<tr><td>Standard</td><td>Tag identification standard:
• High nibble: nibble coding:
○ 0x0: Normal
○ 0x1: Reverse
• Low nibble: 0x0</td></tr>
<tr><td>Filter Time</td><td>Reading management filter time:
• Decimal 0 … 99 for time in seconds (0 … 99 seconds)
• Decimal 100 … 199 for time in minutes (0 … 99 minutes)</td></tr>
<tr><td>Functional Flags</td><td>Flags. Single bits are dedicated to disable (0 value) or enable (1 value) functions:
<table>
<tr><th>Bit</th><th>Description</th></tr>
<tr><td>Bit 7</td><td>Not used</td></tr>
<tr><td>Bit 6</td><td>Not used</td></tr>
<tr><td>Bit 5</td><td>Not used</td></tr>
<tr><td>Bit 4</td><td>Not used</td></tr>
<tr><td>Bit 3</td><td>‘Spontaneous’ mode</td></tr>
<tr><td>Bit 2</td><td>Not used</td></tr>
<tr><td>Bit 1</td><td>Not used</td></tr>
<tr><td>Bit 0</td><td>‘Continuous’ mode (0=enabled, 1=disabled).</td></tr>
</table></td></tr>
</table>

3.2 Configuration Parameters

This section provides details on the configurable operational parameters of the **BLUEBOX**.

3.2.1 USB HID Keyboard Emulation

This section provides details on the configurable USB HID keyboard emulation parameters of the **BLUEBOX**

Parameter	Description	Range	Default
Intrachar Time	The time between chars. Note that this parameter become effective only after a reboot of the reader.	0 … 990 ms in 10 ms step	20 ms
End of Message	The end character added to the message. Note that this parameter become effective only after a reboot of the reader.	NUL CR TAB	NUL
Start of Text	The start text character added to the message. Note that this parameter become effective only after a reboot of the reader.	See description	NUL
End of Text	The end text character added to the message. Note that this parameter become effective only after a reboot of the reader.	See description	NUL
Content Data Encoding	The message content data encoding. Note that this setting is not effective if the spontaneous message content data encoding setting and/or manipulation settings are different from the default values. Note that this parameter become effective only after a reboot of the reader.	None Kronotech K20 Decimal D10	None
Message Index	The start position index in the message to remove leading characters from the message (0 means no leading characters remove) Note that this parameter become effective only after a reboot of the reader.	0 … 255	0
Max Message Length	The max length of the message (0 means all the message starting from the index to the end of message). Note that this parameter become effective only after a reboot of the reader.	0 … 255	0

The keyboard emulation parameters are stored in configuration page nr. 0x06 and are managed through the 'Read RAM/ROM Configuration Parameters' and 'Write RAM/ROM Configuration Parameters' commands as described in protocol technical manuals where the parameters 1…7 fields and default values are:

1	2	3	4	5	6	7
Intrachar Time	End of Message	Content Data Encoding	Start of Text	End of Text	Message Index	Max Message Length
0x02	0x00	0x00	0x00	0x00	0x00	0x00

Where:

Parameter	Description
Intrachar Time	Time between chars in the range 0 (0x00) … 990 (0x63) ms with 10 ms steps.
End of Message	The end of message character added to the message: • 0x00: NUL (no end character); • 0x09: TAB (tabulation); • 0x0D: CR (carriage return).
Content Data Encoding	The message content data encoding: • 0x00: None (no message content data encoding); • 0x01: Kronotech K20 (Kronotech K20 conversion of the UID of the identified tag. The UID must be a 5-bytes length UID); • 0x02: Decimal D-10 (decimal conversion of the UID of the identified tag. The UID is trimmed right to 4 bytes and converted to 10 decimal digits 0 pad left);
Start of Text	The character added at the beginning of the message. It must be in the range 0x20...0x7D except values 0x27, 0x3C, 0x3E, 0x60. Value 0x00 means no Start of Text character.
End of Text	The character added at the end of the message (before End of Message). It must be in the range 0x20...0x7D except values 0x27, 0x3C, 0x3E, 0x60. Value 0x00 means no End of Text character.
Message Index	The start position index in the message to remove leading characters from the message except of Start of Text, End of Text and End of Message chars. Value 0 means no leading characters remove.
Max Message Length	The max length of the message except of Start of Text, End of Text and End of Message chars. Value 0 means all the message starting from Message Index to the end of message.

3.2.2 'Spontaneous' Message

This section provides details on the configurable 'spontaneous' message parameters of the **BLUEBOX**

Parameter	Description	Range	Default
Message on USB Virtual COM	'Spontaneous' message on USB Virtual COM interface activation/deactivation.	Disabled Enabled	Enabled

Parameter	Description	Range	Default
	Note that this parameter become effective only after a reboot of the reader.		
Message on USB HID Keyboard	'Spontaneous' message on USB HID Keyboard interface activation/deactivation. Note that this parameter become effective only after a reboot of the reader.	Disabled Enabled	Enabled
Format	The 'spontaneous' message format. • 0: Message is sent with BlueBox protocol rules; • 1: Message is sent, without any control character, in dual char string form; • 2: Message is sent like in option 1 but at the end CR will be appended; • 3: Message is sent like in option 1 but at the end CR+LF will be appended. • 4: Message is sent, without any control character, in ASCII form. Non printable chars (0x20..0x7E) are replaced with '.' (0x2E). • 5: Message is sent like in option 4 but at the end CR will be appended. • 6: Message is sent like in option 4 but at the end CR+LF will be appended. • 7: Message is sent like in option 1 with an STX char at the begin of the message. • 8: Message is sent like in option 2 with an STX char at the begin of the message. • 9: Message is sent like in option 3 with an STX char at the begin of the message. • 10: Message is sent like in option 4 with an STX char at the begin of the message. • 11: Message is sent like in option 5 with an STX char at the begin of the message. • 12: Message is sent like in option 6 with an STX char at the begin of the message. Note that this parameter become effective only after a reboot of the reader.	0 1 2 3 4 5 6 7 8 9 10 11 12	0
Content Data Encoding	The 'spontaneous' message content data encoding. Note that this setting different from default value overrides the USB HID keyboard emulation message content data encoding setting. Note that this parameter become effective only after a reboot of the reader.	None Decimal Kronotech K20 Decimal D-10	None
UID Only	UID only in spontaneous message content data. Note that this setting different from default	Disabled Enabled	Disabled

Parameter	Description	Range	Default
	value overrides the USB HID keyboard emulation message content data encoding setting. Note that this parameter become effective only after a reboot of the reader.		
Reverse Byte Order	Reverse byte order of the spontaneous message content data. Note that this setting different from default value overrides the USB HID keyboard emulation message content data encoding setting. Note that this parameter become effective only after a reboot of the reader.	Disabled Enabled	Disabled
Nibble Bit Reverse	Nibble bit reverse of the spontaneous message content data. Note that this setting different from default value overrides the USB HID keyboard emulation message content data encoding setting. Note that this parameter become effective only after a reboot of the reader.	Disabled Enabled	Disabled

The 'spontaneous' message parameters are stored in configuration page nr. 0x09 and are managed through the 'Read RAM/ROM Configuration Parameters' and 'Write RAM/ROM Configuration Parameters' commands as described in protocol technical manuals where the parameters 1…7 fields with default values are:

1	2	3	4	5	6	7
0x00	Interface	Packet Format	Content Data Encoding	Content Data Manipulation	0x00	0x00
0x00	**0x00**	**0x00**	**0x00**	**0x00**	**0x00**	**0x00**

Where:

Parameter	Description
Interface	The interface where to send the 'spontaneous' message activation/deactivation. Single bits are dedicated to enable (0 value) or disable (1 value) an interface: **Bit** — **Description** Bit 7 — Not used Bit 6 — Not used Bit 5 — Not Used

<table>
<tr><th>Parameter</th><th>Description</th></tr>
<tr><td></td><td>
<table>
<tr><td>Bit 4</td><td>Not Used</td></tr>
<tr><td>Bit 3</td><td>Not Used</td></tr>
<tr><td>Bit 2</td><td>USB HID keyboard</td></tr>
<tr><td>Bit 1</td><td>Not Used</td></tr>
<tr><td>Bit 0</td><td>USB Virtual COM</td></tr>
</table>
</td></tr>
<tr><td>Packet Format</td><td>The ‘spontaneous’ message packet format:

0x00: Message is sent with BlueBox protocol rules;
0x01: Message is sent, without any control character, in dual char string form;
0x02: Message is sent like in option 1 but at the end CR will be appended;
0x03: Message is sent like in option 1 but at the end CR+LF will be appended.
0x04: Message is sent, without any control character, in ASCII form. Non printable chars (0x20..0x7E) are replaced with ‘.’ (0x2E).
0x05: Message is sent like in option 4 but at the end CR will be appended.
0x06: Message is sent like in option 4 but at the end CR+LF will be appended.
0x07: Message is sent like in option 1 with an STX char at the begin of the message.
0x08: Message is sent like in option 2 with an STX char at the begin of the message.
0x09: Message is sent like in option 3 with an STX char at the begin of the message.
0x0A: Message is sent like in option 4 with an STX char at the begin of the message.
0x0B: Message is sent like in option 5 with an STX char at the begin of the message.
0x0C: Message is sent like in option 6 with an STX char at the begin of the message.
</td></tr>
<tr><td>Content Data Encoding</td><td>The ‘spontaneous’ message content data encoding:

0x00: None (no message content data encoding);
0x01: Decimal (decimal conversion of the UID of the identified tag);
0x02: Kronotech K20 (Kronotech K20 conversion of the UID of the identified tag. The UID must be a 5-bytes length UID)
0x03: Decimal D-10 (decimal conversion of the UID of the identified tag. The UID is trimmed right to 4 bytes and converted to 10 decimal digits 0 pad left);
</td></tr>
<tr><td>Content Data Manipulation</td><td>The ‘spontaneous’ message content data manipulation. Single bits are dedicated to enable (0 value) or disable (1 value) an option:
<table>
<tr><th>Bit</th><th>Description</th></tr>
<tr><td>Bit 7</td><td>Not used</td></tr>
<tr><td>Bit 6</td><td>Not used</td></tr>
<tr><td>Bit 5</td><td>Not Used</td></tr>
<tr><td>Bit 4</td><td>Not Used</td></tr>
<tr><td>Bit 3</td><td>Not Used</td></tr>
<tr><td>Bit 2</td><td>Nibble bit reverse</td></tr>
</table>
</td></tr>
</table>

Parameter	Description	
	Bit 1	Reverse byte order
	Bit 0	UID only

4 Installation

4.1 General Instructions

- Connect the device as defined in electrical connections section.
- Power the device as defined in electrical connections section. The boot sequence begins in either case when power is supplied to the device. This sequence typically completes within 5 seconds. After the boot sequence finishes, the device accepts commands, not before. The LED on the device alerts you to the status as defined in status indications section.
- Keep the device away from direct sunlight, high humidity, extreme temperatures, and sources of electromagnetic interference. Any combination of these conditions might degrade performance or shorten the life of the device.
- When mounting several nearby adhere to the minimum distances between them.
- Installing a device in or on metal reduces the read and write distance.

4.2 Notes on Tag Mounting

- For installation in and on metal tags provided for this purpose must be used.
- The tag must be placed in the reading area of the device antenna. The angle of aperture and the operating distance must be adhered to.
- The orientation of the device antenna axis must correspond with the axis of the tag for best performance.

4.3 Avoiding Interference

The device generates a modulated electrical field with a frequency of 125 kHz. To avoid interference of the data communication no other devices generating interference emission in this frequency band must be operated in its vicinity. Such devices are for example frequency converters and switched-mode power supplies.

Respect the notes on installation in the event that several RFID 125 kHz devices are operating simultaneously in the same area.

4.4 Mechanical Design

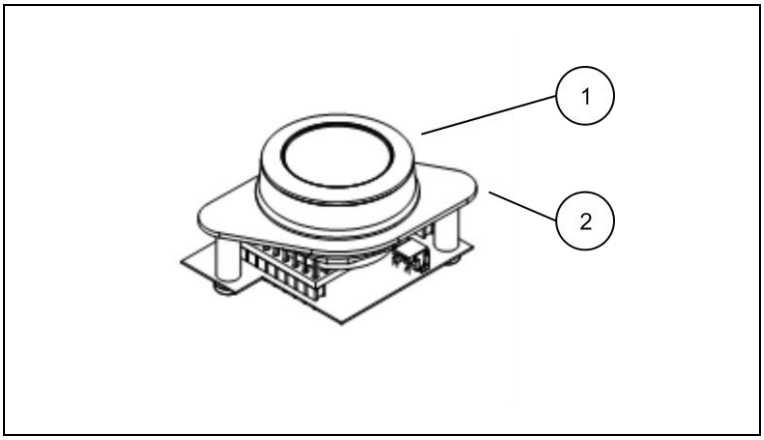

1. Sensing face (antenna)
2. Fixing bracket

4.5 Fixing

To correctly install the device, perform the following steps:

- Drill a Ø22 mm hole in the panel; remember that the panel must have a thickness between 2.5 and 4 mm, if shorter it is necessary to shim with appropriate washers placed between the panel itself and the fixing support of the device.
- Mount the antenna on the front of the panel by arranging the device fixing support and the ring on the back of the panel.
- Before tightening the ring nut, correctly align the fixing bracket of the device so as to match the antenna strip connection to the device.
- Fasten the device on the support using 2 M3x6 screws (supplied) after correctly and gently coupling with the antenna.
- Wire the device.

4.6 Mounting Distances

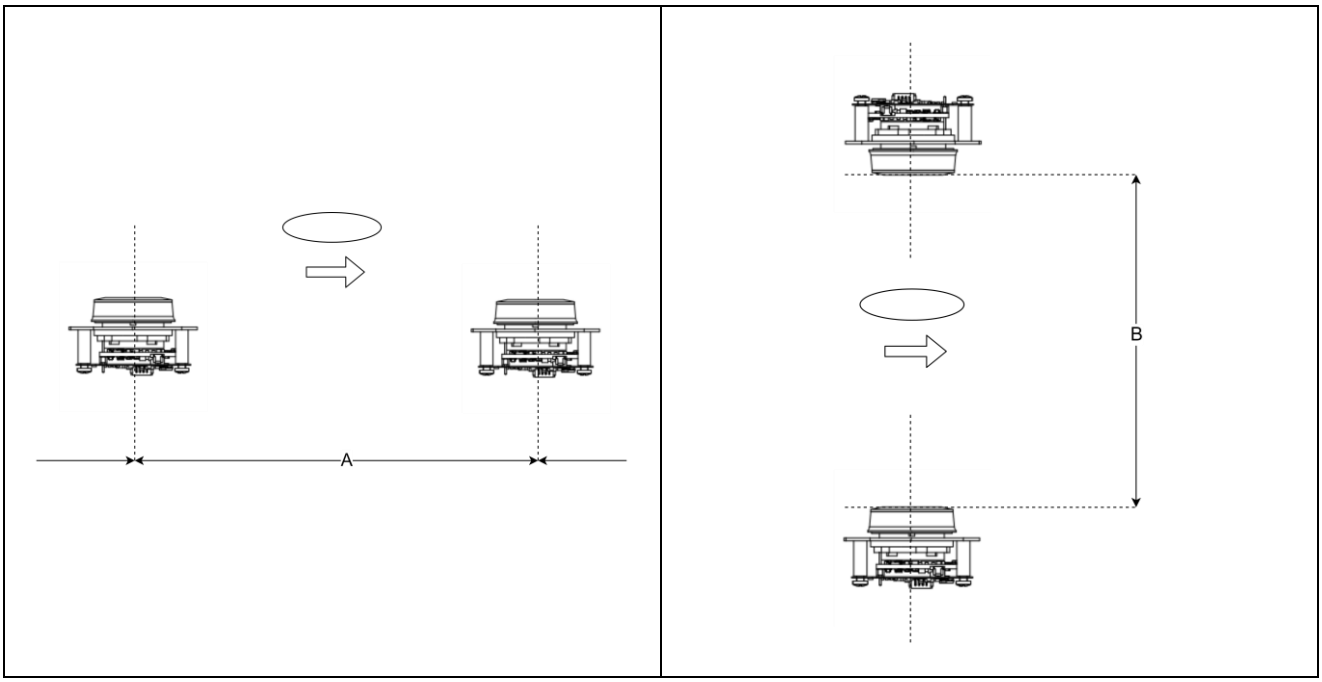

Operating Mode	Distance Side (A)	Distance Front (B)
Reading and writing	> 400mm	> 400mm

4.7 Positioning of the Tags

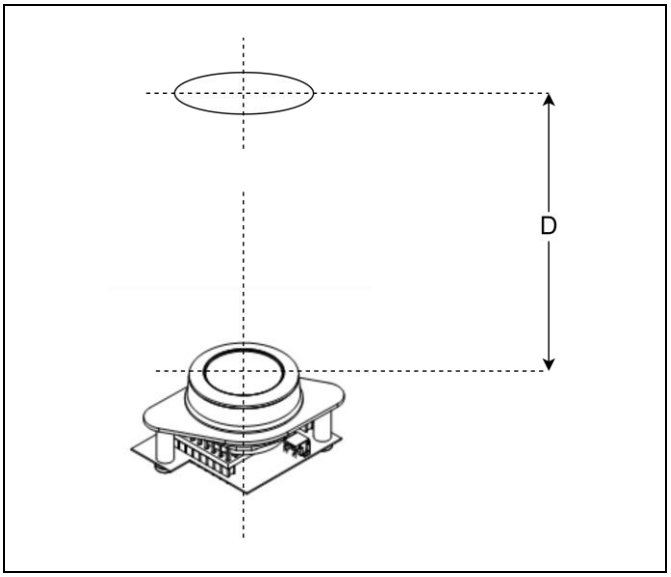

- Align the tag on the antenna central axis.
- See the tag datasheet for the distance D.

5 Hardware Settings

5.1 Main Carrier Board

The Main Carrier Board is equipped with 4 solder jumpers as defined below.

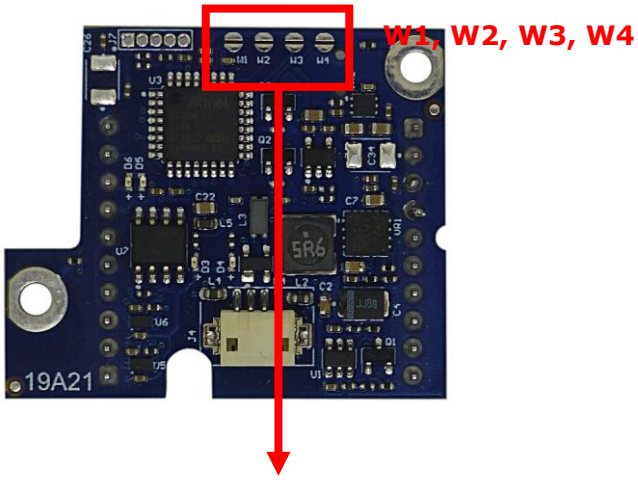

Solder Jumper	
W1	Closed: sets default communication parameters 255, 19200, 8, n, 1.
W2	On: enables 'spontaneous' mode on USB Virtual COM serial line.
W3	On: enables 'keyboard emulation' mode on USB HID Keyboard line.
W4	Not used. Leave opened.

6 Electrical Connections

Observe the following instructions before electrical installation.

- The device must be connected by a skilled qualified person.

Connect the **BLUEBOX** using the 4 poles pin header, 1.25mm, single row, right angle connector, Hirose DF13-4P-1.25H(xx).

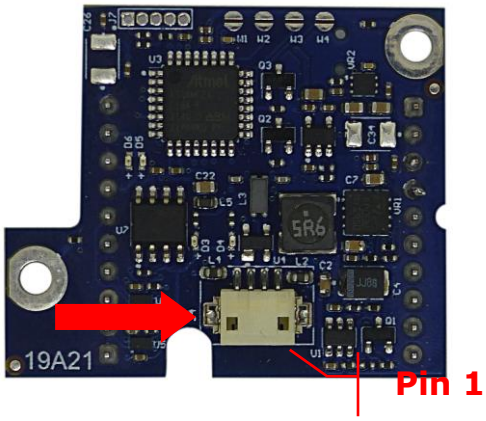

Pin	No	Min	Typical	Max	Description
USB VBUS	1	4.75Vdc	5Vdc	5.25Vdc	DC power supply (VBUS)
USB D-	2				USB Data – (D-)
USB D+	3				USB Data + (D+)
USB GND	4				DC power supply (GND)

An adapter cable (supplied) allows a standard USB connection (type A connector).

7 Status Indications:

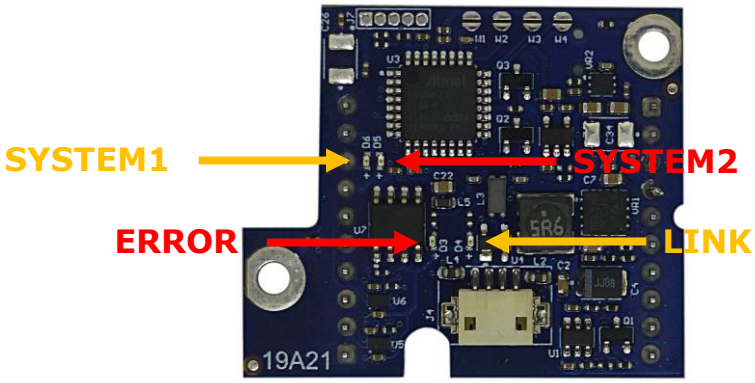

The **BLUEBOX** uses four LEDs. The following tables provides the indicator states and flash rates.

LED	Color	State	Meaning
SYSTEM1	(yellow)	flashing cyclic with 2Hz	antenna (RF field) is activated in 'continuous' mode and no tag is detected
	(yellow)	flashing cyclic with 1Hz	antenna (RF field) is deactivated in 'continuous' mode or 'continuous' mode is disabled
	(yellow)	on	antenna (RF field) is activated in 'continuous' mode and a tag is detected or RF front-end system initialization
	(off)	off	power supply for the RF front-end board is missing or RF front-end board hardware defect or RF front-end system upgrade
SYSTEM2	(red)	flashing	RF front-end system upgrade
	(red)	on	RF front-end board solder jumper W1 closed or RF front-end system initialization

LED	Color	State	Meaning
			or RF front-end system error
	(off)	Off	power supply for the RF front-end board is missing or RF front-end board hardware defect
LINK	(yellow)	flashing	exchanging data with host
	(yellow)	on	system initialization
	(off)	off	power supply is missing or hardware defect
ERROR	(red)	on	main carrier board solder jumper W1 closed or system initialization or system error or system upgrade
	(off)	off	power supply is missing or hardware defect

8 Antenna

The **BLUEBOX** is available with internal antenna directly integrated on the device cover.

The read range of an RFID system always depends on various factors like antenna size, transponder size, transponder IC type, orientation between transponder and reader antenna, position of the transponder versus the reader antenna, noise environment, metallic environment, etc. Therefore all data about read ranges can only be typical values measured under laboratory conditions. In real live applications the read range may differ from the data mentioned in the datasheet.

9 Maintenance, Repair and Disposal

If used correctly, no maintenance and repair measures are necessary

- The device must only be repaired by the manufacturer.
- After use dispose of the device in an environmentally friendly way in accordance with the applicable national regulations.
- Keep the device free from soiling.

10 Mechanical Drawings

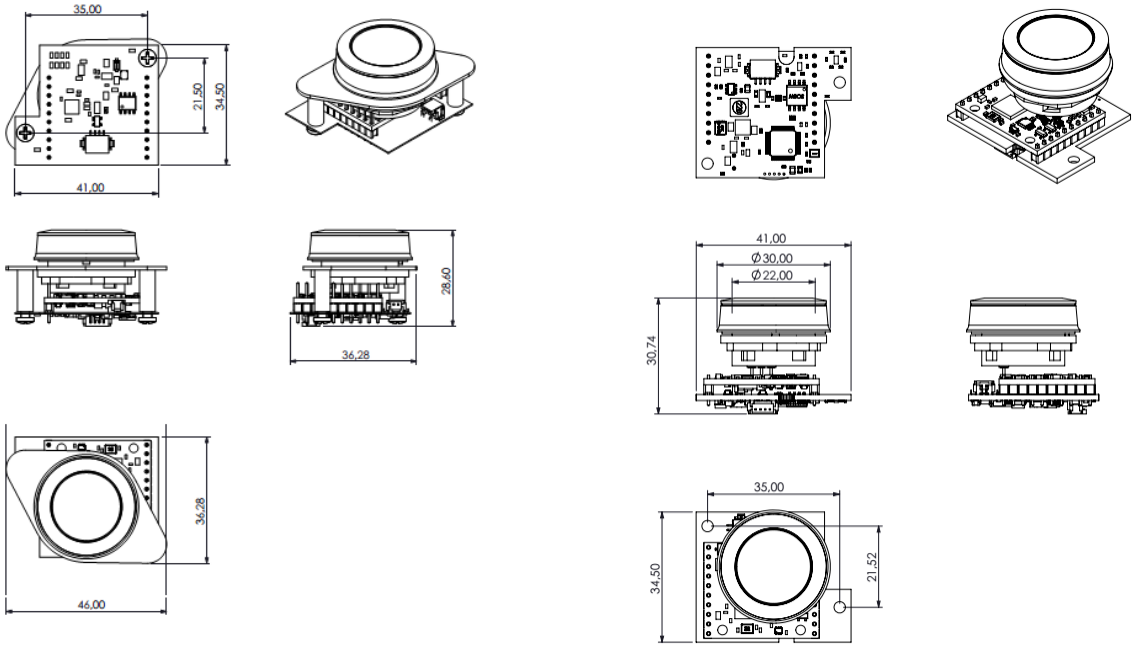

Dimensions in mm.

11 Document Revision History

Date	Revision	Description
25/02/22	1.00	First release.

A. .inf File

```
;-----------------------------------------------------------------------------
; Communication Device Class driver installation file
;
; Version 2.1.0.0 - 16/02/2022
;       - Added BlueBox Panel Reader 22 v2 device.
;       - Changes in the devices string definitions.
; Version 2.0.0.0 - 11/01/2019
;       - New company name.
;       - Removed FH1000 device.
;
;-----------------------------------------------------------------------------

[Version]
Signature="$Windows NT$"
Class=Ports
ClassGuid={4D36E978-E325-11CE-BFC1-08002BE10318}
Provider=%Kronotech%
DriverVer=16/02/2022,2.1.0.0

[Manufacturer]
%Kronotech%=DeviceList,ntamd64

[DeviceList]
%BLUEBOXCXUHF%=Reader, USB\VID_c251&PID_0001
%BLUEBOXCXEUHF%=Reader, USB\VID_c251&PID_0002
%BB2DESKTOPv2%=Reader, USB\VID_28AD&PID_0004&MI_00
%PANELREADER22%=Reader, USB\VID_c251&PID_0003&MI_00
%PANELREADER22v2%=Reader, USB\VID_28AD&PID_0005&MI_00

[DeviceList.ntamd64]
%BLUEBOXCXUHF%=Reader, USB\VID_c251&PID_0001
%BLUEBOXCXEUHF%=Reader, USB\VID_c251&PID_0002
%BB2DESKTOPv2%=Reader, USB\VID_28AD&PID_0004&MI_00
%PANELREADER22%=Reader, USB\VID_c251&PID_0003&MI_00
%PANELREADER22v2%=Reader, USB\VID_28AD&PID_0005&MI_00

;-----------------------------------------------------------------------------
;  Installation
;-----------------------------------------------------------------------------

[Reader]
include=mdmcpq.inf
```

```
CopyFiles=FakeModemCopyFileSection
AddReg=Reader.AddReg

[Reader.AddReg]
HKR,,DevLoader,,*ntkern
HKR,,NTMPDriver,,usbser.sys
HKR,,EnumPropPages32,,"MsPorts.dll,SerialPortPropPageProvider"

[Reader.Services]
AddService=usbser, 0x00000002, DriverService

[DriverService]
DisplayName=%DRIVER.SVC%
ServiceType=1
StartType=3
ErrorControl=1
ServiceBinary=%12%\usbser.sys

;-------------------------------------------------------------------------------
;  String Definitions
;-------------------------------------------------------------------------------

[Strings]
Kronotech     = "Kronotech Srl"
DRIVER.SVC    = "BlueBox USB VCom Driver"
BLUEBOXCXUHF = "BlueBox CX UHF USB VCom Port"
BLUEBOXCXEUHF= "BlueBox CX E UHF USB VCom Port"
BB2DESKTOPv2 = "BlueBox Gen2 DESKTOP USB VCom Port"
PANELREADER22= "BlueBox Panel Reader 22 v1 USB VCom Port"
PANELREADER22v2= "BlueBox Panel Reader 22 v2 USB VCom Port"
```

B. Driver Install on Windows 8 OS

Windows 8 does not allow installing drivers that are not signed by Microsoft. Below is described how to de-activate the driver signing check.

1) First, select "**Settings**" on the right side of your screen:
2) Select "**Change PC Settings**":
3) Navigate to "**General**" settings and then scroll down to "**Advanced Startup**". Click on "**Restart**":

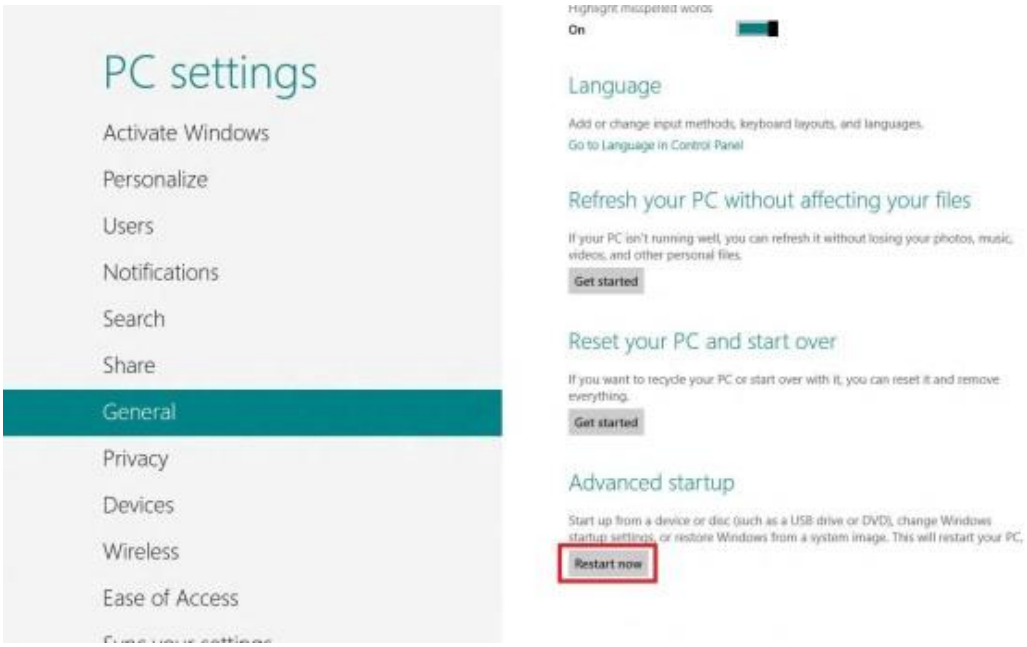

4) After that, Click on "**Troubleshoot**":

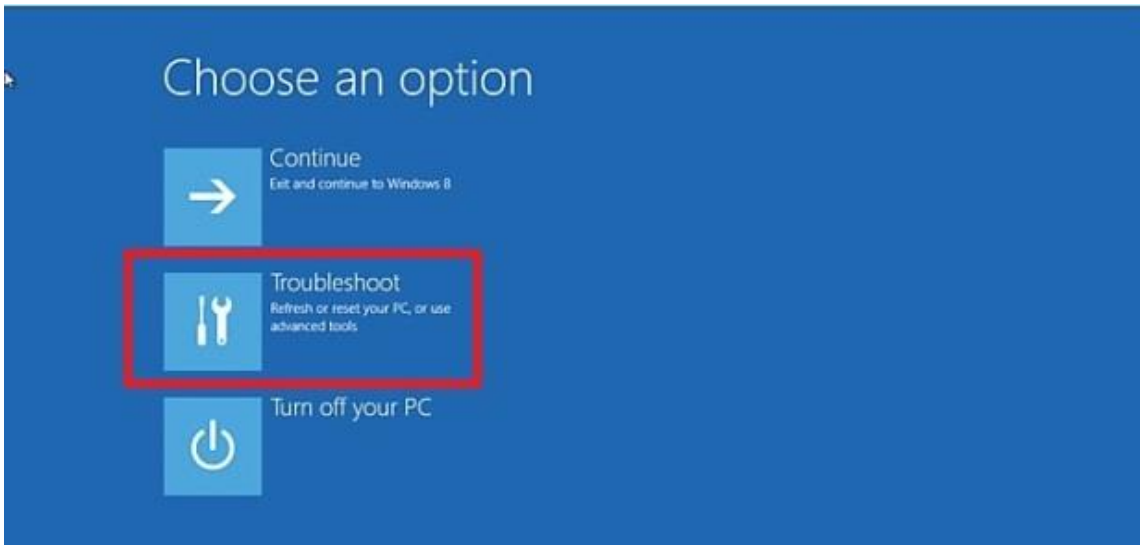

5) On the next screen, choose "**Advanced Options**":

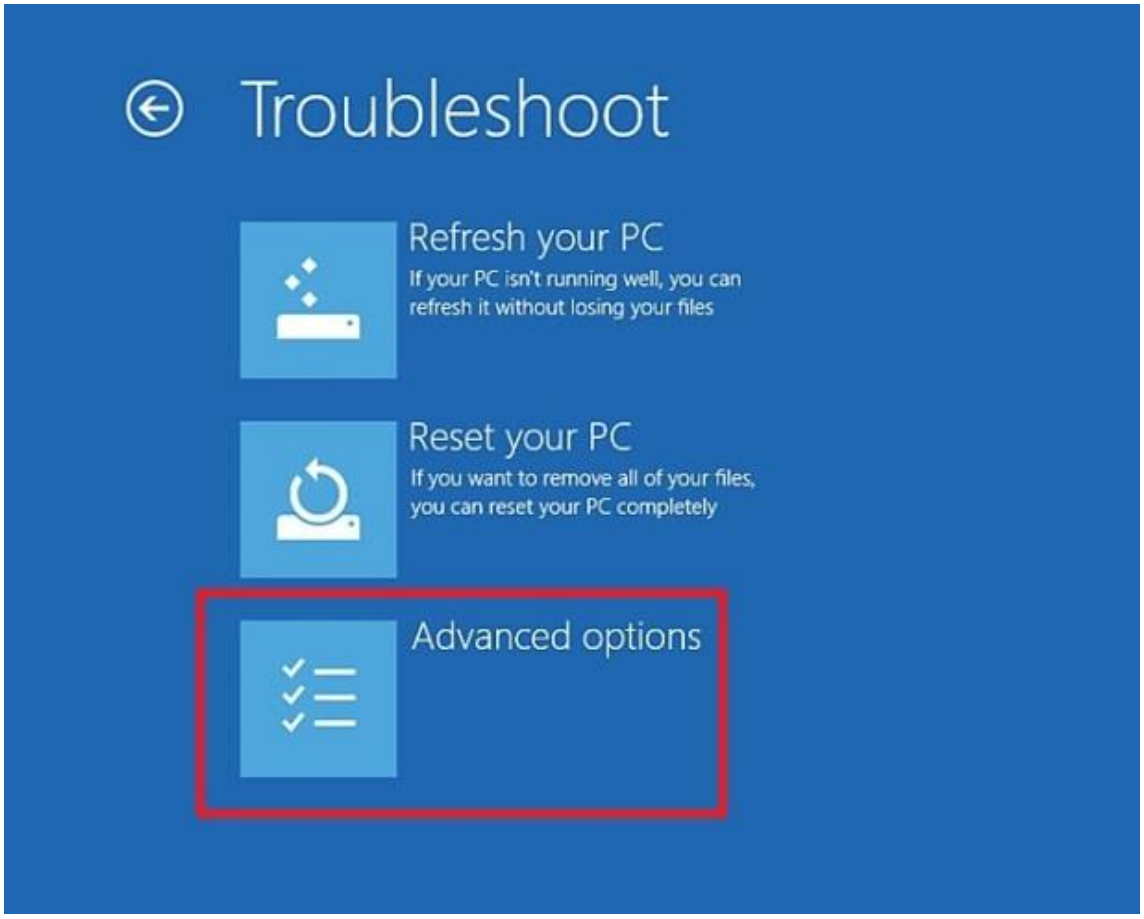

6) Then click on "**Startup Settings**":

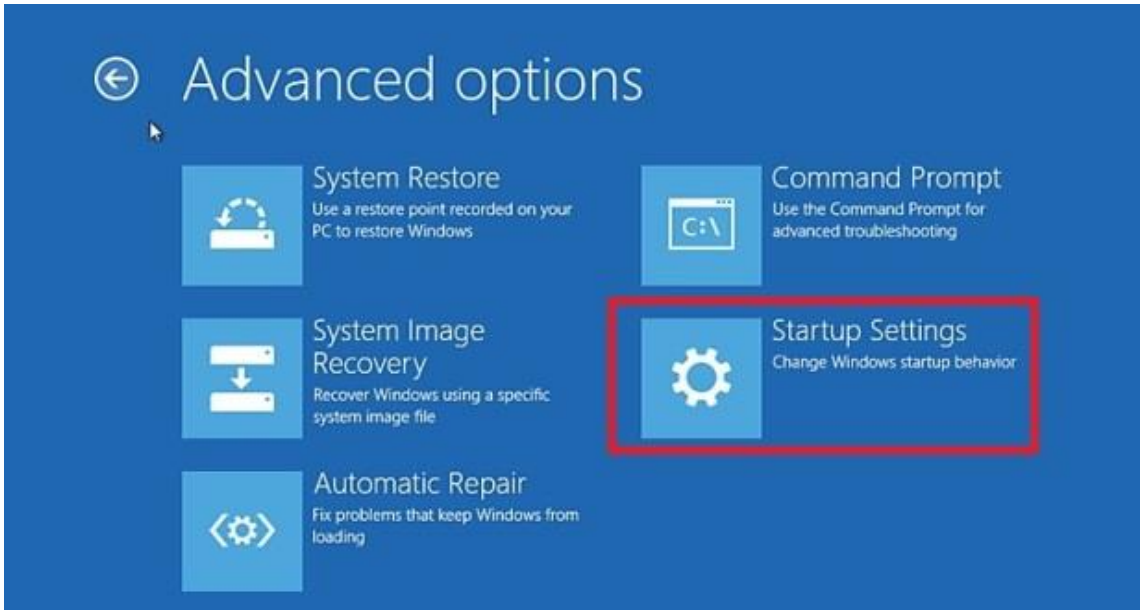

7) Then click on the "**Restart**" button:

8) After your computer reboots, another screen will appear where you will be asked to press a number to choose an option. So press **7** or **F7**:

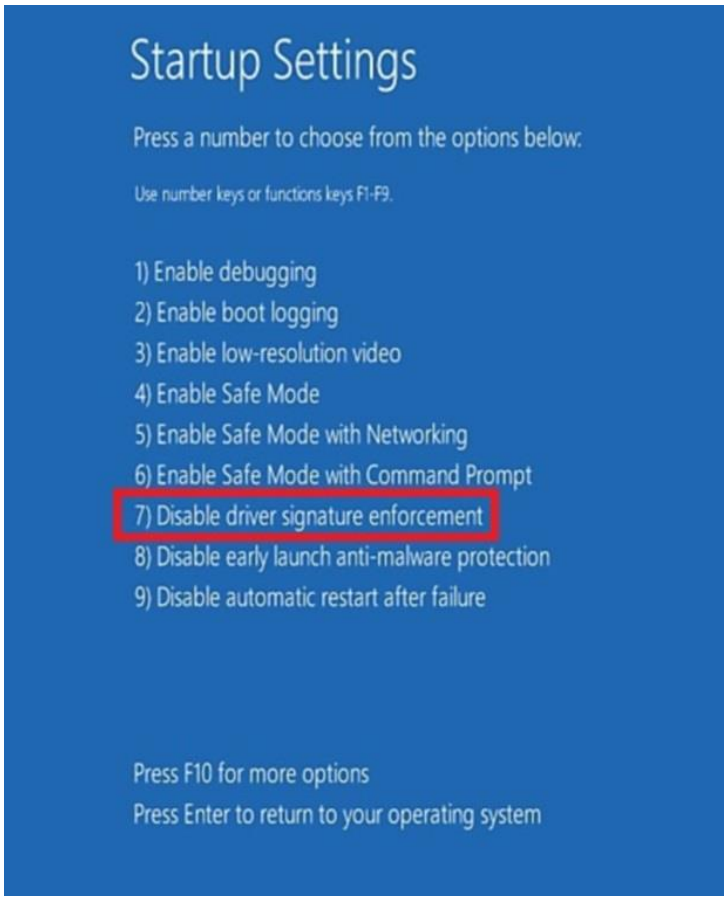

9) When you install the driver, this prompt will appear on screen. Select "**Install this driver software anyway**":

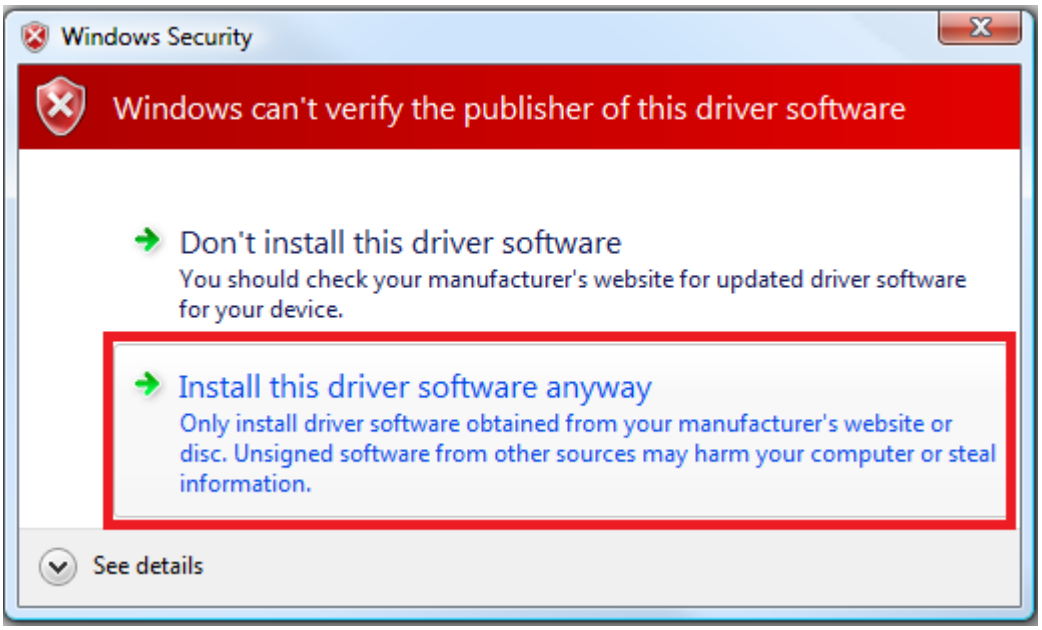

This device complies with Part 15 of the FCC Rules. Operation is subject to the following two conditions: (1) this device may not cause harmful interference, and (2) this device must accept any interference received, including interference that may cause undesired operation

NOTE: This equipment has been tested and found to comply with the limits for a Class B digital device, pursuant to Part 15 of the FCC Rules. These limits are designed to provide reasonable protection against harmful interference in a residential installation. This equipment generates, uses and can radiate radio frequency energy and, if not installed and used in accordance with the instructions, may cause harmful interference to radio communications. However, there is no guarantee that interference will not occur in a particular installation.
If this equipment does cause harmful interference to radio or television reception, which can be determined by turning the equipment off and on, the user is encouraged to try to correct the interference by one or more of the following measures:
-- Reorient or relocate the receiving antenna.
-- Increase the separation between the equipment and receiver.
-- Connect the equipment into an outlet on a circuit different from that to which the receiver is connected.
-- Consult the dealer or an experienced radio/TV technician for help.

Warning: changes or modifications not expressly approved by the party responsible for compliance could void the user's authority to operate the equipment