MIRADOR

111 DA e-Motion+

INSTRUCTION MANUAL

4 PILLARS

THANK YOU FOR PURCHASING OUR MIRADOR e-Motion+

This manual will provide you with clear and detailed instructions on how to safely and correctly assemble and maintain your pergola, to ensure it brings you many years of use and enjoyment.

IMPORTANT
Warning: Important safety instructions. It is important for the safety of persons to follow these instructions. Save these instructions.

This product can be used by children aged from 8 years and above and persons with reduced physical, sensory or mental capabilities or lack of experience and knowledge if they have been given supervision or instruction concerning use of the product in a safe way and understand the hazards involved. Children shall not play with the product. Cleaning and user maintenance shall not be made by children without supervison.

Intended use
This pergola is intended for outdoor domestic use in residential environments, and to protect users from direct sunlight, glare and heat . Any use or modification to the pergola not included in this manual shall be considered as improper use, which may cause considerable danger to users and property and will void the product warranty.

For parts and customer service, please call 1-800-867-9018 in the U.S. and Canada (English and Spanish)Monday – Friday, 8:30 am to 4:30 pm, Pacific Time. Or email: support@miradoroutdoor.com

Digital instruction manual is also available on our official website **www.miradoroutdoor.com** for your reference.

TABLE OF CONTENTS

- Before Assembling Your Pergola 3
- Important Safety Advice 5
- Technical Data 9
- List of Parts 10
- Installation 12
- Operation of Your Mirador Pergola 34
- Problem Solving, Care & Maintenance 35
- Warranty & Complaints Procedure 38
- Disassembly and Disposal of the Product 39
- Certification Information 40

BEFORE ASSEMBLING YOUR PERGOLA

WARNING: Improtant safety instructions. Follow all instructions, since incorrect installation can lead to severe injury.

Make sure you have all the tools required for assembling your pergola

In order to assemble your pergola safely and correctly, please ensure you have access to the following tools and accessories, all of which are not provided.

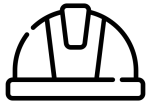

Hard hat

Protective gloves

Box cutter

Tape measure

Spirit level

Phillips screwdriver

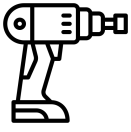

Cordless screwdriver

Hexagonal spanner/ wrench set

Hammer drill

Hammer

2 step ladders

Scissors

Check to ensure there are no missing parts

Before you begin installation, please check that you have all the parts required to assemble your e-Motion. Please also carefully check that the quantity of parts match with that of the model you have purchased.

If any parts are missing, please refer **Warranty & Complaints Procedure** to contact customer service before beginning the installation.

Prepare the parts you will need for each step

In the **Installation** section of the manual, each step indicates the necessary parts and quantities required to complete the step. We recommend that you prepare the parts you will need for each installation step. Doing this will save you time and effort during assembly. If possible, place the parts on cardboard or other soft surface to protect from scratching the painted surfaces.

Select a suitable location:

The ground should be solid and flat	The ground should be level	Sufficient water drainage	Easy access to power	No overhanging trees and powerlines
				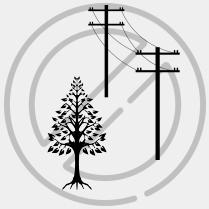

Warning:

Most terraces or patios are designed with a slight slope to prevent (rain) water from forming pools or reaching the house or other structures. For the perfect pergola installation, a level concrete surface without such a slope is required. Small pebbles could also prevent the pergola from being safely secured on the ground.

If the pergola is installed on an uneven surface, it may prevent accessory components from working correctly and may void the product warranty.

Prepare a foundation:

To prepare it, you need to:

- check for underground pipes and cables (Call 811 before you dig if you live in the USA)
- check with your local authorities regarding any building permits that may be required
- contact a reliable contractor to have concrete base if you dont have one

Do not assemble the pergola on sandy, muddy or loose soil, as the stakes do not have the suffcient anchorage to be installed in these types of soil.

IMPORTANT SAFETY ADVICE

For the safety of all persons installing and using the pergola, it is important to follow the safety guidelines below.

The pergola must be positioned and fixed on flat level surface.	Always wear appropriate work shoes, gloves and eye protection when working.	Work well away from power lines, particularly when handling metal parts.	If using power tools or a ladder, always follow the manufacturer's safety instructions.
	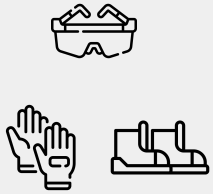	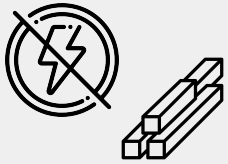	

Make sure the pergola complies with local building regulatory codes.	Working at heights can be dangerous. Always wear protective clothing to prevent injury in the event of a fall.	Only use ladders and scaffolding with a sufficiently high load bearing capacity.	Before installing the drive, remove any unnecessary cords and disable any equipment not needed for powered operation.
	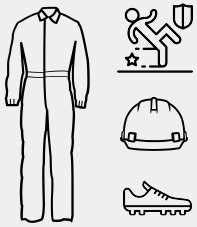		

Hazardous unprotected moving parts of the drive shall be installed higher than 2.5m above the floor or other level that could provide access to it.

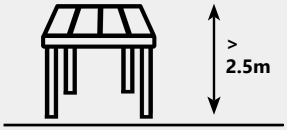

Keep clothing and body parts away from the pergola to prevent them from getting caught in the moving parts.

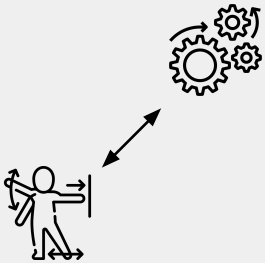

Foliage or other foreign objects on the louvers and in the guide rails should be removed regularly, to prevent damage to the pergola.

Put the louvers into the vertical position during snowfall or wind to avoid damage.

Only use replacement parts that are approved by the manufacturer.

✓ Approved

Electrical installation may only be carried out by certified personnel according to the applicable regulation. (e.g. VDE 100 for europe)

Make sure all electrical connections are disconnected from the mains during installation.

Mirador electric pergolas should only be connected to power sources that have been installed by a licensed electrical contractor.

The pergola should only be remote controlled when you have a full view of the moving parts.

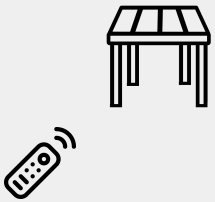

Installation of non-Mirador branded accessories will void the product warranty and can damage the operating mechanism.

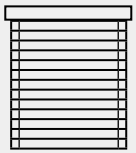

Mirador®

Dispose of all plastic bags safely. Keep them out of the reach of children.

Keep children and pets away from the assembly area until the work is completed.

Changes to the design or configuration of equipment may not be made without consulting the manufacturer or authorized representative.	Hot items such as recently used grills, fire pits etc. must not be stored under or close of the pergola.	Prior to each operation, visually check the pergola for damage. If damage is visible, stop using it immediately and contact authorized personnel to repair the damage.	If the supply cord is damaged, it must be replaced by the manufacturer, its service agent or similarly qualified people in order to avoid a hazard.

Do not climb on the louvers.	Do not touch moving parts during operation.	Do not place anything on the louvers.	Do not attempt to assemble the pergola in windy or wet conditions.
		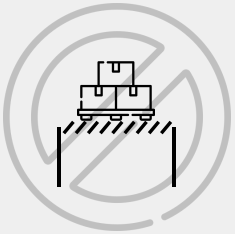	

Do not start the roof mechanism in case of frost or ice build-up, as it may damage the drive of the louvers.	Do not allow children to contact the fixed controls. Keep remote controls away from children.	Hanging objects on the pergola may cause serious damage and is not permitted.
		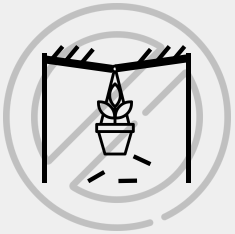

WARNING:
When using outdoor use portable lighting products, basic safety precautions should always be followed to reduce the risk of fire, electric shock, and personal injury, including the following:

WARNING	WARNING	WARNING	WARNING
Do not mount or support flexible light in a manner that can damage the outer jacket or cord insulation.	Risk of Fire and Electric Shock. Uncoil flexible light prior to plugging in. Do not install near flammable liquids.	Material may become brittle when cold. Do not install where it may be stepped on or subject to physical damage.	Use only outdoor extension cords, such as type SW, SOW, STW, STOW, SJW, SJOW, SJTW, or SJTOW. This designation is marked on the wire of the extension cord.
			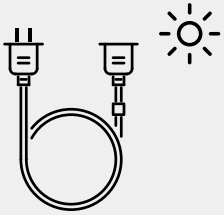

CAUTION	CAUTION	CAUTION
Suitable for outdoor use.	Risk of Electric Shock. Do not use with extension cord near water or where water may accumulate.	For use only on GFCI protected circuits.
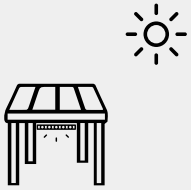		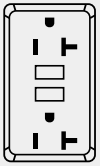

TECHNICAL DATA

Pergola	Continuous Operating Cycle	10 cycles
	Sound Pressure Level	≤70 dB
	Ingress Protection Rating	IPX5
	Wind Resistance	Class 6/ 9 BFT
Linear Actuator	Input Voltage	24V DC
	Ingress Protection Rating	IP66
Control Box	Input Voltage	24V DC
	Output Voltage	24V DC
	Ingress Protection Rating	IPX5
Light LED Strip	Input Voltage	24V DC
	Wattage Per Meter	≤10W
	Ingress Protection Rating	IP67
Power supply	Input Voltage	100 to 240V
	Ingress Protection Rating	IP67
	Maximum Power	350W
Control	Control Method	Remote Control + App Control
	LTE Frequency band	B1, B3, B7, B8, B20, B28A, B38, B40
	LTE Max Transmit power	23dBm±2dBm
	Remote control frequency band	2400MHz~2483MHz
	Remote control Max Transmit power	0dBm
Data Center	North America	West Coast: Oregon
		East Coast: Virginia
	Europe	Sweden
		Amsterdam
		Frankfurt

LIST OF PARTS

PLEASE NOTE that the anchor bolts provided may not be suitable for your chosen installation location. Please check before proceeding.

DO NOT USE AN IMPACT CORDLESS SCREW DRIVER TO ASSEMBLE THE PERGOLA. USE A STANDARD CORDLESS SCREW DRIVER ON THE BASE SETTING. ALL HOLES HAVE BEEN PREDRILLED OR FITTED FOR ASSEMBLY.

REF		Part name	QTY (3x3m)	QTY (3x3.6m) (3.6x3.6m)	QTY (3x4m) (3.6x4m)
A		Standard corner pillar	3	3	3
A2	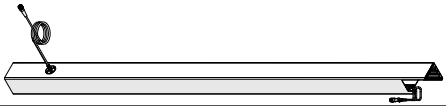	Cabled corner pillar	1	1	1
B1		Side beam with motor	1	1	1
B2		Side beam without motor	1	1	1
C		End beam	2	2	2
D		Louver	19	23	25
G		Connecting strip	1	1	1

REF	Part name	QTY (3x3m)	QTY (3x3.6m) (3.6x3.6m)	QTY (3x4m) (3.6x4m)	REF	Part name	QTY (3x3m)	QTY (3x3.6m) (3.6x3.6m)	QTY (3x4m) (3.6x4m)
I	Foot plate cover	4	4	4	W	Anchor bolt M8x80mm	16	16	16
J	Foot plate	4	4	4	X	Hex key (small)	1	1	1
K	Louver end cap	37+2	45+2	49+1	Y	Hex key (large)	2	2	2
L	Louver end cap with control arm	1	1	1	Z	12mm SDS Plus Drill Bit	1	1	1
M	Shaft support cover	38+2	46+2	50+2	Z4	Power supply	1	1	1
N	Pillar cover	4	4	4	Z5	LED light strip	2	2	2
O	Screw ST5.65x 45mm	24+2	24+2	24+2	Z6	Remote control	1	1	1
P	Screw M5x 12mm	76+4	92+5	100+5	Z7	2.4G and 4G Antenna	1	1	1
Q	Screw 4.2x 25mm	76+4	92+5	100+5	Z8	Waterproof tape	1	1	1
R	Screw 5.5x 19mm	12+2	12+2	12+2	Z9	Screw ST4.8x 13mm	4	4	4
S	Cotter pin	19+3	23+3	25+4	Z10	Spare plastic pin	0+10	0+10	0+10

INSTALLATION

1. Set up the corner pillars

Installation Video

1A

Fix the cable flange with screws Z9 onto the cabled corner pillar A2 , and make sure the cable is hanging outside.

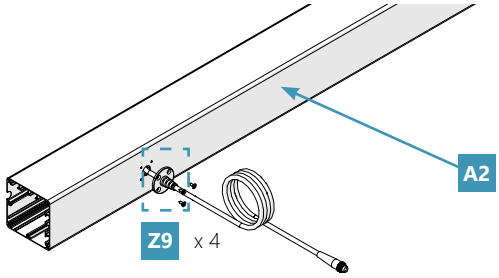

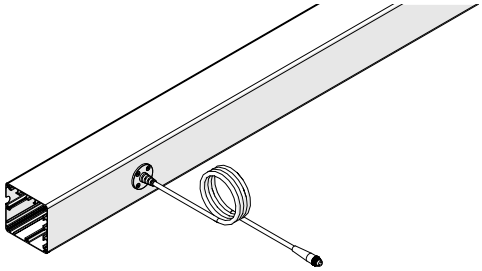

Z9 x 4

A2 x 1

1B

Slide the foot plate cover I with its wide opening facing outwards on the straight end of the cabled corner pillar A2 .

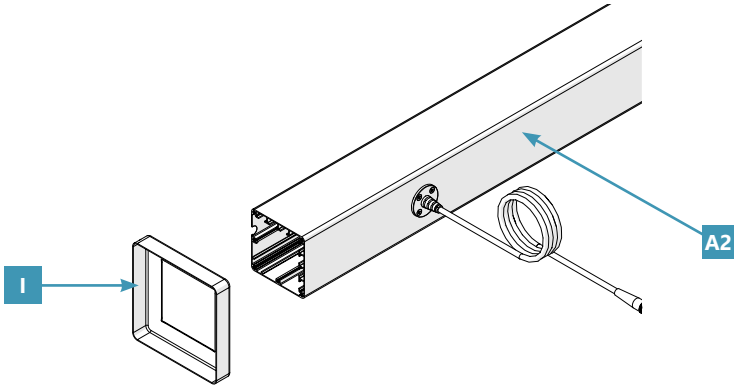

I x 1

1C

Push the foot plate **J** against the straight end of the cabled corner pillar **A2** . It only fits in one direction and in one position. If in doubt, rotate it until it fits easily.

Screw in the foot plate **J** with 6 screws **O** using a cordless screwdriver.

O x 6

J x 1

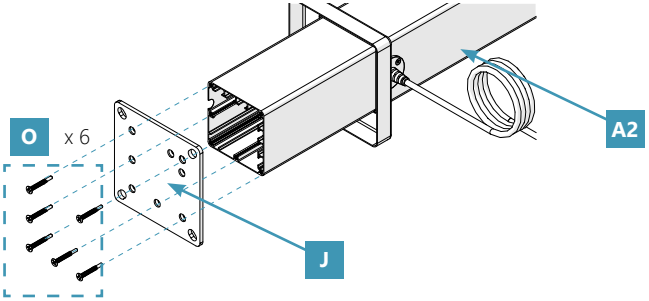

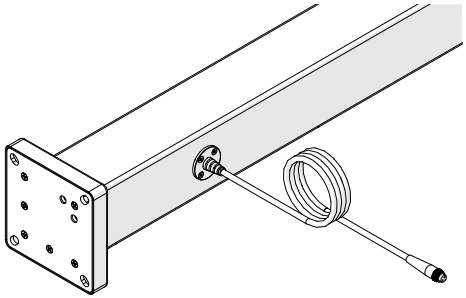

1D

Repeat steps **1B** – **1C** to assemble the foot plates **J** of the 3 standard corner pillar **A** .

I x 3

O x 18

J x 3

A x 3

x 3

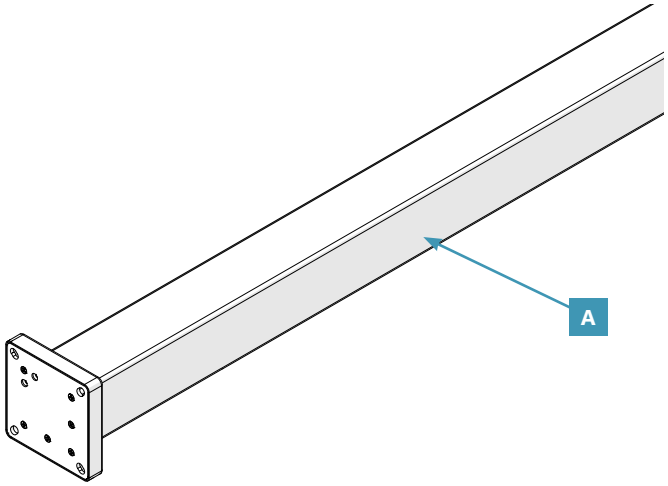

2. Connect the side beam with motor B1 to the cabled corner pillar A2 and a regular corner pillar A

2A

Pull out the cable at the end of the side beam with motor B1 through the small cut-out.

B1 x 1

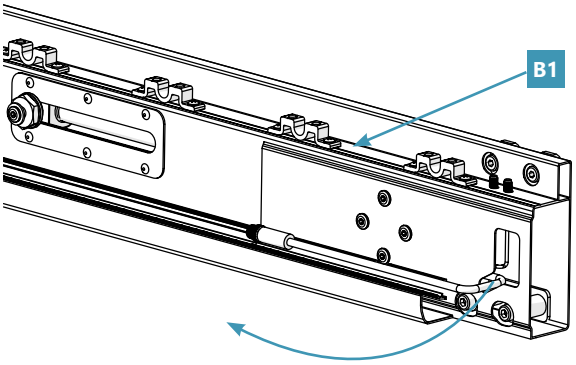

2B

Using a hex key (large) Y , slightly loosen the 8 built-in screws at the both ends of the side beam with motor B1 (4 on each side).

Y x 1

B1 x 1

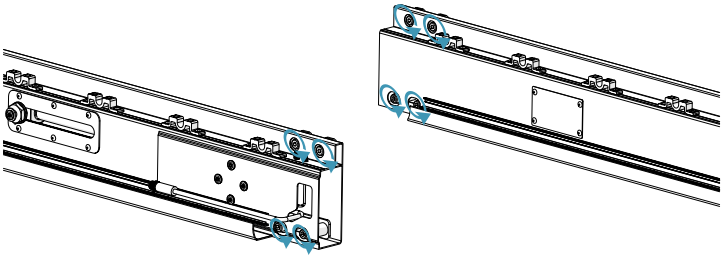

2C

Lay two corner pillars (A & A2) and place the side beam with gearbox B1 on the floor as shown in the picture.

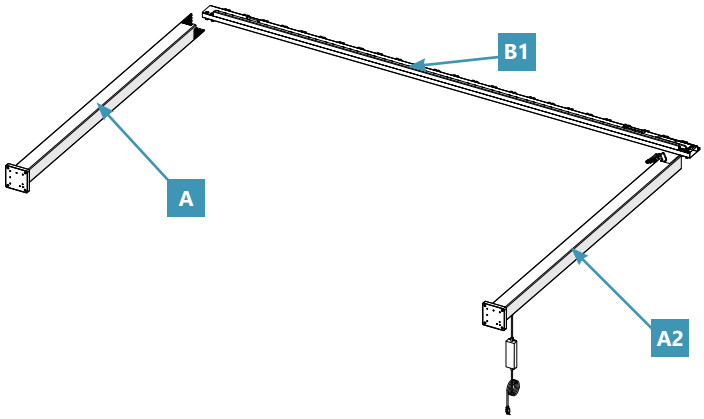

A2 x 1

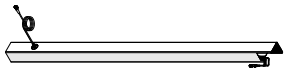

B1 x 1

2D

Slide beam with motor B1 into the grooves of the cabled corner pillar (A & A2) in such a way that the slot nuts of the side beam with motor B1 interlock with the slots in the cabled corner pillar (A & A2) .

Warning:
Pull the cables out of the cabled corner pillar. Take care not to crush or squeeze the cables.

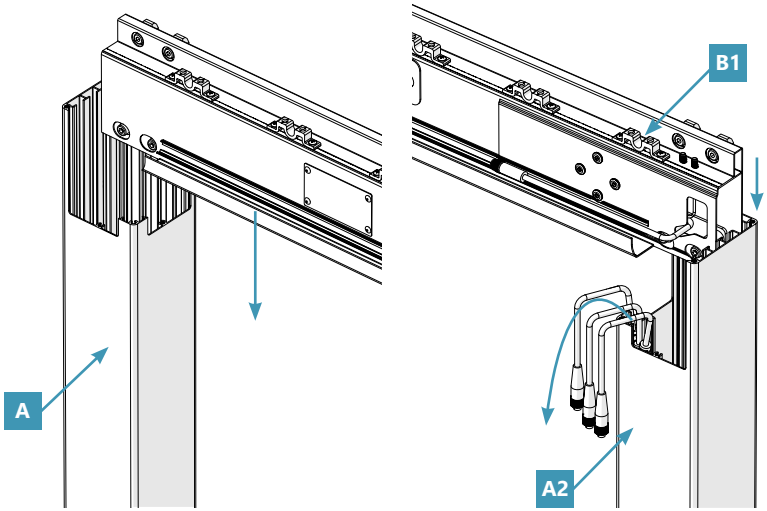

2E

Tighten the 8 screws (4 on each side) with the hex key Y .

Y x 1

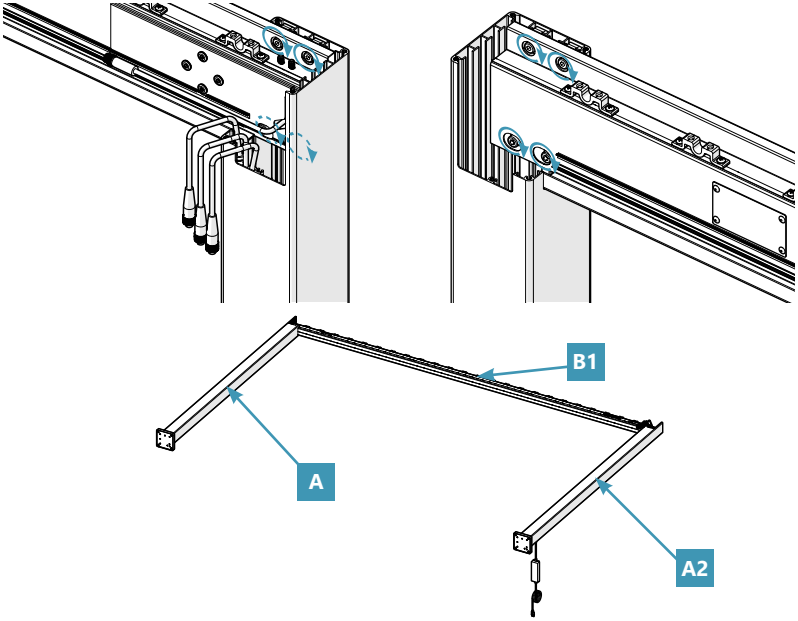

3. Connect the side beam without motor B2 to the remaining two regular corner pillars A

3A

Repeat steps 2A - 2E to connect the beam without motor B2 with the remaining two corner pillars A .

Y x 1

B2 x 1

A x 2

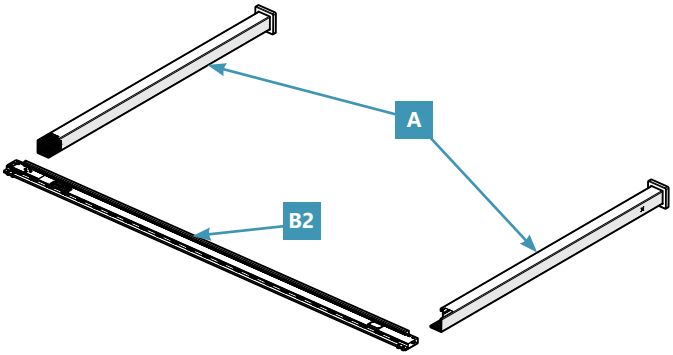

4. Slide in the two end beams

This phase requires four persons and at least two stepladders.
Make sure that the stepladders are standing securely to avoid falling.

Only use ladders suitable for this kind of installation work.

4 PEOPLE REQUIRED

4A

Stand the two structures built during steps 2 and 3 in an upright position, and place them at one end beam length away from one another. Make sure that one person is supporting each corner leg (A & A2) to prevent the structures from falling.

Reminder:
When determining the installation direction of the product, please consider the opening direction of the louvers as well as the desired sunshade effect.

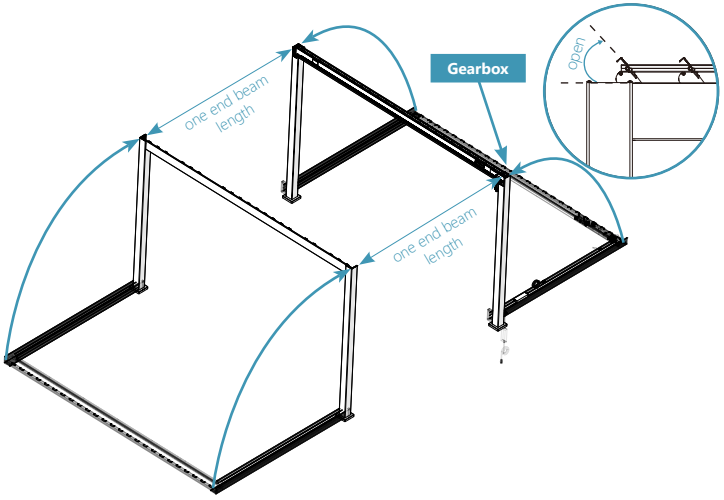

4B

Slightly loosen the 8 built-in screws at both ends of the end beam C .

Y x 1

C x 1

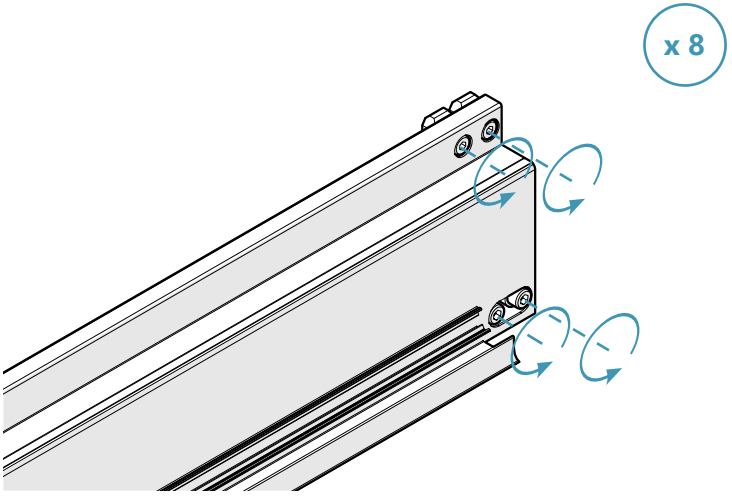

4C

Slide the slot nuts of the end beams **C** from above into the slots of the corner pillars **A**.

C x 1

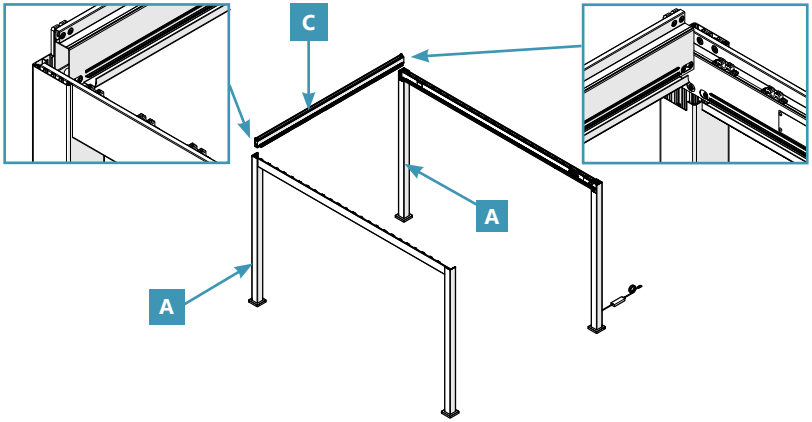

4D

Once the beam is in the correct position, tighten the 8 built-in screws on both ends using the hex key **Y** provided.

Y x 1

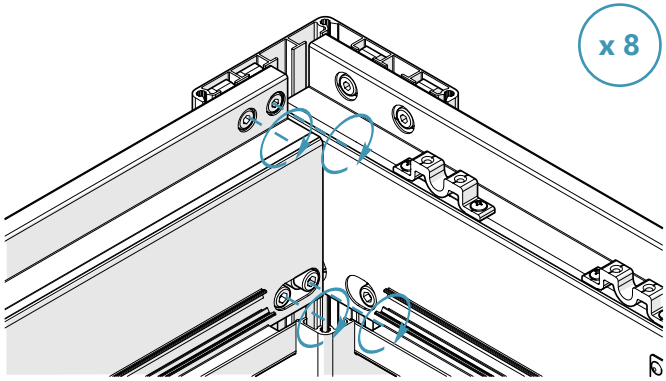

4E

Install the other end beam **C** by repeating steps **4B** - **4D**.

Y x 1

C x 1

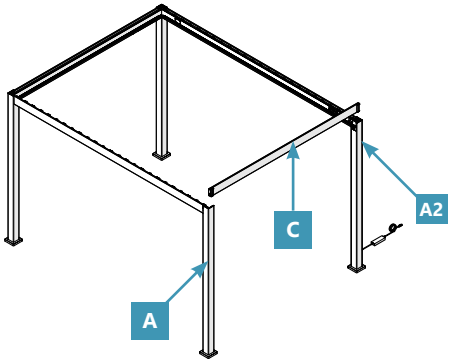

5. Install the LED strip lights

READ AND FOLLOW ALL SAFETY INSTRUCTIONS

- Do not cover this product as the covering may cause the flexible light to overheat and melt or ignite.
- Do not operate with the flexible light tightly coiled.
- Do not puncture, cut, shorten, or splice the flexible lighting.
- Do not route the cord or flexible lighting through walls, doors, windows or any like part of the building structure.
- Do not use if there is any damage to the light or cord insulation. Inspect periodically.
- Do not submerge flexible light in liquids, or use the product in the vicinity of standing water or other liquids.
- Secure this flexible light using only the hangers or clips provided. Do not secure this product or its cord with staples, nails, or like means that may damage the insulation or permanently attach to the building structure.
- Do not subject flexible lighting to continuous flexing.
- (For extendible units) Do Not Exceed The Length in Feet Permitted By The Marking.

SAVE THESE INSTRUCTIONS

5A

Place both LED light strips Z5 along the grooves on the side beams (B1 & B2) and end beams C , as shown in the figure. Put the connection socket of the LED light strip Z5 close to the cabled corner pillar A2 , and put the end of the LED light strip Z5 into the top of the corresponding corner pillar if needed.

Z5 x 2

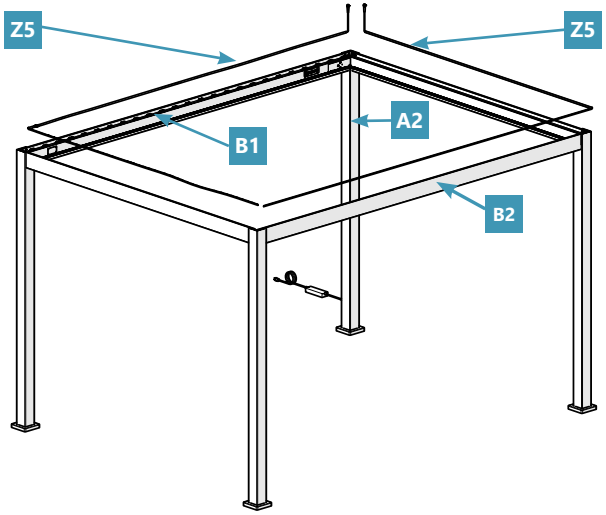

5B

As shown in the figure, press both LED light strips Z5 firmly into the light strip slots one by one to ensure they are fitted evenly.

Z5 x 2

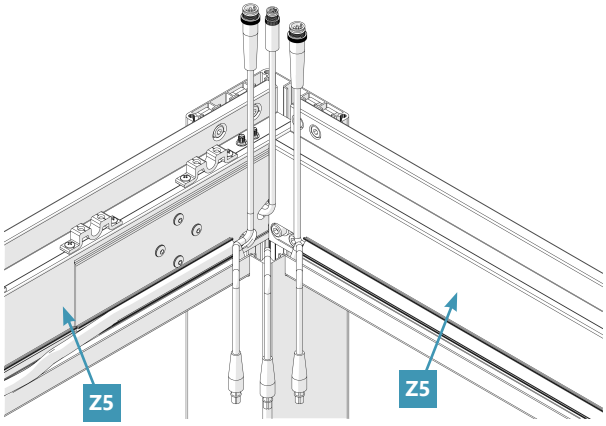

6. Connect the power cables of the motor and LED strip lights Z5

6A

Connect the cable connector (5-pin) of the side beam with motor B1 into the corresponding connector socket on the top of the cabled corner pillar A2 . Then tighten the waterproof connector

Connect the cable connector (4-pin) of the LED light strip Z5 into the corresponding connector socket on the top of the cabled corner pillar A2 . Then tighten the waterproof connector (there is no need to differentiate the plug sockets of the two light strips as they are the same).

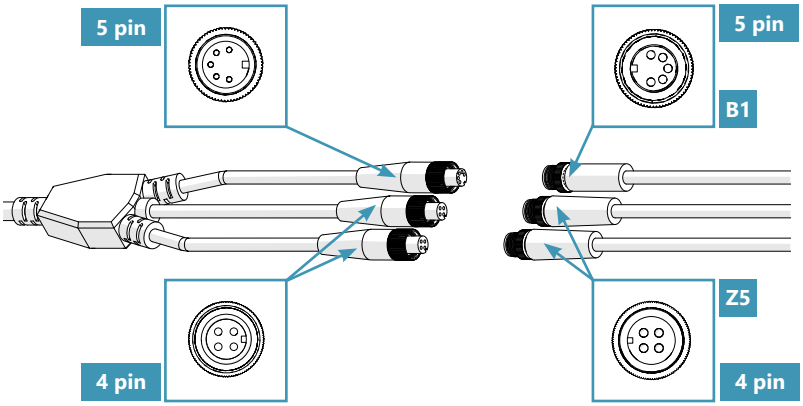

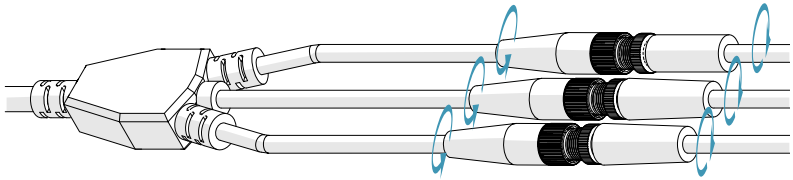

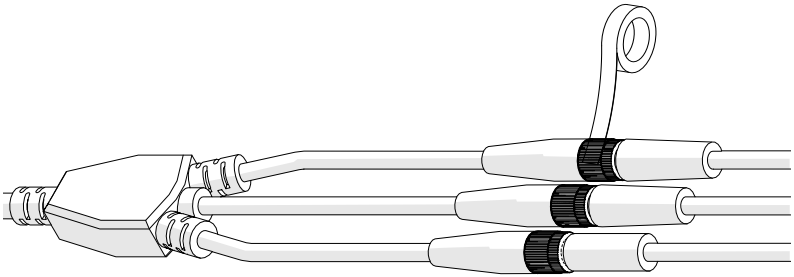

Z5 x 2

Z8 x 1

B1 x 1

A2 x 1

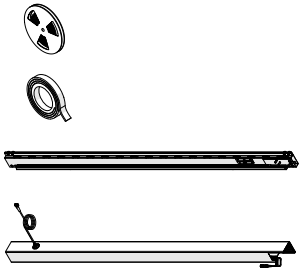

Tip:
It is recommended to wrap waterproof adhesive tape on the waterproof connectors to prolong their service life.

6B

Carefully tuck all connected cables and connectors at the top of the structure back into the corner pillar.

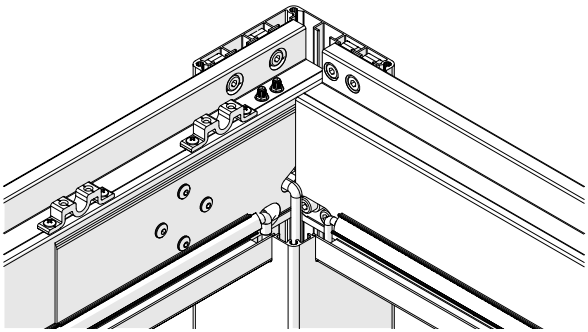

7. Check the alignment of the frame and the distance between the corner pillars

You are now almost done installing the main frame of the pergola. Please double check to ensure all corner pillars, beams, and cables have been installed and fitted correctly. You may have to unscrew certain bolts during this step.

You will also need a tape measure and a spirit level to complete this step.

7A

Choose one of the corner pillars (A & A2) and work from this pillar. Choose this pillar carefully as it will define the final installation location of the pergola.

Use a spirit level to measure against both of the inner sides to ensure that the corner pillar is straight and level.

Make sure this corner pillar does not move position during the remaining installation steps.

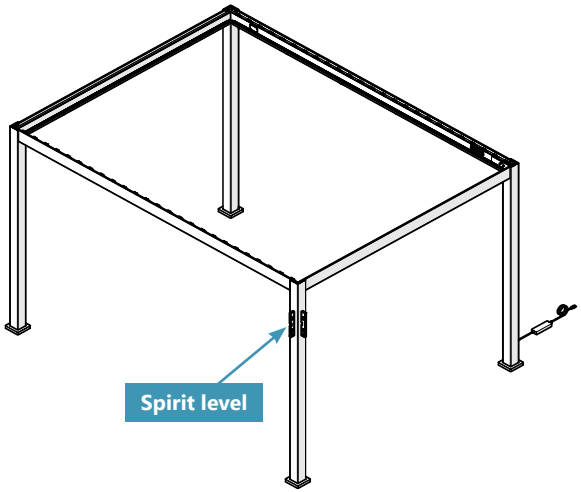

7B

Measure the distances between the adjacent corner pillars. Adjust accordingly and ensure the distances match those shown in the opposite figure.

Size	a		b	
(m)	(mm)	(inch)	(mm)	(inch)
3x3	2790.4	109.9	2790.5	109.9
3x3.6	3400	133.9	2790.5	109.9
3x4	3705	145.9	2790.5	109.9
3.6x3.6	3400	133.9	3400	133.9
3.6x4	3705	145.9	3400	133.9

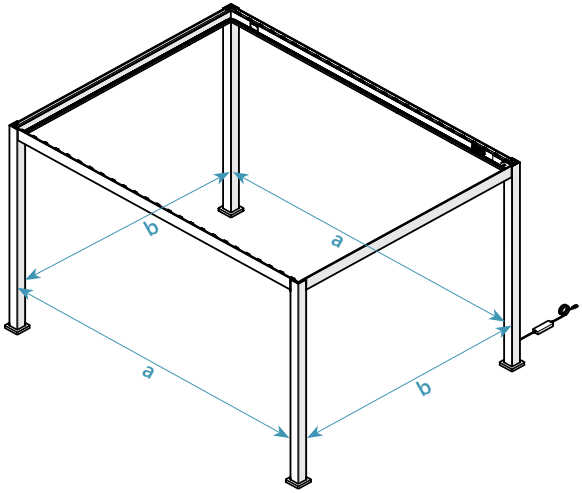

7C

Measure the diagonal distance between the opposite corner pillars. Adjust the other corner pillars accordingly until both diagonal distances are equal. You may have to repeat the above steps after completing the remaining steps.
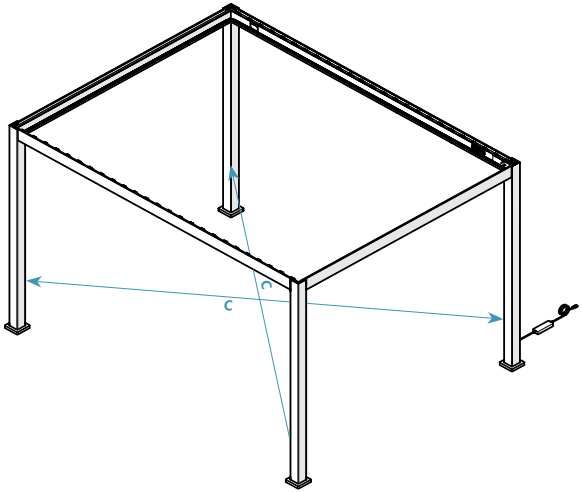
Size	c	
(m)	(mm)	(inch)
3x3	3951	155.6
3x3.6	4403	173.3
3x4	4643	182.8
3.6x3.6	4813	189.5
3.6x4	5033	198.1