7D

Check that all corner pillars are straight and level using a spirit level.
If the corner pillars or beams are still not level, this means that your main building surface isn't sufficiently level, and that you will need to raise the corner pillars that are positioned lower than the others. (Contact qualified workers if needed.)

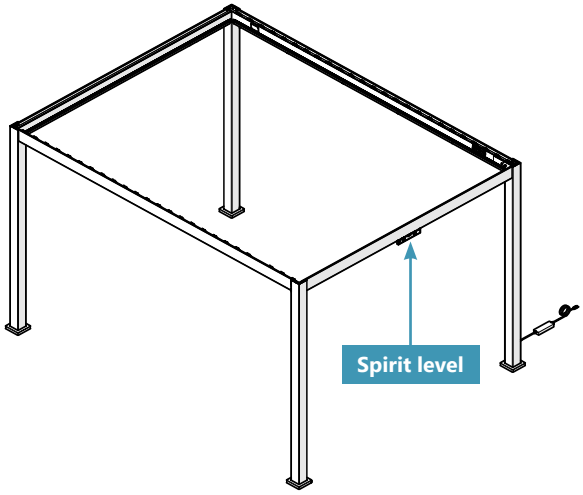

Warning:
If you do not adjust the main structure at this point, you may encounter problems when fitting the louvers and/or accessories to the frame.

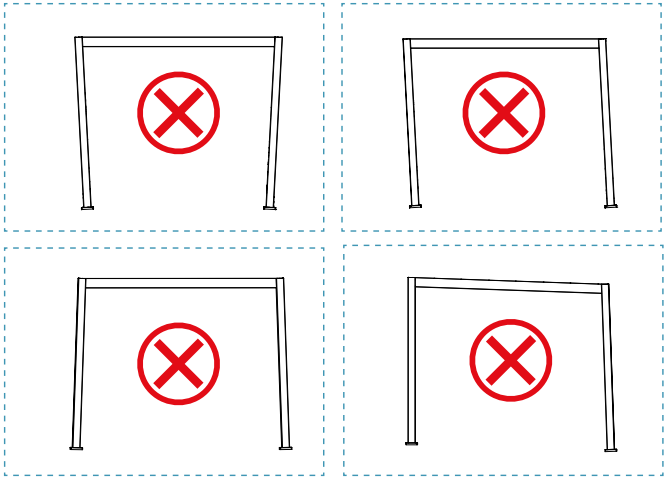

8. Install the louvers, and connecting strip

8A

Prepare the driving louver: select one of the louvers D to be the driving louver.

Attach the louver end cap with control arm L to one end of the driving louver, and attach an louver end cap K to the other end of the driving louver. Use two screws Q on each side, and fix them firmly using a cordless screwdriver.

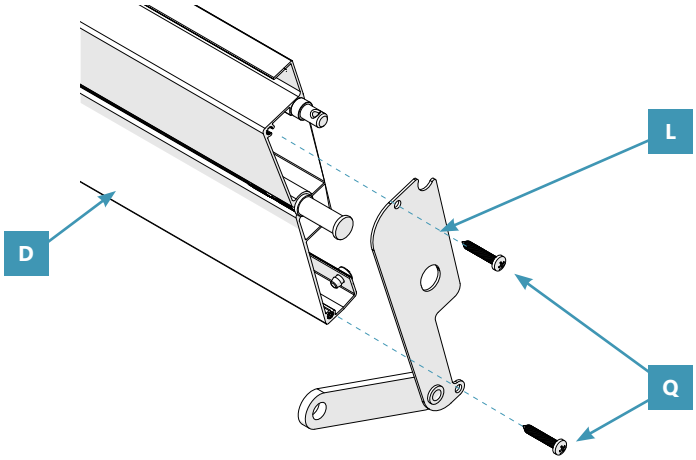

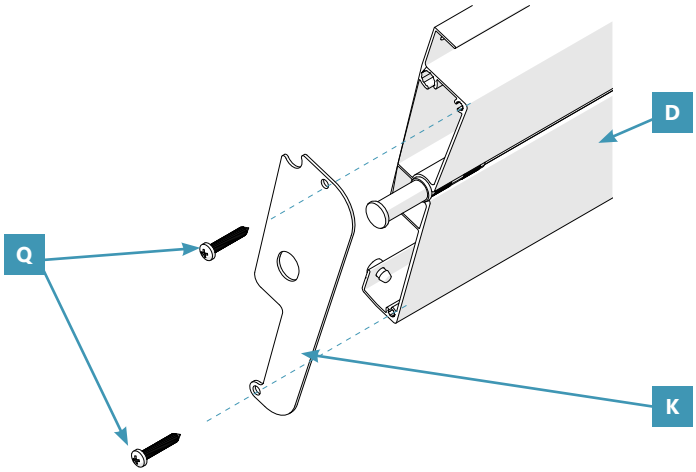

L x 1

K x 1

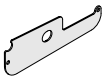

Q x 4

D x 1

8B

Prepare the regular louvers: attach the louver end caps **K** to each end of the rest of the louvers **D** with two screws **Q** using a cordless screwdriver. Repeat this step for all louvers.

	3x3m	3x3.6m 3.6x3.6m	3x4m 3.6x4m
K	36	44	48
Q	72	88	96
D	18	22	24

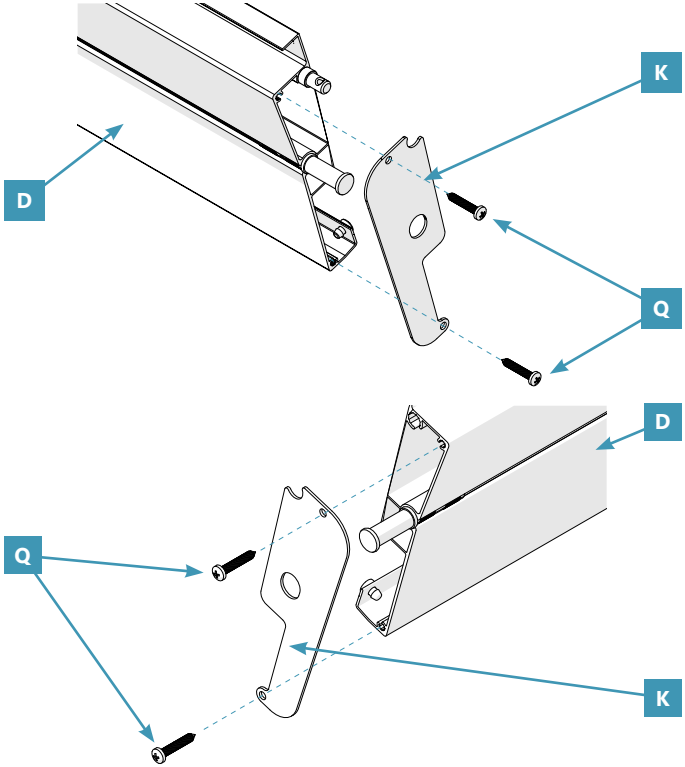

8C

Place the louvers **D** on the corresponding louver shaft support on both side beams (**B1** & **B2**), with each louver overlapping the next, and **make sure that the driving louver is placed 4th from the left**.

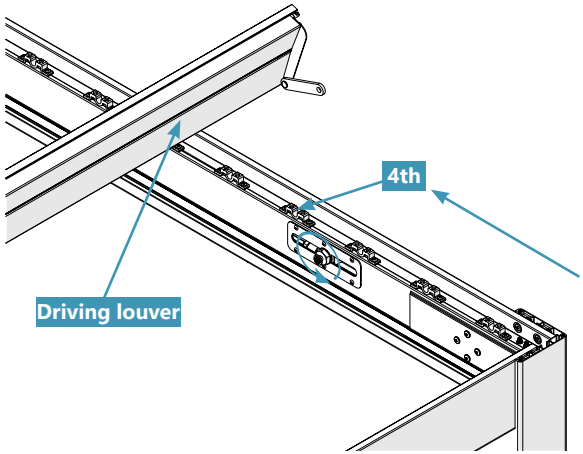

8D

Loosen the screw and washer already attached to the beam with motor. Then fix the connecting rod **L** of the driving louver to the side beam with motor **B1**, by firmly tightening the same screw and washer, using the hexagon socket key **X**.

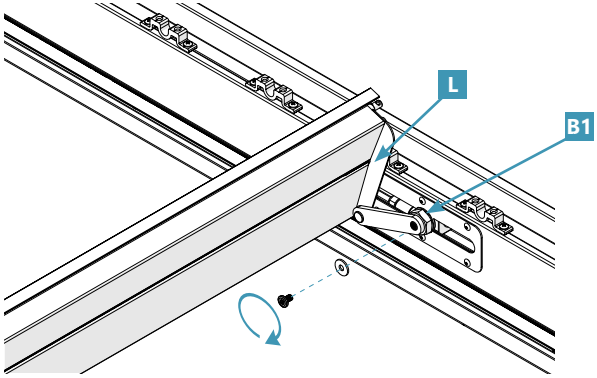

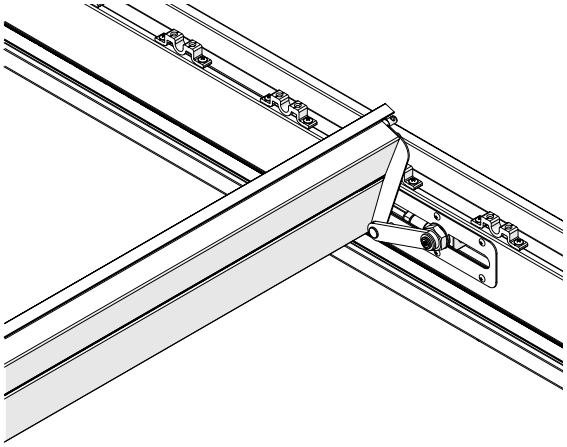

X x 1

8E

Secure the louvers **D** in the shaft support brackets by fixing a shaft support cover **M** onto the shaft support brackets on both ends of each louver **D**. Use two screws **P** each and secure them with a cordless screwdriver. Repeat this step for all louvers.

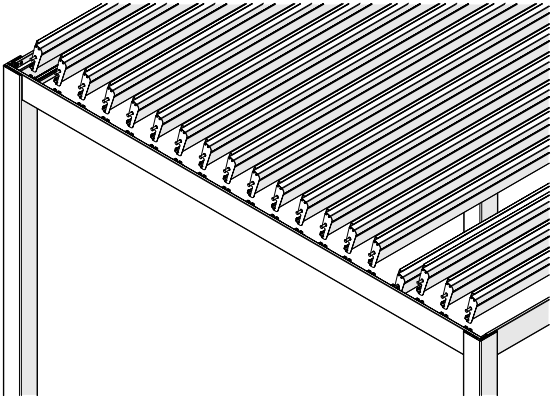

	3x3m	3x3.6m 3.6x3.6m	3x4m 3.6x4m
M	38	46	50
P	76	92	100

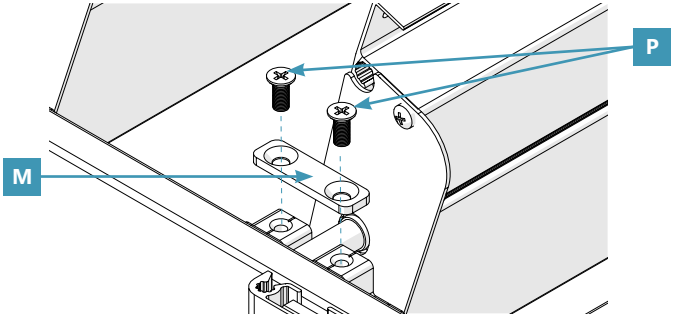

8F

Take the connecting strip G. Attach it to each louver fitting each of the holes onto the corresponding bolts of the louvers. Secure every bolt with a cotter pin S, inserting it through the small bolt hole. Repeat this step for all cotter pins.

Reminder:
For the single louver model, the connecting strips are on both sides.

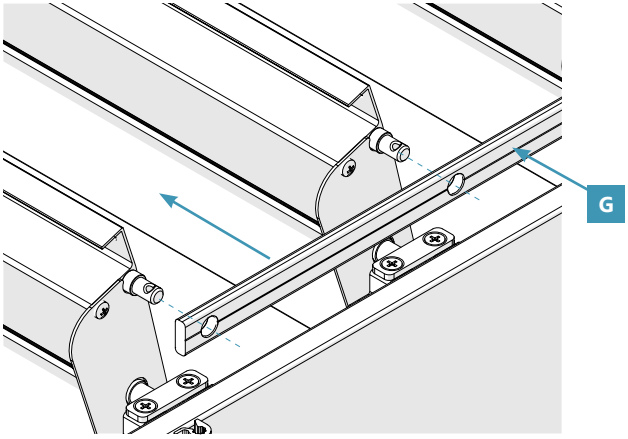

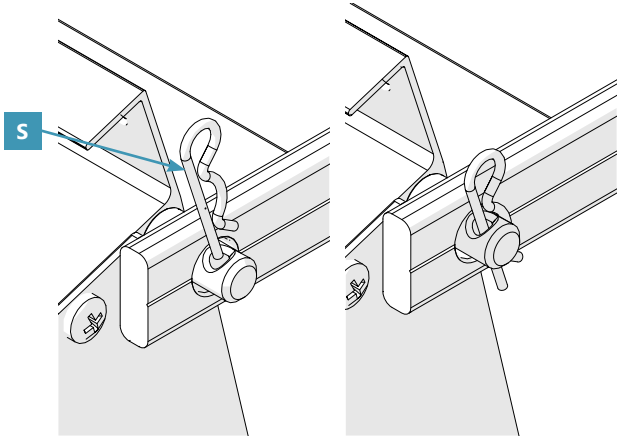

	3x3m	3x3.6m 3.6x3.6m	3x4m 3.6x4m
G	1	1	1
S	19	23	25

9. Finalize the electric connection and install the pillar cover

9A

Install the 2.4G and 4G antenna Z7 , and make sure they correspond to the label on the side beam with motor B1 .

Z7 x 1

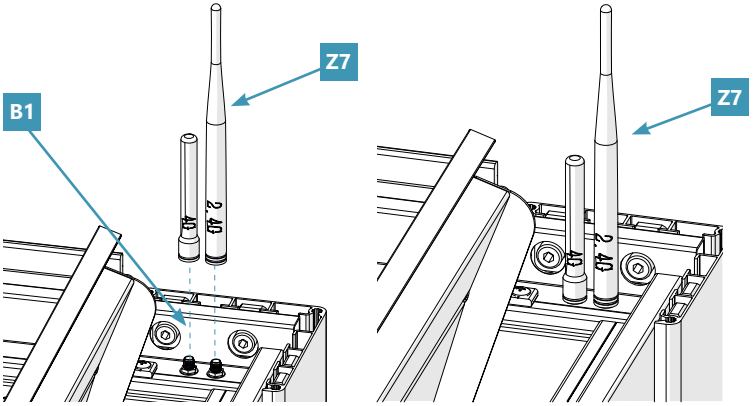

9B

To install the pillar cover, fix a pillar cover N to the top of each corner with three screws each R . Fix them using a cordless screwdriver.

N x 4

R x 12

Tip:
Check the frame alignment and pillar distances again by repeating 7A - 7D if necessary.

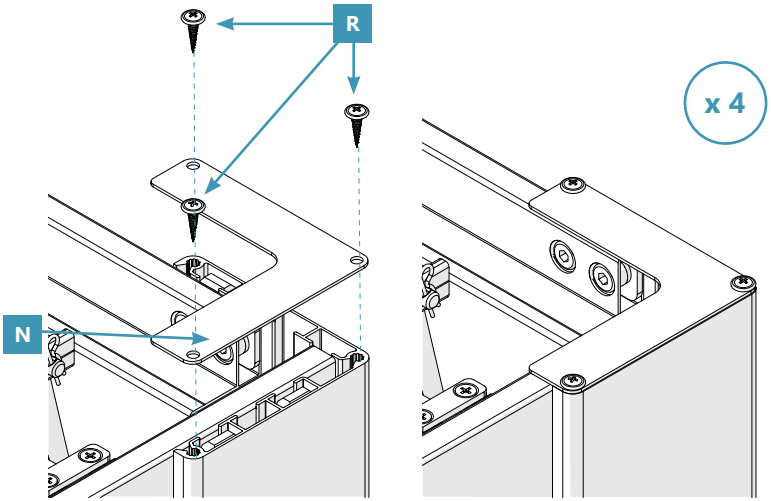

9C

Connect the cable on the base of the cabled corner pillar A2 to the cable of the power supply adapter Z4 . Tighten firmly.

Z4 x 1

Z8 x 1

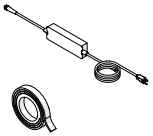

Tip:
It is recommended to wrap waterproof adhesive tape on the waterproof connectors to prolong their service life.

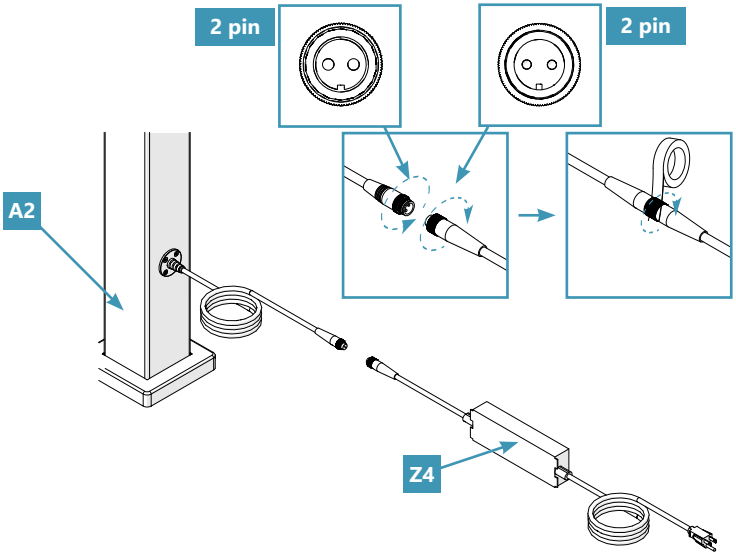

10. Pair the remote control

10A

Insert the AAA batteries into the remote control Z6 .

Z6 x 1

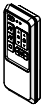

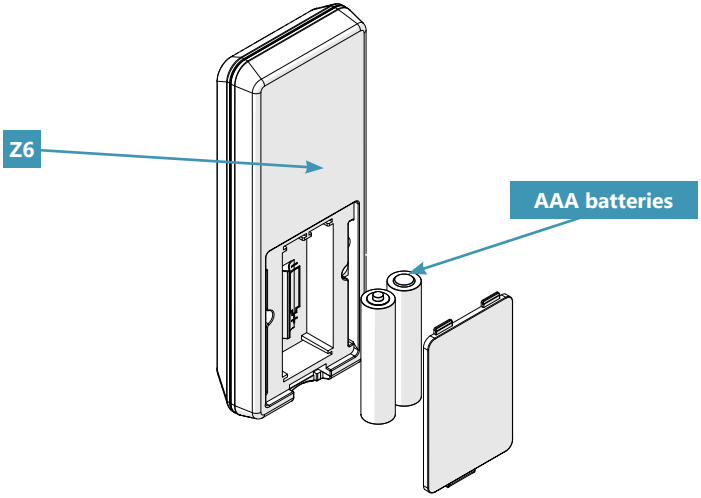

10B

Plug the power supply adapter Z4 into the mains.

Warning:
This product has a polarized plug (one blade is wider than the other) as a feature to reduce the risk of electric shock. This plug will fit in a polarized outlet only one way. If the plug does not fit fully in the outlet, reverse the plug. If it still does not fit, contact a qualified electrician. Do not use with an extension cord unless plug can be fully inserted. Do not alter or replace the plug. This item may be omitted if the product does not employ a polarized plug.

Z4 x 1

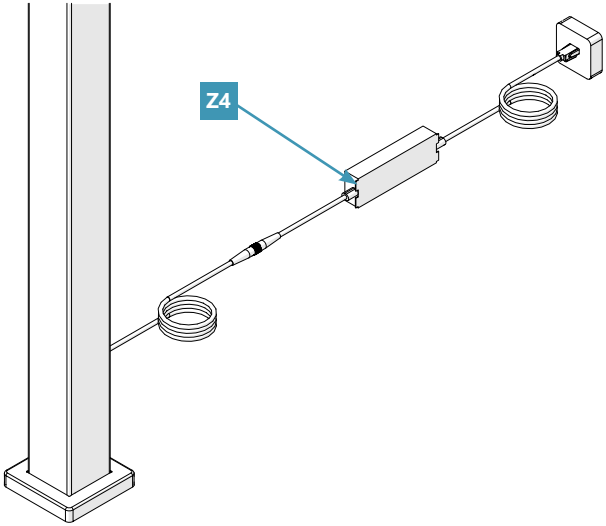

10C

Within 5 minutes, press and hold both 4 and 5 to pair the remote control Z6 .

Z6 x 1

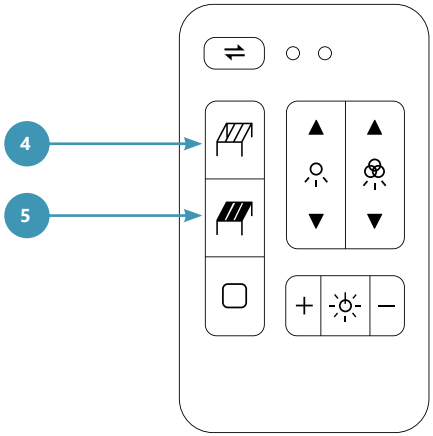

Within the first 5 minutes of the gazebo being powered on, press and hold both open 1 and close 2 buttons for 3 seconds to pair the remote control with the gazebo. The LED light will then blink twice to indicate that the device has been successfully paired.
For full remote control instructions, please see **Light strip remote control guide**.

11. Secure the corner pillars to the ground

The pergola must be firmly and permanently secured to the ground. If the ground is not level or suitable, please refer to the section "Before assembling your pergola".

11A

To fix the corner pillars (A & A2) with the four foot plates J , drill through each hole with a hammer drill.

J x 4

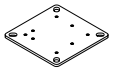

Z x 1

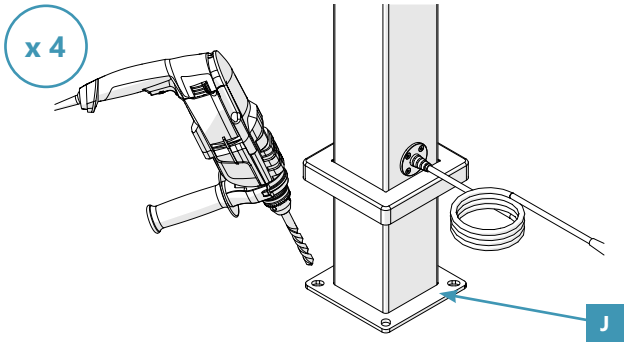

11B

Remove all the debris and dirt. Then firmly insert an anchor bolt W into each hole, using a hammer.

W x 16

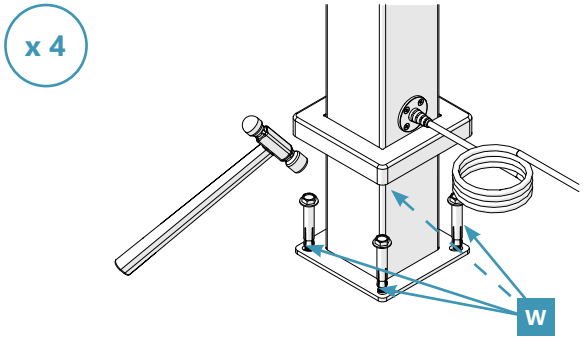

10A

Tighten the hexagonal ends of each bolt with a spanner/wrench.

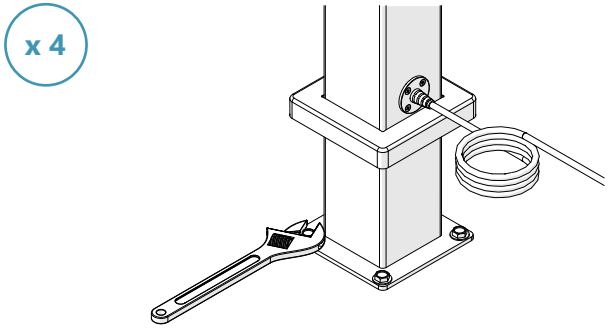

12. End of installation

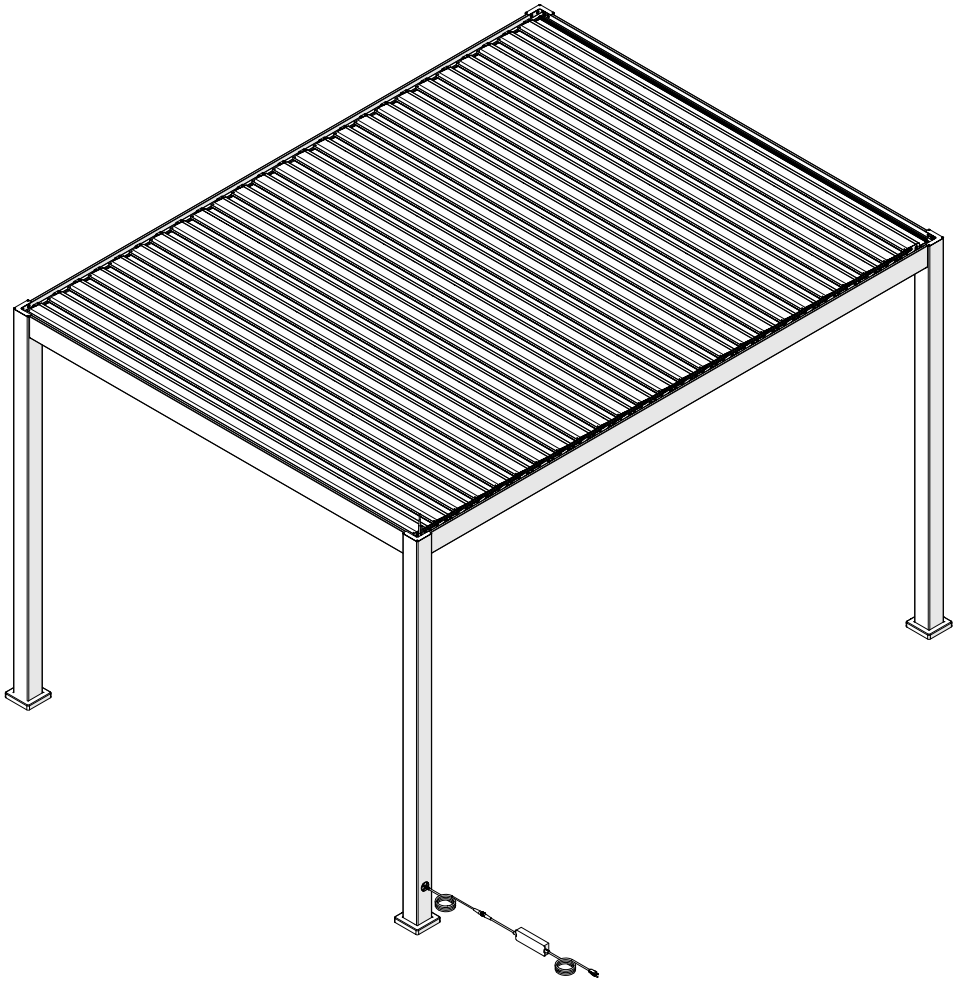

OPERATION OF YOUR MIRADOR PERGOLA

How to use the remote control

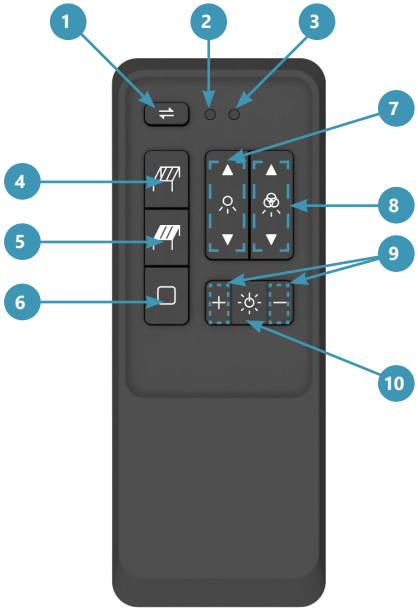

How to connect the product with your phone

I. Download the Mirador app from Google Play Store or App Store by scanning the QR code below

II. Open the Mirador app and scan the QR code on the nameplate on the beam to pair the pergola

Available on the App Store

GET IT ON Google Play

Please refer to the problem solving section on page 35 if you run into any issues.

Pairing

I. Insert 2 AAA batteries into the remote control

II. Plug the power adapter of the pergola into a socket

III. Within the first 5 minutes of the pergola being powered on, press and hold both open 4 and close 5 buttons for 3 seconds to pair the remote control with the pergola. (Once paired, all louvers will move back and forth once to indicate success.)

Operating

1 Toggle to control actuactor 1, actuactor 2 or both actuactors

2 Led indicator for actuactor 1

3 Led indicator for actuactor 2

4 Open louvers

5 Close louvers

6 Stop louver movement

7 Single color mode: Toggle light colors

8 Dynamic lighting mode: Toggle chasing effects

9 Adjust brightness (Only works for single color mode)

10 Turn on/off lights

Notice

If you own a single pergola instead of a dual-pergola set, make sure only led indicator 2 is on.
If you have problem paring or controlling the pergola

- Stand closer to the pergola
- Make sure to point the remote control directly at the pergola
- Make sure batteries are not worn out and that they are inserted correctly
- Try pairing again the remote control by unplug the pergola first and follow the pairing steps

Warning

Non-rechargeable batteries are not to be recharged.
Different types of batteries are not to be mixed.
New and used batteries are not to be mixed.
Batteries are to be inserted with the correct polarity.
Exhausted batteries are to be removed from the appliance and safely disposed of.
If the appliance is to be stored unused for a long period, the batteries should be removed.
The supply terminals are not to be short-circuited.

PROBLEM SOLVING, CARE & MAINTENANCE

Issue	Explanation or action to take
The LED light strip is deformed after removing it from the packaging.	Expand the light strip and leave it at room temperature for a period of time until its shape is restored before installing it.
The surface of the LED light strip oxidizes and changes color after long-term use.	Regularly clean the surface to ensure cleanliness. If necessary, order a replacement light strip.
Abnormal noise occurs during the rotation of the louver(s).	Check if any of the louvers are deformed. If this is the case, replace them. If the louvers are not deformed but they are colliding with one another, replace the beam.
The remote control cannot be paired with the control system.	Check if the product is powered on. Check if the remote control battery is installed or if the battery is depleted. Remove the rear cover of the remote control and check if the positive and negative poles of the battery are correct. Remove the battery and reinstall it to avoid poor contact. (The details can be reviewed in the Page34) If the problem still persists, please contact customer service.
The remote control can be paired with the control system, but the app cannot.	It may take a few minutes for the device to search for the network. Please enter the network configuration diagnostic mode. Then wait patiently and confirm that the light strip flashes blue before attempting to scan the code for pairing. If there are still problems, please contact point of sale.
The LED light strip operates normally, but the liner actuator does not.	Replace the beam with motor.
During operation, the product takes time to respond, or the app does not operate in real-time.	Check the local network signal strength.
The product is a dual-pergola, and the louvers on both sides do not open or close synchronously.	Slight asynchronization is normal. If it differs by more than 1 second, please refer to the contact section on page 38.

Issue	Explanation or action to take
Some of the light beads on the LED light strip do not work according to the instructions.	Replace the light strip.
The flatness of the louver is damaged due to weather conditions.	Replace the affected louvers.
The louvers cannot be reset when there is a power failure.	Remove the screws on the driver, take out the driver connected to the screws, and allow the louvers to reset automatically.
The drain is blocked by leaves or debris.	Clean the ducts and guttering of the pergola regularly.
The casting powder on the beam surface falls off after the motor runs for long periods.	No intervention is needed under normal circumstances.
How do I enter the network configuration diagnostic mode?	Connect the device to the mains and ensure that the light strip is turned off. Then, simultaneously press and hold the increase brightness [+] and decrease brightness [-] keys. The light strip in the device's corner will blink in different colors to indicate the current network status.
	● SIM card not detected ● Searching for Service ● Registered Successfully ● IP Obtained ● Connected to the Cloud ○ SIM Card Registration Denied

General Care & Maintenance

Dust and dirt will collect on the pergola and will require periodic cleaning	Use a water/detergent mixture and a soft clean cloth to clean the pergola.	Air dry or wipe with a soft clean cloth	Do not operate the awning when maintenance, such as window cleaning, is being carried out in the vicinity.
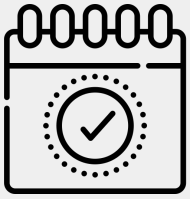			

For more soiled areas, rinse the surface with clean water from top to bottom.	In most situations it is not necessary to lubricate the moving parts of the pergola. However, when squeaking occurs, using a silicone spray lubricant is recommended.	Do not use any petroleum based spray lubricant.	Disconnect the awning from the supply when maintenance, such as window cleaning, is being carried out in the vicinity.
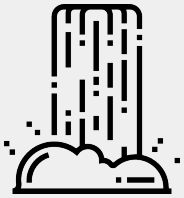	Silicone based	Petroleum based	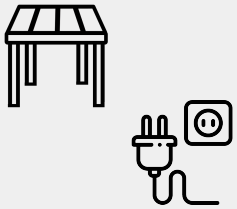

In coastal areas, it is recommended that you frequently spray the pergola with water to reduce accumulation of salt and dirt.	Disconnect the cables if the pergola is not being used for long periods.	When the temperature is below 0°C/32°F , it is recommended to use the product less frequently to prolong the product's service life.	The drive shall be disconnected from its power source during cleaning, maintenance and when replacing parts.
	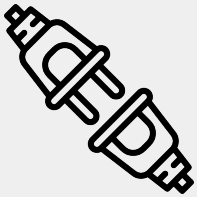	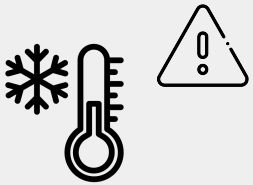 < 0°C / 32°F	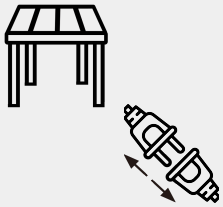

Periodic inspection

Frequently examine the installation for imbalance and signs of wear ordamage to cables and springs. Do not use if repair or adjustment isnecessary.

- Check the pergola is fixed firmly to the ground.
- Check the pergola's mobile components are in good working order,
- Check that the driving parts are sufficiently lubricated,
- Check the condition of the electrical cables and inspect their mains connection.
- Check the operation of the motor's limit switch and correct where necessary.
- Check the screws and rivet joints on the pergola.
- Check of the condition of mobile roof and bearings.

WARRANTY & COMPLAINTS PROCEDURE

For terms and conditions of our limited warranty, please visit www.miradoroutdoor.com or contact your local Mirador sales representative.

Complaints procedure:

- The complaint must include an order number or transaction number. Goods without an order number or transaction number are not covered under the warranty.
- The complaint must include a detailed description of the defect, the name of the company which installed the product and the date when the defect was discovered.
- At Sorara outdoor Living USA's discretion, customer must offer supplier the photos/videos of the issue/damaged parts. Otherwise, supplier reserves the right to refuse replacement parts or credit.
- Please save a copy of your purchase receipt.

Contact:

USA: support@miradoroutdoor.com
1-800-867-9018（from Mon-Fri 8:30AM-4:30 PM PST）
Other areas: Please contact the point of sale

DISASSEMBLY AND DISPOSAL OF THE PRODUCT

Incorrect disassembly of the pergola may lead to serious injury and product damage.

Disassembly should be assigned to qualified personnel with adequate training within the scope of occupational health and safety and knowledge within the scope of recycling.

Disposal of used Electrical and Electronic Equipment

When the service life of the product is over, it is necessary to disassemble it for disposal and to sort the individual materials and components in compliance with the local regulations of your country.

Important disposal information

In compliance with European Directive 2012/19EU on waste electrical and electronic equipment (WEEE) is it forbidden to place the waste equipment marked with the crossed bin symbol with other waste to a container intended for domestic waste. Users wishing to dispose of electronic or electrical equipment are obliged to return it to a designated waste equipment collection point.

The above statutory obligations were introduced in order to limit the amount of waste generated from waste electrical and electronic equipment, and to ensure an appropriate level of collection, recovery and recycling. The equipment does not contain hazardous components which have a particularly adverse effect on the environment or human health.

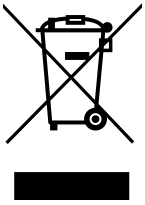

Utilization of used batteries

In compliance with the provisions of the Directive 2006/66/EC of the European Parliament and of the Council of 6 September 2006 on batteries and accumulators and waste batteries and accumulators and repealing Directive 91/157/EEC, the End User is obliged to transfer used portable batteries, which are no longer used as a source of energy, to an official collection point. It is forbidden to place used batteries with other waste in the same container. To prevent environmental pollution and causing a possible hazard for human and animal health, used batteries should be disposed of in the correct container at the designated collection points.

CERTIFICATION INFORMATION

- Declaration of performance (DOP) → 41
- EU Declaration of Conformity → 42
- EC Declaration of Conformity → 43
- UK Declaration of Conformity → 44
- ETL → 45
- FCC → 46

Declaration of performance (DOP)

Reference no. DOP0001

Product name and type
Mirador Pergola and Mirador Wall Pergola/ pergola awning

Model name/ Unique identification code of the product:
111 Deluxe AxBm, 111 Deluxe e AxBm, 111 Deluxe e-Motion RC AxBm, 111 Deluxe e-Motion AxBm,
111 DA AxBm, 111 LED DA AxBm, 111 e-Motion DA AxBm, 111 e-Motion+ AxBm,
111 Deluxe Edge AxBm, 111 Deluxe Edge e AxBm, 111 Deluxe Edge e-Motion RC AxBm, 111 Deluxe Edge e-Motion AxBm, 111 Deluxe R AxBm, 111 Deluxe R e AxBm, 111 Deluxe R e-Motion RC AxBm, 111 Deluxe R e-Motion AxBm,
AxB:
3x3, 3x3.6, 3x4, 3.6x3.6, 3.6x4,
3x5.3, 3x6, 3x7.2, 3.6x5.3, 3.6x6, 3.6x7.2

111 Classic AxBm, 111 Classic e AxBm, 111 Classic e-Motion AxBm, 111 S AxBm, 111 LED S AxBm, 111 e-Motion S AxBm,
111 Premium AxBm, 111 Premium e AxBm, 111 Premium e-Motion AxBm, 111 A AxBm, 111 LED A AxBm, 111 e-Motion A AxBm,
AxB:
3x3, 3x3.6, 3x4,
3x5.3, 3x6, 3x7.2

111 Infinite AxBm, 111 Infinite e AxBm, 111 Infinite e-Motion RC AxBm, 111 Infinite e-Motion AxBm,
111 Infinite LED AxBm, 111 Infinite e-Motion DA AxBm, 111 Infinite e-Motion+ AxBm,
111 Infinite Edge AxBm, 111 Infinite Edge e AxBm, 111 Infinite Edge e-Motion RC AxBm, 111 Infinite e-Motion AxBm,
AxB:
3x3, 3x3.6, 3x4, 3x5.3, 3x6, 3x7.2,
3.6x3.6, 3.6x4, 3.6x5.3, 3.6x6, 3.6x7.2, 7.2x7.2

Purpose of Usage:
External use in buildings and other construction works

Manufacturer:
Zhejiang Zhengte Co., Ltd.
811 Dongfang Ave, Zhejiang, PRC

Documentation officer:
Stefan Baricik
Sorara Outdoor Living B.V.
Cockeveld 3, 5672 AE Nuenen, The Netherlands

System for assessing and verifying the constancy of performance according to Annex V of the Construction Products Directive 305/2011/EC
System 4

Declared performance (Excluding the structural part):
Wind resistance = Class 6
Standard: EN 13561:2004+A1:2008

Zhejiang
20.07.23

(Chairman/President)

EU Declaration of Conformity

Product name
Mirador Pergola

Model name/ Unique identification code of the product:
111 Deluxe e-Motion RC 3x7.2m, 111 Deluxe e-Motion RC 3.6x3.6m, 111 Deluxe e-Motion RC 3.6x4m,
111 Deluxe e-Motion RC 3.6x5.3m, 111 Deluxe e-Motion RC 3.6x6m, 111 Deluxe e-Motion RC 3.6x7.2m
111 Deluxe e-Motion 3x3m, 111 Deluxe e-Motion 3x3.6m, 111 Deluxe e-Motion 3x4m, 111 Deluxe e-Motion 3x5.3m,
111 Deluxe e-Motion 3x6m, 111 Deluxe e-Motion 3x7.2m, 111 Deluxe e-Motion 3.6x3.6m, 111 Deluxe e-Motion 3.6x4m,
111 Deluxe e-Motion 3.6x5.3m, 111 Deluxe e-Motion 3.6x6m, 111 Deluxe e-Motion 3.6x7.2m, 111 Deluxe Edge e-Motion 3x3m,
111 Deluxe Edge e-Motion 3x3.6m, 111 Deluxe Edge e-Motion 3x4m, 111 Deluxe Edge e-Motion 3x5.3m,
111 Deluxe Edge e-Motion 3x6m, 111 Deluxe Edge e-Motion 3x7.2m, 111 Deluxe Edge e-Motion 3.6x3.6m,
111 Deluxe Edge e-Motion 3.6x4m, 111 Deluxe Edge e-Motion 3.6x5.3m, 111 Deluxe Edge e-Motion 3.6x6m,
111 Deluxe Edge e-Motion 3.6x7.2m, 111 Deluxe R e-Motion 3x3m, 111 Deluxe R e-Motion 3x3.6m, 111 Deluxe R e-Motion 3x4m,
111 Deluxe R e-Motion 3x5.3m, 111 Deluxe R e-Motion 3x6m, 111 Deluxe R e-Motion 3x7.2m, 111 Deluxe R e-Motion 3.6x3.6m,
111 Deluxe R e-Motion 3.6x4m, 111 Deluxe R e-Motion 3.6x5.3m, 111 Deluxe R e-Motion 3.6x6m, 111 Deluxe R e-Motion 3.6x7.2m
111 Infinite e-Motion 3x3m, 111 Infinite e-Motion 3x3.6m, 111 Infinite e-Motion 3x4m, 111 Infinite e-Motion 3x5.3m,
111 Infinite e-Motion 3x6m, 111 Infinite e-Motion 3x7.2m, 111 Infinite e-Motion 3.6x3.6m, 111 Infinite e-Motion 3.6x4m,
111 Infinite e-Motion 3.6x5.3m, 111 Infinite e-Motion 3.6x6m, 111 Infinite e-Motion 3.6x7.2m, 111 Infinite Edge e-Motion 3x3m,
111 Infinite Edge e-Motion 3x3.6m, 111 Infinite Edge e-Motion 3x4m, 111 Infinite Edge e-Motion 3x5.3m,
111 Infinite Edge e-Motion 3x6m, 111 Infinite Edge e-Motion 3x7.2m, 111 Infinite Edge e-Motion 3.6x3.6m,
111 Infinite Edge e-Motion 3.6x4m, 111 Infinite Edge e-Motion 3.6x5.3m, 111 Infinite Edge e-Motion 3.6x6m, 111 Infinite Edge e-Motion 3.6x7.2m
111 Classic e-Motion 3x3m, 111 Classic e-Motion 3x3.6m, 111 Classic e-Motion 3x4m, 111 Classic e-Motion 3x5.3m,
111 Classic e-Motion 3x6m, 111 Classic e-Motion 3x7.2m
Software: ZTC1_EU_M2_Boot_Main
Accessories: Remote control, 3V DC Battery

Purpose of Usage:
External use in buildings and other construction works

Manufacturer:
Zhejiang Zhengte Co., Ltd.
No. 588 Linhai Ave., 317000 Linhai, Zhejiang, PRC

Documentation officer:
Stefan Baricik
Sorara Outdoor Living B.V.
Cockeveld 3, 5672 AE Nuenen, The Netherlands

Meets the provisions of Machinery Directive 2006/42/EC
Harmonised standards used:
EN 13561:2015, EN 60335-1:2012+A11:2014+A13:2017+A1:2019 + A14:2019 +A2:2019+A15:2021,
EN 60335-2-97:2006+A11:2008+ A2:2010+ A12:2015, EN 62233:2008, EN IEC 55014-1:2021,
EN IEC 55014-2:2021 EN IEC 55015:2019/A11:2020, EN 61547:2009, EN IEC 61000-3-2:2019/A1:2021,
EN 61000-3-3:2013/A2:2021, EN 301 489-1 V2.2.3:2019, EN 301 489-3 V2.3.2:2023, EN 301 489-52 V1.2.1:2021,
EN 300 440 V2.1.1, EN 300 440 V2.2.1, EN 301 908-1 V15.1.1, EN 301 908-13 V13.2.1,
EN 50663:2017, EN 62311:2008, EN 50665:2017

Notified Body: TÜV SÜD Danmark ApS
NB No.: 2443
Certificate No.: DK-RED002818 i01, DK-RED002821 i01

Zhejiang
28.09.23

(Chairman/President)

EC Declaration of Conformity

Product name and type
Mirador Pergola and Mirador Wall Pergola/ pergola awning

Model name/ Unique identification code of the product:
111 Deluxe AxBm, 111 Deluxe e AxBm, 111 Deluxe e-Motion RC AxBm, 111 Deluxe e-Motion AxBm
111 Deluxe Edge AxBm, 111 Deluxe Edge e AxBm, 111 Deluxe Edge e-Motion RC AxBm, 111 Deluxe Edge e-Motion AxBm
111 Deluxe R AxBm, 111 Deluxe R e AxBm, 111 Deluxe R e-Motion RC AxBm, 111 Deluxe R e-Motion AxBm
AxB:
3x3, 3x3.6, 3x4, 3.6x3.6, 3.6x4,
3x5.3, 3x6, 3x7.2, 3.6x5.3, 3.6x6, 3.6x7.2

111 Classic AxBm, 111 Classic e AxBm, 111 Classic e-Motion AxBm
111 Premium AxBm, 111 Premium e AxBm, 111 Premium e-Motion AxBm,
AxB:
3x3, 3x3.6, 3x4,
3x5.3, 3x6, 3x7.2

111 Infinite AxBm, 111 Infinite e AxBm, 111 Infinite e-Motion RC AxBm, 111 Infinite e-Motion AxBm
AxB:
3.6x3.6, 7.2x7.2

Purpose of Usage:
External use in buildings and other construction works

Manufacturer:
Zhejiang Zhengte Co., Ltd.
811 Dongfang Ave, Zhejiang (China)

Documentation officer:
Stefan Baricik
Sorara Outdoor Living B.V.
Cockeveld 3, 5672 AE Nuenen (The Netherlands)

Meets the provisions of Machinery Directive 2006/42/EC

Harmonised standards used:
EN 13561:2015
EN 60335-1:2012+A11:2014+A13:2017+A1:2019 + A14:2019 +A2:2019+A15:2021
EN 60335-2-97:2006+A11:2008+ A2:2010+ A12:2015
EN 62233:2008

Zhejiang
20.07.23

(Chairman/President)

UK Declaration of Conformity

Product name and type
Mirador Pergola

Model name/ Unique identification code of the product:
111 Deluxe AxBm, 111 Deluxe e AxBm, 111 Deluxe e-Motion RC AxBm, 111 Deluxe e-Motion AxBm
111 Deluxe Edge AxBm, 111 Deluxe Edge e AxBm, 111 Deluxe Edge e-Motion RC AxBm, 111 Deluxe Edge e-Motion AxBm
111 Deluxe R AxBm, 111 Deluxe R e AxBm, 111 Deluxe R e-Motion RC AxBm, 111 Deluxe R e-Motion AxBm
AxB:
3x3, 3x3.6, 3x4, 3.6x3.6, 3.6x4,
3x5.3, 3x6, 3x7.2, 3.6x5.3, 3.6x6, 3.6x7.2

111 Classic AxBm, 111 Classic e AxBm, 111 Classic e-Motion AxBm
111 Premium AxBm, 111 Premium e AxBm, 111 Premium e-Motion AxBm,
AxB:
3x3, 3x3.6, 3x4,
3x5.3, 3x6, 3x7.2

111 Infinite AxBm, 111 Infinite e AxBm, 111 Infinite e-Motion RC AxBm, 111 Infinite e-Motion AxBm
AxB:
3.6x3.6, 7.2x7.2

Purpose of Usage:
External use in buildings and other construction works

Manufacturer:
Zhejiang Zhengte Co., Ltd.
811 Dongfang Ave, Zhejiang (China)

Documentation officer:
Stefan Baricik
Sorara Outdoor Living B.V.
Cockeveld 3, 5672 AE Nuenen (The Netherlands)

Meets the provisions of Supply of Machinery (Safety) Regulations 2008 (No. 1597)
Harmonised standards used:
EN 13561:2015
EN 60335-1:2012
EN 60335-1:2012/AC:2014
EN 60335-1:2012/A11:2014
EN 60335-1:2012/A13:2017
EN 60335-1:2012/A15:2021
EN 60335-2-97:2006
EN 60335-2-97:2006/A12:2015

Zhejiang
20.07.23

(Chairman/President)

CERTIFICATION INFORMATION

ETL LISTED MARK

C ETL LISTED US

Intertek
5026666

Conforms to the standard Door, Drapery, Gate, Louver, and Window Operators and Systems
[ANSI/CAN/UL 325:2017 Ed.7+R:28Feb2020]

ETL is a Certification Program provided by Intertek, which is a Recognized Testing Laboratory (NRTL) in the United States, and is accredited by institutes and associations such as ANSI, A2LA, and UKAS.
The Mirador 111 DA e-Motion+ is ETL certified in the United States of America under Control Number 5026666

FCC INFORMATION

Supplier's Declaration of Conformity Compliance Information

Unique Identifier	
Product Description	Electrical pergola
Model Number	111 DA e-Motion+
Trade Name	Mirador

FCC Compliance Statement
This device complies with part 15 of the FCC Rules. Operation is subject to the following two conditions: (1) This device may not cause harmful interference, and (2) this device must accept any interference received, including interference that may cause undesired operation.

Responsible Party - U.S. Contact Information	
Company:	Sorara Outdoor Living USA, Inc.
Address:	15271 Fairfield Ranch Rd. , Ste# 180, Chino Hills, CA 91709
Telephone or internet contact information:	1-800-867-9018 – Hello@Sorara.com

Warning: Any changes or modifications to this unit not expressly approved by the party responsible for compliance could void the user's authority to operate the equipment.

Note: This equipment has been tested and found to comply with the limits for a Class B digital device, pursuant to part 15 of the FCC Rules. These limits are designed to provide reasonable protection against harmful interference in a residential installation. This equipment generates uses and can radiate radio frequency energy and, if not installed and used in accordance with the instructions, may cause harmful interference to radio communications. However, there is no guarantee that interference will not occur in a particular installation. If this equipment does cause harmful interference to radio or television reception, which can be determined by turning the equipment off and on, the user is encouraged to try to correct the interference by one or more of the following measures:
—Reorient or relocate the receiving antenna.
—Increase the separation between the equipment and receiver.
—Connect the equipment into an outlet on a circuit different from that to which the receiver is connected.
—Consult the dealer or an experienced radio/TV technician for help.

For Pergola:
MPE Requirements
To satisfy FCC RF exposure requirements, a separation distance of 20 cm or more should be maintained between the antenna of this device and persons during device operation.
To ensure compliance, operations at closer than this distance is not recommended.

For remote control:
This equipment complies with FCC RF radiation exposure limits set forth for an uncontrolled environment. This device and its antenna must not be co-located or operating in conjunction with any other antenna or transmitter.

more to
enjoy

MIRADOR® is a registered trademark

Printed on 100%
post-consumer
recycled paper

FR

WWW.MIRADOROUTDOOR.COM