HeyGears

heygears.com info@heygears.com
Tel: +1 (318) 353-4295 (Global)/ +1 (949) 418-9418 (USA) / +44 148-396-8549 (EU)
USA-17931 Sky Park Circle, Suite E, Irvine, CA, 92614
CHN-Block B2, 501, 601, Enterprise Accelerator, Kaifa District, Guangzhou City

Follow us @HeyGears

Quickstart V1.0

HeyGears

Reflex

Personal Desktop 3D Printer

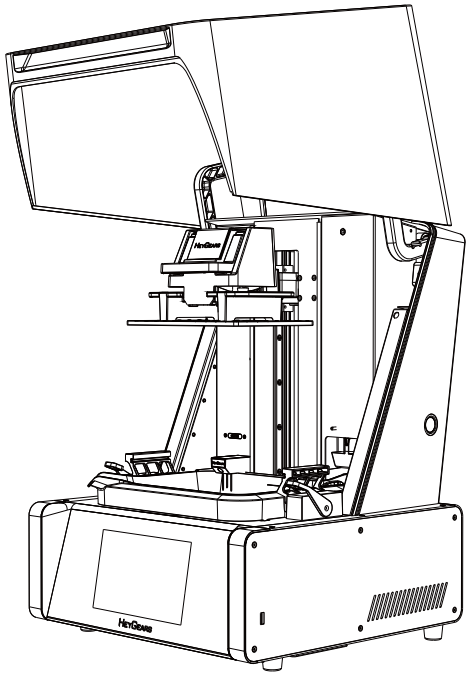

This quick start must be read and understood before operating the machine

Thank you for choosing HeyGears. **For safety, please contact HeyGears support staff for assistance regarding unpacking and installing the machine**. If you fail to comply with the instructions in this manual, HeyGears will not be liable for the consequential damages unless required by federal and local ordinances.

Please keep this operation manual properly for future reference. The pictures are for reference only and the products are subject to the actual product.

1 Items & Parameters

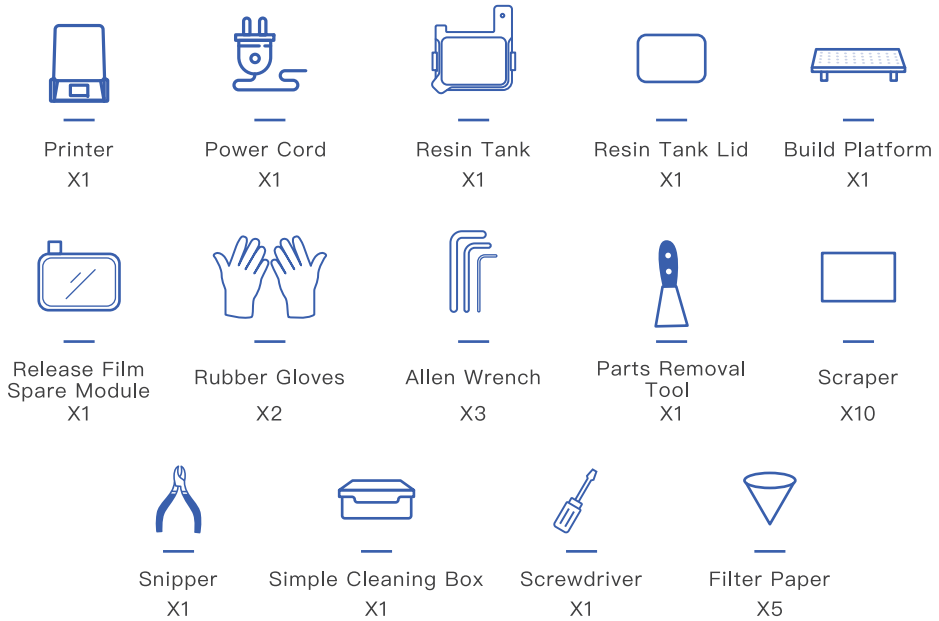

Name	UltraCraft Rapid Production System	Input	100–240 V~ 50/60 Hz
Model	UltraCraft Reflex	Weight	28 kg
Size	400*420*572 mm	Power	350 W

2 Components

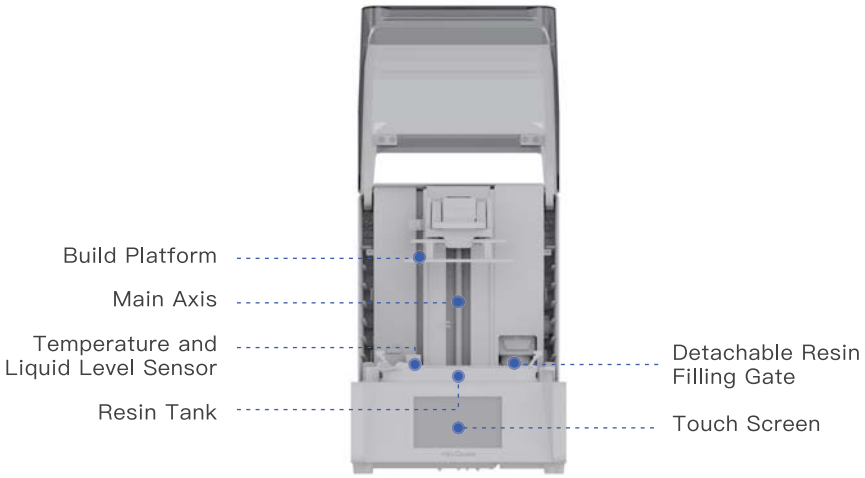

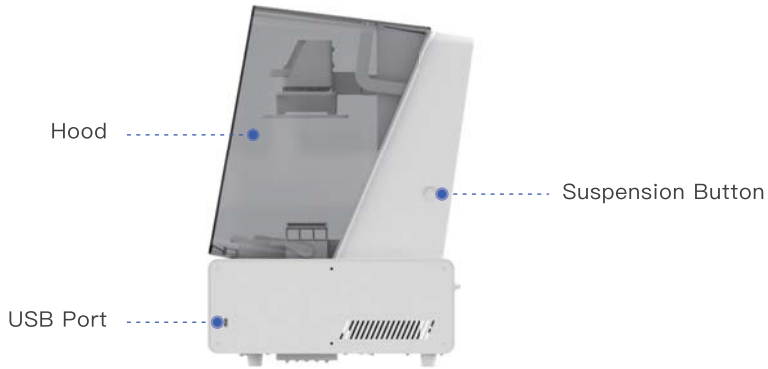

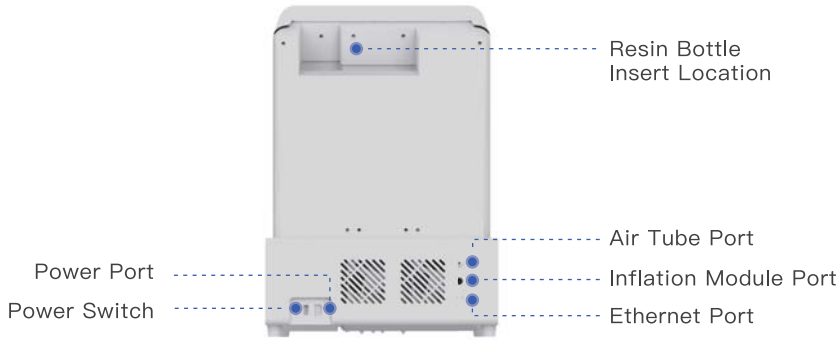

3 Installation Requirements

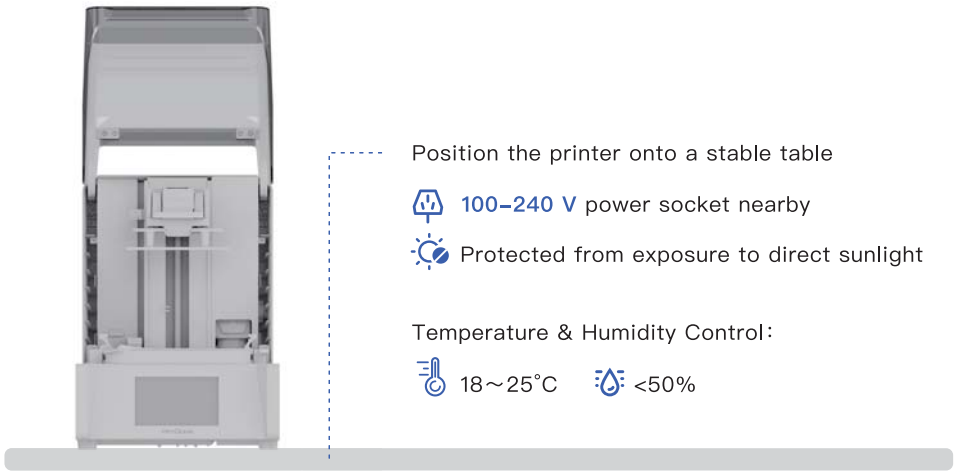

4 Operation Steps

STEP 1

Place the printer on a smooth horizontal surface, check the appearance of the printer to make sure it is in good condition, lift the hood to the highest position and remove the filler inside.

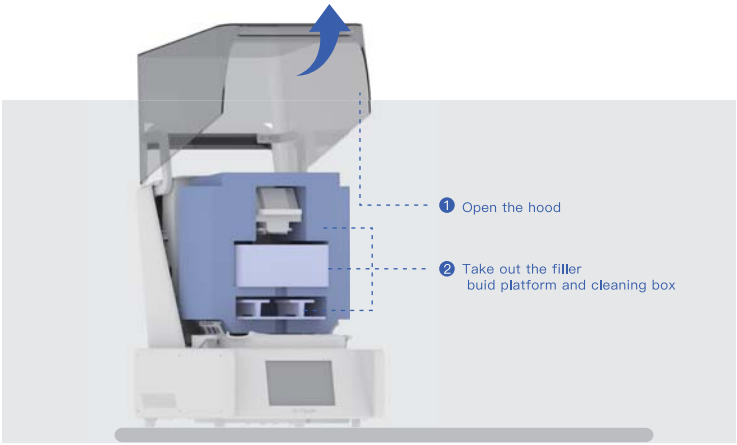

STEP 2

Connect the power supply as shown, and turn on the power switch, then the touch screen lights up to indicate that the power is successfully connected.

STEP 3

Click the button on the left navigation bar to enter the "Settings" interface.

Click the button in the function list to enter the "Connection" interface.

Go through the list of available Wi-Fi, click on which you want to connect to: if the Wi-Fi you choose does not require password verification, click Confirm and the printer will automatically connect to it. Otherwise, you need to type in the password at first connection time.

STEP 4

Remove the resin tank inside the printer, and check whether the outer foam and release film are complete or not. Tear off the dustproof film of the LCD screen and ensure that there is no dust and foreign matters on its surface.
After checking, hold its handles on both sides, aligning with the locking module on both sides, install it into the cabinet with the overhang part facing inward, then pull the locking handles forward. You can shake the resin tank slightly to ensure that it is locked.

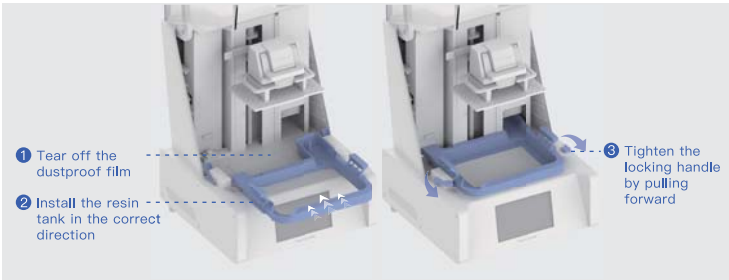

Take out the liquid & temperature sensor and install it in the resin tank as shown below. Make sure that the sensor is magnetically attracted to the resin tank, and the convex part at the end is inserted into the specified position, then you can shake it gently to make sure it is fitted well.

STEP 5

Take out the build platform in the package and keep the locking wrench raised, then install the build platform along the slide. Inset it to the bottom, lock down wrench and close the hood.

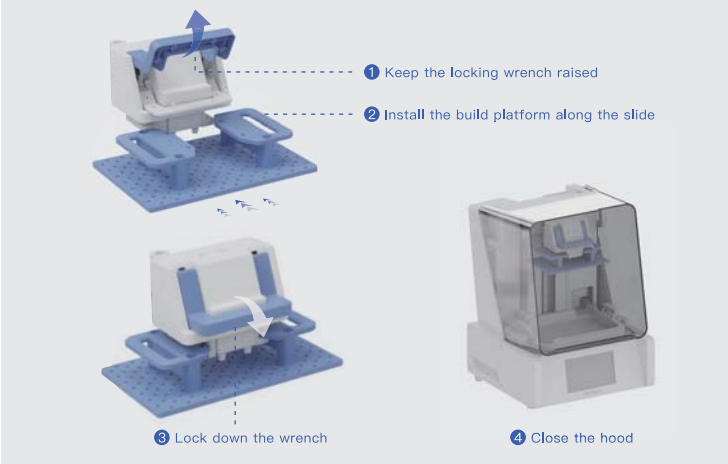

STEP 6

Fully shaken the bottle and open it, then unscrew the cap as shown. Insert the resin bottle downward along the slot into the printer, and lift the top cover of the printer if using a 2L resin bottle.
Insert the resin bottle until you get tactile feedback and the display shows that the resin bottle is inserted.

⚠ **CAUTION:** Once the resin bottle is inserted into the printer, the resin will flow into the resin tank, please make sure the resin inserted is correct.

STEP 7

Follow the Ultraflow guide to complete the device binding and pre-processing, and send the job to the printer for printing.

STEP 8

When printing finished, open the hood and unlock the build platform to take it out.
If you need to recover residual resin from the parts, hang the build platform on the main axis at an angle as shown until the resin no longer drips heavily.
After removing the platform, follow the instructions for the post-processing like washing, removing parts and supports, and post-curing etc.

5 Replace the release film

Resin tank and Release Film Spare Module are shown in the picture:

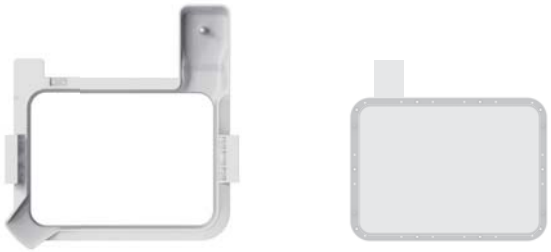

Replacement steps

STEP 1

In the idle status, gently pull the resin bottle up along the track and press the suspension button on the side of the printer, then release the bottle so that it is stuck in suspension. When the resin no longer drips naturally from the bottle, remove the bottle along the rail and press the suspension button again to return it to the original state.

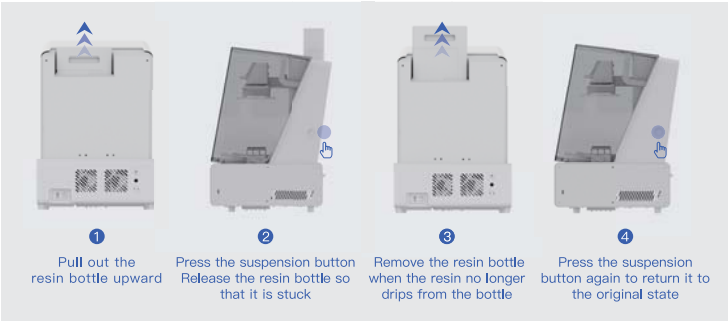

STEP 2

Remove the resin filling gate in the direction shown.

STEP 3

Remove the resin tank by pulling back the locking handle on both sides of it.

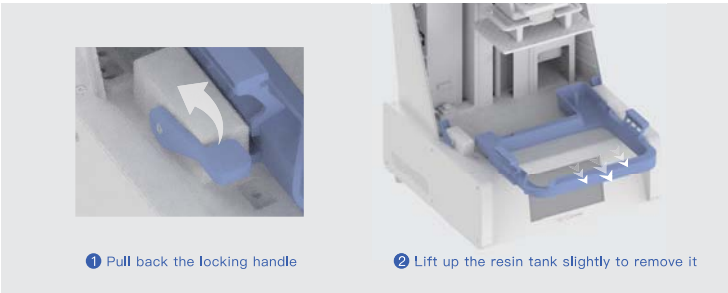

STEP 4

Use the attached wrench to remove the screws of the release film at the bottom of the resin tank. Take out the release film after all the screws are removed.

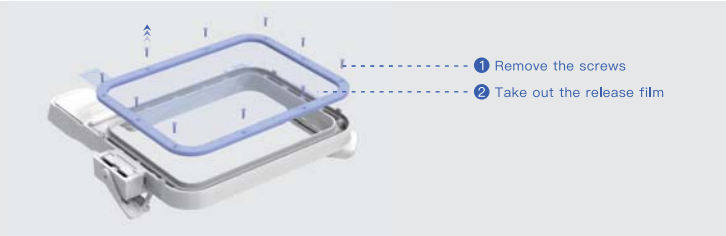

STEP 5

Install the new release film into the resin tank in the same position and re-lock the removed screws to the original holes. Reinstall the resin tank according to the guidelines.

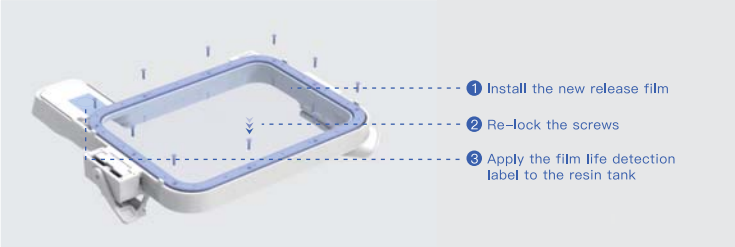

6 Cautions

01

Please close the hood in time after installing or removing the platform and resin tank to avoid dust entering the printing area.

02

Before removing the resin tank or resin bottle, please press down the suspension button to stuck the resin bottle and wait for several minutes until the resin stops drippong.

03

It is recommended to store the resin tank and release film spare module in a dust-proof place and keep the temperature between 20~25℃.

04

Please avoid contaminating the liquid level sensor power supply with resin.

05

Please clean the liquid level and temperature sensor probes when changing the material; Not to invert the sensor when the probes are covered with resin.

FCC Compliance Information Statement

Caution

Caution: The user is cautioned that changes or modifications not expressly approved by the party responsible for compliance could void the user's authority to operate the equipment.

This device complies with part 15 of the FCC Rules. Operation is subject to the following two conditions:

1. This device may not cause harmful interference, and
2. this device must accept any interference received, including interference that may cause undesired operation.

NOTE

This equipment has been tested and found to comply with the limits for a Class B digital device, pursuant to Part 15 of the FCC Rules. These limits are designed to provide reasonable protection against harmful interference in a residential installation. This equipment generates, uses and can radiate radio frequency energy and, if not installed and used in accordance with the instructions, may cause harmful interference to radio communications. However, there is no guarantee that interference will not occur in a particular installation.
If this equipment does cause harmful interference to radio or television reception, which can be determined by turning the equipment off and on, the user is encouraged to try to correct the interference by one or more of the following measures:
-- Reorient or relocate the receiving antenna.
-- Increase the separation between the equipment and receiver.
-- Connect the equipment into an outlet on a circuit different from that to which the receiver is connected.
-- Consult the dealer or an experienced radio/TV technician for help.

FCC Radiation Exposure Statement

This equipment complies with FCC radiation exposure limits set forth for an uncontrolled environment. This equipment should be installed and operated with a minimum distance of 20cm between the radiator and your body.
This transmitter must not be co-located or operating in conjunction with any other antenna or transmitter.

HeyGears