PKM8710ECF-C53-F20 Module

DATASHEET

Realtek Confidential for DL

Rev. 1.2

Sep. 27, 2024

REALSIL MICROELECTRONICS (Suzhou) CO. LTD.

No. 128, West Shenhu Road, Suzhou Industrial Park, Suzhou, Jiangsu Province, China

COPYRIGHT

©2022 Realsil Microelectronics (Suzhou) co. Ltd. All rights reserved. No part of this document may be reproduced, transmitted, transcribed, stored in a retrieval system, or translated into any language in any form or by any means without the written permission of Realsil Microelectronics (Suzhou) co. Ltd.

DISCLAIMER

Please Read Carefully:
Realsil Microelectronics (Suzhou) co. Ltd, (Realsil) reserves the right to make corrections, enhancements, improvements and other changes to its products and services. Buyers should obtain the latest relevant information before placing orders and should verify that such information is current and complete.
Reproduction of significant portions in Realsil data sheets is permissible only if reproduction is without alteration and is accompanied by all associated warranties, conditions, limitations, and notices. Realsil is not responsible or liable for such reproduced documentation. Information of third parties may be subject to additional restrictions.
Buyers and others who are developing systems that incorporate Realsil products (collectively, "Customers") understand and agree that Customers remain responsible for using their independent analysis, evaluation and judgment in designing their applications and that Customers have full and exclusive responsibility to assure the safety of Customers' applications and compliance of their applications (and of all Realsil products used in or for Customers' applications) with all applicable regulations, laws and other applicable requirements. Designer represents that, with respect to their applications, Customer has all the necessary expertise to create and implement safeguards that (1) anticipate dangerous consequences of failures, (2) monitor failures and their consequences, and (3) lessen the likelihood of failures that might cause harm and take appropriate actions. Customer agrees that prior to using or distributing any applications that include Realsil products, Customer will thoroughly test such applications and the functionality of such Realsil products as used in such applications.
Realsil's provision of technical, application or other design advice, quality characterization, reliability data or other services or information, including, but not limited to, reference designs and materials relating to evaluation kits, (collectively, "Resources") are intended to assist designers who are developing applications that incorporate Realsil products; by downloading, accessing or using Realsil's Resources in any way, Customer (individually or, if Customer is acting on behalf of a company, Customer's company) agrees to use any particular Realsil Resources solely for this purpose and subject to the terms of this Notice.
Realsil's provision of Realsil Resources does not expand or otherwise alter Realsil's applicable published warranties or warranty disclaimers for Realsil's products, and no additional obligations or liabilities arise from Realsil providing such Realsil Resources. Realsil reserves the right to make corrections, enhancements, improvements and other changes to its Realsil Resources. Realsil has not conducted any testing other than that specifically described in the published documentation for a particular Realsil Resource.
Customer is authorized to use, copy and modify any individual Realsil Resource only in connection with the development of applications that include the Realsil product(s) identified in such Realsil Resouce. No other license, express or implied, by estoppel or otherwise to any other Realsil intellectual property right, and no license to any technology or intellectual property right of Realsil or any third party is granted herein, including but not limited to any patent right, copyright, mask work right, or other intellectual property right relating to any combination, machine, or process in which Realsil products or services are used. Information regarding or referencing third-party products or services does not constitute a license to use such products or services, or a warranty or endorsement thereof. Use of Realsil Resources may require a license from a third party under the patents or other intellectual property of the third party, or a license from Realsil under the patents or other Realsil's intellectual property.
Realsil's Resources are provided "as is" and with all faults. Realsil disclaims all other warranties or representations, express or implied, regarding resources or use thereof, including but not limited to accuracy or completeness, title, any epidemic failure warranty and any implied warranties of merchantability, fitness for a particular purpose, and non-infringement of any third party intellectual property rights.
Realsil shall not be liable for and shall not defend or indemnify Customer against any claim, including but not limited to any infringement claim that related to or is based on any combination of products even if described in Realsil Resources or otherwise. In no event shall Realsil be liable for any actual, direct, special, collateral, indirect, punitive, incidental, consequential or exemplary damages in connection with or arising out of Realsil's Resources or use thereof, and regardless of whether Realsil has been advised of the possibility of such damages. Realsil is not responsible for any failure to meet such industry standard requirements.
Where Realsil specifically promotes products as facilitating functional safety or as compliant with industry functional safety standards, such products are intended to help enable customers to design and create their own applications that meet applicable functional safety standards and requirements. Using products in an application does not by itself establish any safety features in the application. Customers must ensure compliance with safety-related requirements and standards applicable to their applications. Designer may not use any Realsil products in life-critical medical equipment unless authorized officers of the parties have executed a special contract specifically governing such use. Life-critical medical equipment is medical equipment where failure of such equipment would cause serious bodily injury or death. Such equipment includes, without limitation, all medical devices identified by the U.S.FDA as Class III devices and equivalent classifications outside the U.S.
Customers agree that it has the necessary expertise to select the product with the appropriate qualification designation for their applications and that proper product selection is at Customers' own risk. Customers are solely responsible for compliance with all legal and regulatory requirements in connection with such selection.
Customer will fully indemnify Realsil and its representatives against any damages, costs, losses, and/or liabilities arising out of Designer's non-compliance with the terms and provisions of this Notice.

Realtek Confidential for DLINK

TRADEMARKS

is a trademark of Realsil Microelectronics (Suzhou) co. Ltd. Other names mentioned in this document are trademarks/registered trademarks of their respective owners.

USING THIS DOCUMENT

This document is intended for the software engineer's reference and provides detailed programming information.

Though every effort has been made to ensure that this document is current and accurate, more information may have become available subsequent to the production of this guide.

Realtek Confidential for DL

All information provided in this document is subject to legal disclaimers.
© Realsil 2022. All rights reserved.

Contact Us

- **Official website:** https://www.realmcu.com
- **Development documents:** https://www.realmcu.com/en/Home/DownloadList
- **Official forum:** https://www.realmcu.com/community/cimd
- **Sample purchase:** https://shop467975900.taobao.com
- **Business cooperation:** iot_sales@realsil.com.cn
- **Technical support:** iot_support@realsil.com.cn

Realtek Confidential for DL

All information provided in this document is subject to legal disclaimers.
© Realsil 2022. All rights reserved.

Contents

Contact Us **4**

Contents **5**

1 Module Overview **6**

1.1 General Description 6
1.2 Features 6

2 Module Block Diagram **7**

3 Module Pin Definition **8**

3.1 Module Pin Layout 8
3.2 Module Pin Description 8
3.2.1 Pin Description 8
3.2.2 Strapping Pins 9

4 RF Characteristic **10**

4.1 Wi-Fi Radio Standard 10
4.1.1 Wi-Fi 2.4GHz Band RF Transmitter Specification 10
4.1.2 Wi-Fi 2.4GHz Band RF Receiver Specification 10
4.2 Bluetooth LE Radio Standard 11
4.2.1 Bluetooth LE RF Transmitter Specification 11
4.2.2 Bluetooth LE RF Receiver Specification 12

5 Module Electrical Characteristics **12**

5.1 Module Operating Conditions 12
5.2 Module DC Characteristics 12

6 Module Schematics **13**

6.1 Module Internal Schematics 13
6.2 Module Reference Schematics 13

7 Physical Dimensions **14**

8 Product Handling **15**

8.1 Storage Conditions 15
8.2 Production Instructions 15
8.3 Recommended Oven Temperature Curve 16

9 Revision History **17**

Realtek Confidential for DL

All information provided in this document is subject to legal disclaimers.

© Realsil 2022. All rights reserved.

1 Module Overview

1.1 General Description

The PKM8710ECF-C53-F20 is a multi-radio MCU module. With the open CPU architecture, customers can develop advanced applications running on the dual RISC cores. The radio provides support for Wi-Fi 802.11 b/g/n/ax in the 2.4GHz band with 20MHz bandwidth and BLE 5.2 communications. The rich set of peripherals and high performance make it an ideal choice for smart homes, industrial automation, consumer electronics, etc.

1.2 Features

Chipset and Memory:

- RTL8710ECF-VA3-CG (named RTL8710ECF thereafter) chipset embedded, dual-core processor: KM4 up to 400MHz, KR4 up to 400MHz
- on-chip memory: 768KB SRAM
- 8MB Flash

Wi-Fi:

- 802.11 b/g/n/ax 1x1, 2.4GHz
- Center frequency range of operating channel: 2412MHz ~ 2472MHz
- Support 20MHz bandwidth, up to the data rate of MCS9
- Wi-Fi WPA, WPA2, WPA3, WPS; open, shared key, and pair-wise key authentication services
- Power-saving mechanism
- Supports AP/STA/Concurrent mode (802.11ax AP not supported)
- Frame aggregation for increased MAC efficiency (A-MPDU)

Bluetooth Low Energy:

- Bluetooth LE: Bluetooth 5.2 (LE-1M/LE-2M/LE-Coded PHY (long range))
- Supports both 500kbps and 125kbps LE-Coded PHY (long range)
- Support LE secure connections
- AoA and AoD (both connection-oriented and connectionless)
- Supports both flooding-mode and scatter-mode SIG mesh
- Supports scatter-net (concurrent central and peripheral mode)
- Co-existence RF design between Wi-Fi and Bluetooth

Peripherals:

- 4x UART interface, baud rate up to 8Mbps within high-speed mode (40MHz)
- 2 x I2C, three speed modes: standard up to 100Kbps, fast up to 400Kbps, high to 3.4Mbps
- 2 x SPI Master/Slave, baud rate up to 50MHz
- 8 x PWM with configurable duration and duty cycle from 0 ~ 100%
- Cap touch x 9 channels
- ADC x 6 channels
- 17 x programmable GPIOs

Antenna Option:

- On-board PCB antenna

Operating Conditions:

- Operating input voltage: (3.3 ± 10%)V
- Operating ambient temperature: -40°C to 105°C

All information provided in this document is subject to legal disclaimers.

© Realsil 2022. All rights reserved.

2 Module Block Diagram

This module includes the chipset, crystal component, R/L/C components for RF matching, decoupling and RF radio antenna.

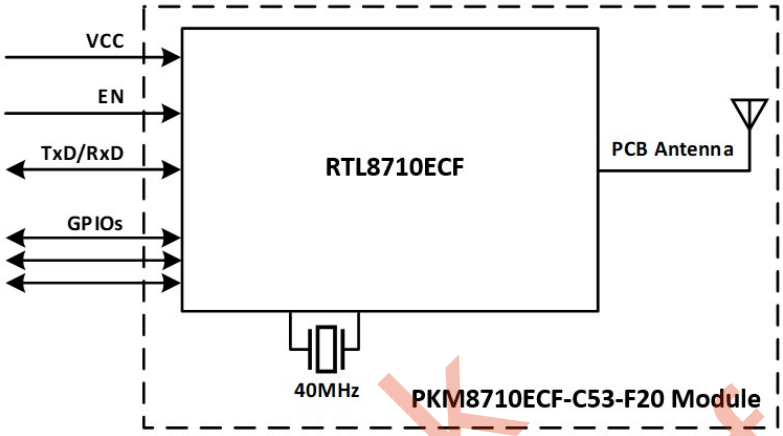

Figure 1. Block Diagram

Realtek Confidential for DL

All information provided in this document is subject to legal disclaimers.
© Realsil 2022. All rights reserved.

3 Module Pin Definition

3.1 Module Pin Layout

This module has 22 pins.

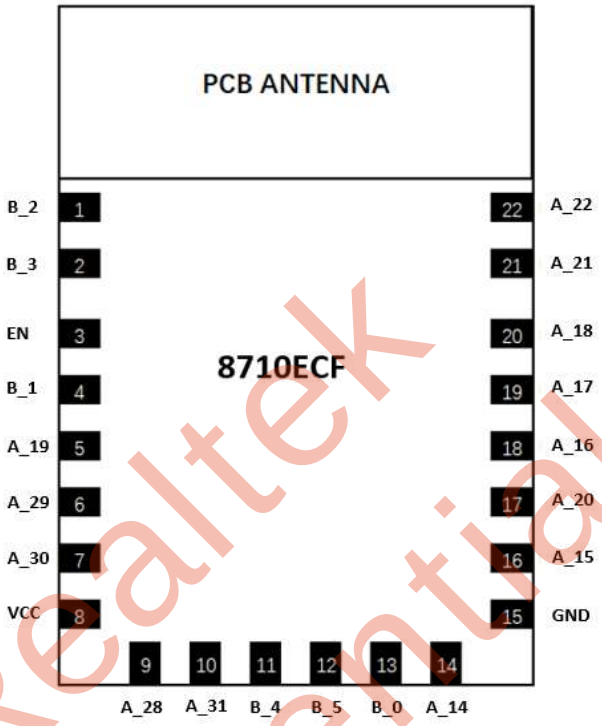

Figure 2. Module Pin Layout (Top View)

3.2 Module Pin Description

3.2.1 Pin Description

Table 1. Pin Description

Pin Name	Pin No.	Type	Description	UART is available	I2C is available	PWM is available
B_2	1	I/O	GPIOB_2 / TOUCH3_ADC3 / SPI1_CLK	√	√	√
B_3	2	I/O	GPIOB_3 / TOUCH2_ADC2 / SPI1_MOSI	√	√	√
EN	3	I	● High: Enable the chip. ● Low: Module power off.	NA	NA	NA
B_1	4	I/O	GPIOB_1 / TOUCH4_ADC4 / SHARE_SWD_CLK	√	√	√
A_19	5	I/O	GPIOA_19 / UART_LOG_RXD	NA	NA	NA
A_29	6	I/O	GPIOA_29 / TOUCH7 / SPI0_MOSI	√	√	√
A_30	7	I/O	GPIOA_30 / TOUCH6 / SPI0_MISO	√	√	√
VCC	8	P	Power Supply	NA	NA	NA
A_28	9	I/O	GPIOA_28 / TOUCH8 / SPI0_CLK	√	√	√
A_31	10	I/O	GPIOA_31 / TOUCH5 / SPI0_CS	√	√	√
B_4	11	I/O	GPIOB_4 / TOUCH1_ADC1 / SPI1_MISO	√	√	√
B_5	12	I/O	GPIOB_5 / TOUCH0_ADC0 / SPI1_CS	√	√	√
B_0	13	I/O	GPIOB_0 / ADC5 / SHARE_SWD_DATA	√	√	√
A_14	14	I/O	GPIOA_14	√	√	√
GND	15	P	Ground	NA	NA	NA
A_15	16	I/O	GPIOA_15 / SPI0_CLK	√	√	√

Realtek Confidential for DL

All information provided in this document is subject to legal disclaimers.
© Realsil 2022. All rights reserved.

A_20	17	I/O	GPIOA_20 / UART_LOG_TXD	NA	NA	NA
A_16	18	I/O	GPIOA_16 / SPI0_MOSI	√	√	√
A_17	19	I/O	GPIOA_17 / SPI0_MISO	√	√	√
A_18	20	I/O	GPIOA_18 / SPI0_CS	√	√	√
A_21	21	I/O	GPIOA_21 / KR_SWD_DATA	√	√	√
A_22	22	I/O	GPIOA_22 / KR_SWD_CLK	√	√	√

NOTE

- ***P**: power supply*
- ***I**: input*
- ***O**: output*
- *Detail Available pin refer to "pin_mux" table*

3.2.2 Strapping Pins

This module has 2 strapping pins.

Table 2. Strapping Pin

Pin Name	Pin No.	Default State	Description
A_20	17	Pull up	1: Normal mode (default) 0: Flash download mode
A_22	22	Pull up	1: power supply option 1 0: power supply option 2 (default)

Realtek Confidential for DL

All information provided in this document is subject to legal disclaimers.
© Realsil 2022. All rights reserved.

4 RF Characteristic

4.1 Wi-Fi Radio Standard

Table 3. Wi-Fi Radio Standard

Wi-Fi Wireless Standard	Description
Wi-Fi frequency range	● 2412MHz ~ 2472MHz (2.4GHz ISM Band)
Wi-Fi wireless standard	IEEE 802.11 b/g/n/ax
Wi-Fi wireless standard Modulation	DSSS/CCK/BPSK/QPSK/16-QAM/64-QAM/256QAM
Wi-Fi wireless data rate	● 802.11 b: 1/2/5.5/11 Mbps ● 802.11 g: 6/9/12/18/24/36/48/54 Mbps ● 802.11 n: HT20 MCS0-7 ● 802.11 ax: HE20 MCS0-9

4.1.1 Wi-Fi 2.4GHz Band RF Transmitter Specification

Table 4. Wi-Fi 2.4GHz Transmitter Performance Specification

Parameter	Condition	Performance			Unit
		Min.	Typ.	Max.	
Frequency Range	Center channel frequency	2412	-	2484	MHz
Output power with spectral mask and EVM compliance[1] (25°C)	1Mbps CCK	-	20	-	dBm
	11Mbps CCK	-	20	-	dBm
	BPSK rate 1/2, 6Mbps OFDM	-	20	-	dBm
	64-QAM rate 3/4, 54Mbps OFDM	-	19	-	dBm
	HT20,MCS 0, BPSK rate 1/2	-	20	-	dBm
	HT20, MCS 7, 64-QAM rate 5/6	-	18	-	dBm
	HE20, MCS 8, 256-QAM rate 3/4	-	27	-	dBm
	HE20, MCS 9, 256-QAM rate 5/6	-	16	-	dBm
Tx EVM	BPSK rate 1/2, 6Mbps OFDM	-		-5	dB
	64-QAM rate 3/4, 54Mbps OFDM	-		-25	dB
	HT20, MCS 0, BPSK rate 1/2	-		-5	dB
	HT20, MCS 7, 64-QAM rate 5/6	-		-27	dB
	HE20, MCS 8, 256-QAM rate 3/4	-		-30	dB
	HE20, MCS 9, 256-QAM rate 5/6	-		-32	dB
Output power variation	TSSI on across operating temperature range, all channels and VSWR≤1.5:1 at RFIO port	-1.5		1.5	dB
Carrier Suppression		-	-	-32	dBc
Harmonic output power[2]	2nd Harmonic	-	-21	-	dBm/MHz
	3rd Harmonic	-	-20	-	dBm/MHz

4.1.2 Wi-Fi 2.4GHz Band RF Receiver Specification

Table 5. Wi-Fi 2.4GHz Receiver Performance Specification

Parameter	Condition	Performance			Unit
		Min.	Typ.	Max.	
Frequency Range	Center channel frequency	2412	-	2484	MHz
802.11b Rx Sensitivity (8% PER)	1 Mbps CCK	-	-100	-	dBm
	2 Mbps CCK	-	-97	-	dBm
	5.5 Mbps CCK	-	-94	-	dBm
	11 Mbps CCK	-	-91	-	dBm
802.11g Rx Sensitivity (10% PER)	BPSK rate 1/2, 6Mbps OFDM	-	-95	-	dBm
	BPSK rate 3/4, 9Mbps OFDM	-	-94	-	dBm
	QPSK rate 1/2, 12Mbps OFDM	-	-92.5	-	dBm

Realtek Confidential for DL

	QPSK rate 3/4, 18Mbps OFDM	-	-90	-	dBm
	16-QAM rate 1/2, 24Mbps OFDM	-	-87	-	dBm
	16-QAM rate 3/4, 36Mbps OFDM	-	-83.5	-	dBm
	64-QAM rate 1/2, 48Mbps OFDM	-	-79.5	-	dBm
	64-QAM rate 3/4, 54Mbps OFDM	-	-78	-	dBm
802.11n Rx Sensitivity (10% PER) BW=20MHz	MCS 0, BPSK rate 1/2	-	-95	-	dBm
	MCS 1, QPSK rate 1/2	-	-92.5	-	dBm
	MCS 2, QPSK rate 3/4	-	-90	-	dBm
	MCS 3, 16-QAM rate 1/2	-	-86.5	-	dBm
	MCS 4, 16-QAM rate 3/4	-	-83.5	-	dBm
	MCS 5, 64-QAM rate 2/3	-	-79.5	-	dBm
	MCS 6, 64-QAM rate 3/4	-	-78	-	dBm
	MCS 7, 64-QAM rate 5/6	-	-76.5	-	dBm
802.11ax Rx Sensitivity (10% PER) BW=20MHz	MCS 0, BPSK rate 1/2	-	-95	-	dBm
	MCS 1, QPSK rate 1/2	-	-92	-	dBm
	MCS 2, QPSK rate 3/4	-	-89.5	-	dBm
	MCS 3, 16-QAM rate 1/2	-	-86.5	-	dBm
	MCS 4, 16-QAM rate 3/4	-	-83	-	dBm
	MCS 5, 64-QAM rate 2/3	-	-79	-	dBm
	MCS 6, 64-QAM rate 3/4	-	-78	-	dBm
	MCS 7, 64-QAM rate 5/6		-76.5		dBm
	MCS 8, 256-QAM rate 3/4		-72.5		dBm
	MCS 9, 256-QAM rate 5/6	-	-70.5	-	dBm
Maximum Receive Level	6Mbps OFDM	-	0		dBm
	54Mbps OFDM	-	0		dBm
	11n MCS 0 HT20	-	0		dBm
	11n MCS 7 HT20	-	0		dBm
	11ax MCS 0 HE20	-	0		dBm
	11ax MCS 9 HE20	-	0		dBm
Adjacent Channel Rejection	11Mbps CCK		46		dBm
	BPSK rate 1/2, 6Mbps OFDM		45		dBm
	64-QAM rate 3/4, 54Mbps OFDM		25		dBm
	HT20, MCS 0, BPSK rate 1/2		42		dBm
	HT20, MCS 7, 64-QAM rate 5/6		24		dBm
	HE20, MCS 0, BPSK rate 1/2		42		dBm
	HE20, MCS 8, 256-QAM rate 3/4		20		dBm
	HE20, MCS 9, 256-QAM rate 5/6		17		dBm

4.2 Bluetooth LE Radio Standard

4.2.1 Bluetooth LE RF Transmitter Specification

Table 6. Bluetooth LE Transmitter Performance Specification

Parameter	Condition	Performance			Unit
		Min.	Typ.	Max.	
Frequency Range	Center channel frequency	2402	2440	2480	MHz
Output Power	At max. power output level		8	10	dBm
Carrier Frequency Offset and Drift	Frequency offset		±10		kHz
	Frequency drift		±10	-	kHz
	Max. drift rate		±10	-	kHz
Modulation Characteristics	ΔF1 Avg.		250		kHz
	ΔF2 Max.	185	-	-	kHz
	ΔF2 Avg./ΔF1 Avg		0.93	-	
In-Band Emissions	±2MHz offset		-51	-	dbm
	≥ ±3MHz offset		-53	-	dbm

Realtek Confidential for DL

All information provided in this document is subject to legal disclaimers.
© Realsil 2022. All rights reserved.

4.2.2 Bluetooth LE RF Receiver Specification

Table 7. Bluetooth LE Receiver Performance Specification

Parameter	Condition	Performance			Unit
		Min.	Typ.	Max.	
Frequency Range	Center channel frequency	2402	2440	2480	MHz
Receiver Sensitivity	PER<30.8%		-99		dBm
Max. Usable Signal	PER<30.8%		0		dBm
C/I co-channel (PER<30.8%)	Co-channel sensitivity		5		dB
C/I 1MHz (PER<30.8%)	Adjacent channel selectivity		-7		dB
C/I 2MHz (PER<30.8%)	2nd adjacent channel selectivity		-48		dB
C/I >= 3MHz (PER<30.8%)	3rd adjacent channel selectivity		-56		dB
C/I Image Channel (PER<30.8%)	Image channel selectivity		-25		dB
C/I Image 1MHz (PER<30.8%)	1MHz adjacent to image channel selectivity		-29		dB
Inter-modulation			-27		dBm
Out-of-band blocking	30MHz to 2000MHz	-30		-	dBm
	2003MHz to 2399MHz	-35			dBm
	2484MHz to 2997MHz	-35			dBm
	3000MHz to 12.75GHz	-30		-	dBm

5 Module Electrical Characteristics

5.1 Module Operating Conditions

Table 8. Module Operating Conditions

Symbol	Parameter	Min.	Typ.	Max.	Units
VCC	Power supply voltage	2.97	3.3	3.63	V
Ta	Ambient operating temperature	-40	-	105	°C
Ts	Storage temperature	-40	-	125	°C

5.2 Module DC Characteristics

Table 9. DC Characteristic (3.3V, 25°C)

Symbol	Parameter	Conditions	Min.	Typ.	Max.	Units
VIH	Input-High Voltage	LVTTL	2.0	-	-	V
VIL	Input-Low Voltage	LVTTL	-	-	0.8	V
VOH	Output-High Voltage	LVTTL	2.4	-	-	V
VOL	Output-Low Voltage	LVTTL	-	-	0.4	V
VT+	Schmitt-trigger High Level	-	1.78	1.87	1.97	V
VT-	Schmitt-trigger Low Level	-	1.36	1.45	1.56	V
IIL	Input-Leakage Current	VIN=3.3V or 0	-10	±1	10	μA

Realtek Confidential for DL

All information provided in this document is subject to legal disclaimers.
© Realsil 2022. All rights reserved.

6 Module Schematics

6.1 Module Internal Schematics

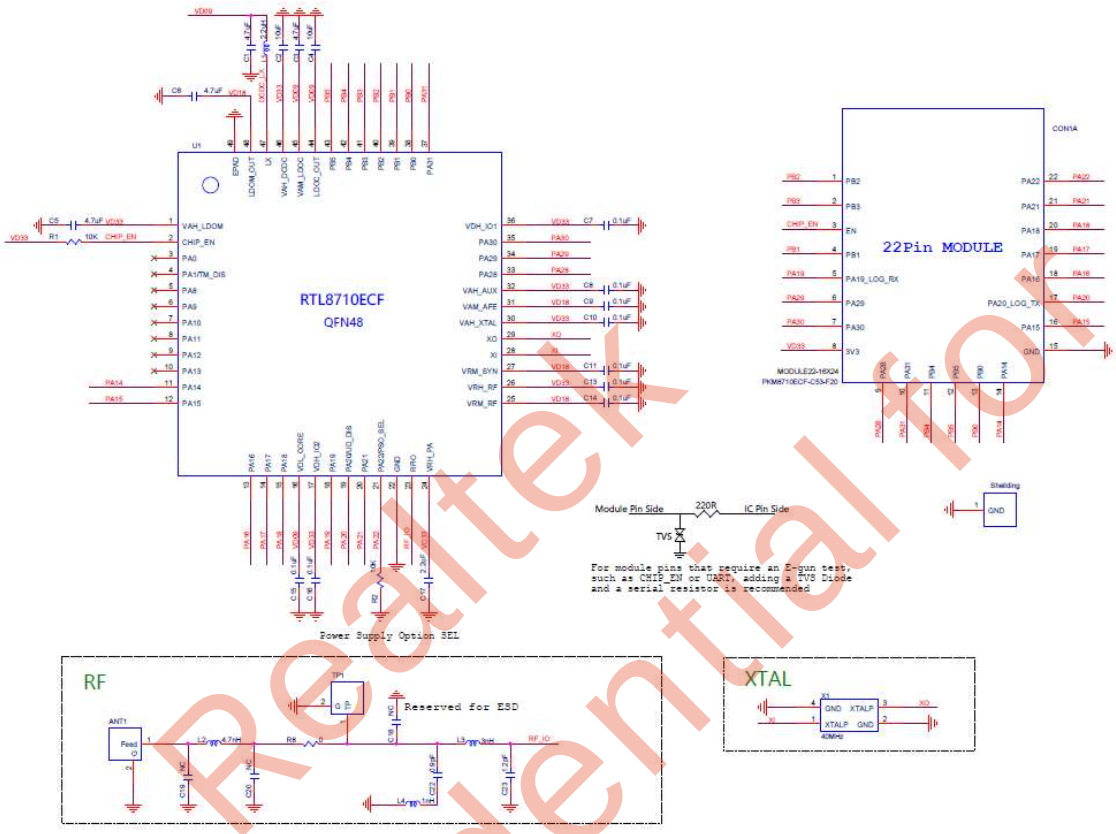

Figure 3. Module internal schematics

6.2 Module Reference Schematics

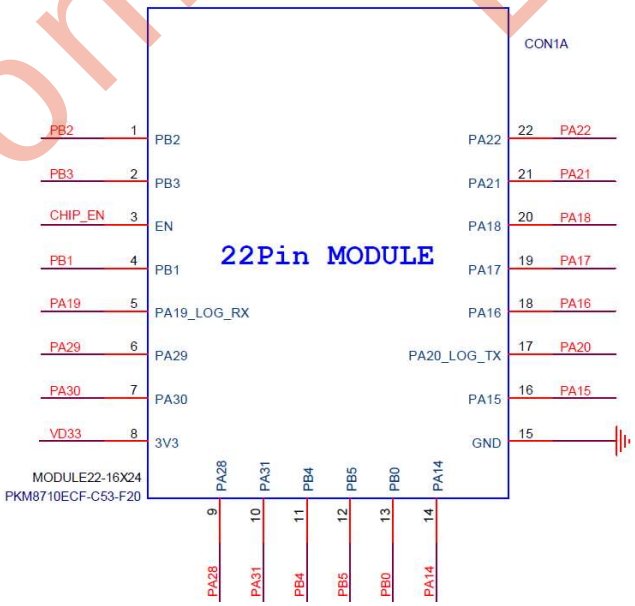

Figure 4. Module Reference schematics

Realtek Confidential for DL

All information provided in this document is subject to legal disclaimers.
© Realsil 2022. All rights reserved.

7 Physical Dimensions

Module dimension: 24 ± 0.2mm (L) x 16 ± 0.2mm (W) x 2.3 ± 0.1mm (H)

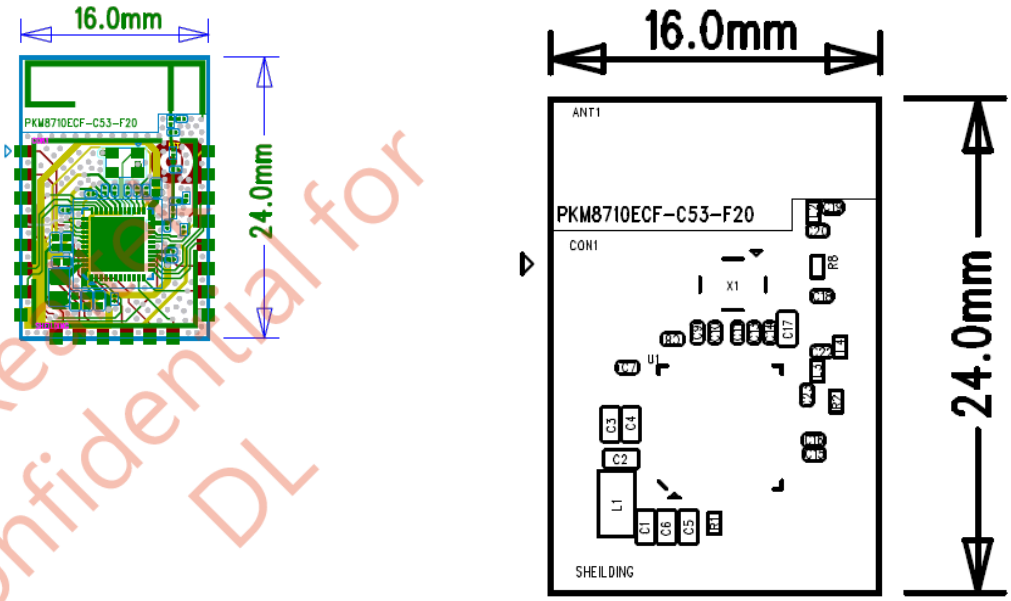

Restricted Confidential for DL

Figure 5. Module Physical Dimensions

All information provided in this document is subject to legal disclaimers.
© Realsil 2022. All rights reserved.

8 Product Handling

8.1 Storage Conditions

The storage conditions for a delivered module:

- Moisture sensitive level (MSL): 3
- Calculated shelf life in sealed bag: 12 months at <40°C and <90% relative humidity (RH)
- Peak package body temperature: 260°C
- A humidity indicator card (HIC) in the packaging bag.

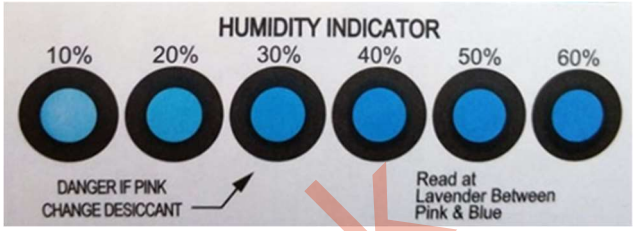

- After bag is opened, the module that will be subjected to reflow solder or other high temperature process must be
  - Mounted within: 168 hours of factory conditions ≤30°C/60% RH, or
  - Stored per J-STD-033
- The module needs to be baked in the following cases:
  - The packaging bag is damaged before unpacking.
  - There is no humidity indicator card (HIC) in the packaging bag.
  - After unpacking, circles of 10% and above on the HIC become pink.
  - The total exposure time has lasted for over 168 hours since unpacking.
  - More than 12 months have passed since the sealing of the bag.
- If baking is required, refer to IPC/JEDEC J-STD-033 for bake procedure.

NOTE

Level and body temperature are defined by IPC/JEDECJ-STD-020.

8.2 Production Instructions

- The PKM8720F-C13-F10 module can be packaged with the SMT process according to the customer's PCB designed to be SMT-packaged. After being unpacked, the module must be soldered within 24 hours. Otherwise, it needs to be put into the drying cupboard where the relative humidity is not greater than 10%; or it needs to be packaged again under vacuum and the exposure time needs to be recorded (the total exposure time cannot exceed 168 hours).
  - SMT devices needed:
    - Mounter
    - SPI
    - Reflow soldering machine
    - Thermal profiler
    - Automated optical inspection (AOI) equipment
  - Baking devices needed:
    - Cabinet oven
    - Anti-electrostatic and heat-resistant trays
    - Anti-electrostatic and heat-resistant gloves
- Baking settings:
  - Temperature: 40°C and ≤ 5% RH for reel package and 125°C and ≤5% RH for tray package (use the heat-resistant tray rather than a plastic container)
  - Time: 168 hours for reel package and 12 hours for tray package
  - Alarm temperature: 50°C for reel package and 135°C for tray package
  - Production-ready temperature after natural cooling: < 36°C
  - Re-baking situation: If a module remains unused for over 168 hours after being baked, it needs to be baked again.
  - If a batch of modules is not baked within 168 hours, do not use the wave soldering to solder them. Because these modules are Level-3 moisture-sensitive devices, they are very likely to get damp when exposed beyond the allowable time. In this case, if they are soldered at high temperatures, it may result in device failure or poor soldering.
- In the whole production process, take electrostatic discharge (ESD) protective measures.

Realtek Confidential for DL

All information provided in this document is subject to legal disclaimers.
© Realsil 2022. All rights reserved.

- To guarantee the passing rate, it is recommended to use the SPI and AOI to monitor the quality of solder paste printing and mounting.

8.3 Recommended Oven Temperature Curve

There are some differences between the set temperatures and the actual temperatures. All the temperatures listed in this datasheet are obtained through actual measurements.

For the SMT process, set oven temperatures according to Figure 6.

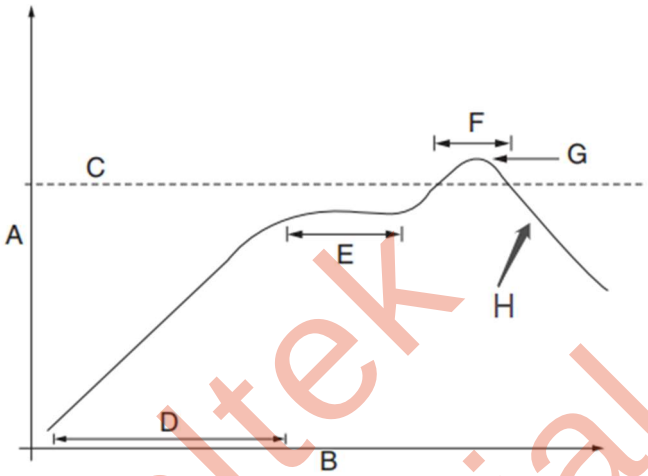

Figure 6. Reflow Soldering Curve Diagram

- D: Rising speed = (1 ~ 3)°C/s, 20°C ~ 150°C, 60s ~ 90s
- E: Average preheating temperature = 150°C ~ 200°C, 60s ~ 120s
- F: Temperature fluctuation > 217°C, 50s to 70s; peak temperature = 235°C ~ 245°C
- H: Drop speed = (1 ~ 4)°C/s

NOTE

Adjust the balance time to ensure the rationalization treatment of gas when tin paste solves. If there are too much gaps on the PCB board, increase the balance time. Considering that the product is long placed in the welding area, to prevent components and bottom plate from damage.

Realtek Confidential for DL

All information provided in this document is subject to legal disclaimers.
© Realsil 2022. All rights reserved.

9 Revision History

Data	Revision	Change Note
2023-03-30	1.0	Initial release
2024-09-27	1.1	Change contact email
2024-09-27	1.2	Change on-chip SRAM memory size

Realtek Confidential for DL

All information provided in this document is subject to legal disclaimers.
© Realsil 2022. All rights reserved.

9 warning

9.1 Federal Communication Commission Interference Statement

This equipment has been tested and found to comply with the limits for a Class B digital device, pursuant to Part 15 of the FCC Rules. These limits are designed to provide reasonable protection against harmful interference in a residential installation. This equipment generates, uses and can radiate radio frequency energy and, if not installed and used in accordance with the instructions, may cause harmful interference to radio communications. However, there is no guarantee that interference will not occur in a particular installation. If this equipment does cause harmful interference to radio or television reception, which can be determined by turning the equipment off and on, the user is encouraged to try to correct the interference by one of the following measures:

- Reorient or relocate the receiving antenna.
- Increase the separation between the equipment and receiver.
- Connect the equipment into an outlet on a circuit different from that to which the receiver is connected.
- Consult the dealer or an experienced radio/TV technician for help.

This device complies with Part 15 of the FCC Rules. Operation is subject to the following two conditions: (1) This device may not cause harmful interference, and (2) this device must accept any interference received, including interference that may cause undesired operation.

FCC Caution: Any changes or modifications not expressly approved by the party responsible for compliance could void the user's authority to operate this equipment.

IMPORTANT NOTE:
FCC Radiation Exposure Statement:
This equipment complies with FCC radiation exposure limits set forth for an uncontrolled environment. This equipment should be installed and operated with minimum distance 20cm between the radiator & your body.

This device and its antenna(s) must not be co-located with any other transmitters except in accordance with FCC multi-transmitter product procedures.
Refering to the multi-transmitter policy, multiple-transmitter(s) and module(s) can be operated simultaneously without C2PC.

This module is intended for OEM integrator. The OEM integrator is responsible for the compliance to all the rules that apply to the product into which this certified RF module is integrated.
Additional testing and certification may be necessary when multiple modules are used.

List of applicable FCC rules
This module has been tested and found to comply with 15.247 requirements for Modular Approval.
The modular transmitter is only FCC authorized for the specific rule parts (i.e., FCC transmitter rules) listed on the grant, and that the host product manufacturer is responsible for compliance to any other FCC rules that apply to the host not covered by the modular transmitter grant of certification. If the grantee markets their product as being Part 15 Subpart B compliant (when it also contains unintentional-radiator digital circuity), then the grantee shall provide a notice stating that the final host product still requires Part 15 Subpart B compliance testing with the modular transmitter installed.

USERS MANUAL OF THE END PRODUCT:
In the users manual of the end product, the end user has to be informed to keep at least 20cm separation with the antenna while this end product is installed and operated. The end user has to be informed that the FCC radio-frequency exposure guidelines for an uncontrolled environment can be satisfied. The end user has to also be informed that any changes or modifications not expressly approved by the manufacturer could void the user's authority to operate this equipment. If the size of the end product is smaller than 8x10cm, then additional FCC part 15.19 statement is required to be available in the users manual: This device complies with Part 15 of FCC rules. Operation is subject to the following two conditions: (1) this device may not cause harmful interference and (2) this device must accept any interference received, including interference that may cause undesired operation.

LABEL OF THE END PRODUCT:
The final end product must be labeled in a visible area with the following " Contains TX FCC ID: 2BASB-PKM8710ECF ". If the size of the end product is larger than 8x10cm, then the following FCC part 15.19 statement has to also be available on the label: This device complies with Part 15 of FCC rules. Operation is subject to the following two conditions: (1) this device may not cause harmful interference and (2) this device must accept any interference received, including interference that may cause undesired operation.

All information provided in this document is subject to legal disclaimers.
© REALTEK 2020. All rights reserved.

This module is intended for OEM integrators only. Per FCC KDB 996369 D03 OEM Manual v01 guidance, the following conditions must be strictly followed when using this certified module:

KDB 996369 D03 OEM Manual v01 rule sections:

2.2 List of applicable FCC rules

This module has been tested for compliance to FCC Part 15.247.

2.3 Summarize the specific operational use conditions

The module is typically use in industrial, household and general office / ITE and audio & video, EV charging system end-products. The product must not be co-located or operating in conjunction with any other antenna or transmitters.

2.4 Limited module procedures

Not applicable.

2.5 Trace antenna designs

Not applicable.

2.6 RF exposure considerations

This equipment complies with FCC mobile radiation exposure limits set forth for an uncontrolled environment. This equipment should be installed and operated with a minimum distance of 20cm between the radiator & your body. If the module is installed in a portable host, a separate SAR evaluation is required to confirm compliance with relevant FCC portable RF exposure rules.

2.7 Antennas

The following antennas have been certified for use with this module; antennas of the same type with equal or lower gain may also be used with this module. The antenna must be

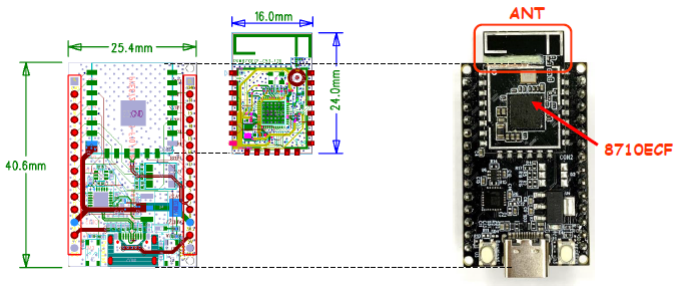

Freq.	2400MHz												
Plane	*xy*-plane				*yz*-plane				*xz*-plane				Efficiency (%)
Pol.	h		v		h		v		h		v		
Gain (dBi)	peak	avg.	peak	avg.	peak	avg.	peak	avg.	peak	avg.	peak	avg.	
	+4.5	-1.4	-6.4	-12.3	-2.8	-9.5	+1.8	-2.2	+4.3	-2.3	-1.8	-6.7	76.5

Freq.	2450MHz												
Plane	*xy*-plane				*yz*-plane				*xz*-plane				Efficiency (%)
Pol.	h		v		h		v		h		v		
Gain (dBi)	peak	avg.	peak	avg.	peak	avg.	peak	avg.	peak	avg.	peak	avg.	
	+3.1	-2.6	-4.6	-11.2	-2.0	-9.5	+2.4	-1.6	+4.1	-2.6	-1.0	-6.5	73.4

Freq.	2480MHz												
Plane	*xy*-plane				*yz*-plane				*xz*-plane				Efficiency (%)
Pol.	h		v		h		v		h		v		
Gain (dBi)	peak	avg.	peak	avg.	peak	avg.	peak	avg.	peak	avg.	peak	avg.	
	+2.9	-3.2	-2.7	-10.5	-3.5	-10.2	+2.8	-1.1	+1.9	-3.5	-0.5	-5.9	71.4

2.8 Label and compliance information

The final end product must be labeled in a visible area with the following: "Contains FCC ID: **2BASB-PKM8710ECF**". The grantee's FCC ID can be used only when all FCC compliance requirements are met.

2.9 Information on test modes and additional testing requirements

This transmitter is tested in a standalone mobile RF exposure condition and any co-located or simultaneous transmission with other transmitter(s) or portable use will require a separate class II permissive change re-evaluation or new certification.

2.10 Additional testing, Part 15 Subpart B disclaimer

Host manufacturer is responsible for compliance of the host system with module installed with all other applicable requirements for the system such as Part 15 B.

IMPORTANT NOTE: In the event that these conditions can not be met (for example certain laptop configurations or co-location with another transmitter), then the FCC authorization is no longer considered valid and the FCC ID can not be used on the final product. In these circumstances, the OEM integrator will be responsible for re-evaluating the end product (including the transmitter) and obtaining a separate FCC authorization.

Manual Information To the End User

The OEM integrator has to be aware not to provide information to the end user regarding how to install or remove this RF module in the user's manual of the end product which integrates this module.

The end user manual shall include all required regulatory information/warning as show in this manual.

OEM/Host manufacturer responsibilities

OEM/Host manufacturers are ultimately responsible for the compliance of the Host and Module. The final product must be reassessed against all the essential requirements of the FCC rule such as FCC Part 15 Subpart B before it can be placed on the US market. This includes reassessing the transmitter module for compliance with the Radio and EMF essential requirements of the FCC rules. This module must not be incorporated into any other device or system without retesting for compliance as multi-radio and combined equipment