FCC Test Report

Applicant	:	**Huizhou Intelligent Energy Co., Ltd.**
Address	:	**8-9/F,Bldg.E2,Qunyi Industrial Park,Sanhe Avenue, Tonghu Town, Zhongkai High-tech Zone, HuiZhou, 516039, China**
Product Name	:	**PORTABLE POWER STATION**
Report Date	:	**Apr. 01, 2024**

Shenzhen Anbotek Compliance Laboratory Limited

Contents

1. General Information 5
1.1. Client Information 5
1.2. Description of Device (EUT) 5
1.3. Auxiliary Equipment Used During Test 6
1.4. Description of Test Modes 7
1.5. Description Of Test Setup 8
1.6. Test Equipment List 9
1.7. Measurement Uncertainty 10
1.8. Description of Test Facility 10
1.9. Disclaimer 10
2. Summary of Test Results 11
3. Conducted Emission Test 12
3.1. Test Standard and Limit 12
3.2. Test Setup 12
3.3. Test Procedure 12
3.4. Test Data 12
4. Radiation Spurious Emission 15
4.1. Test Standard and Limit 15
4.2. Test Setup 15
4.3. Test Procedure 16
4.4. Test Data 16
5. Antenna Requirement 21
5.1. Test Standard and Requirement 21
5.2. Antenna Connected Construction 21
APPENDIX I -- TEST SETUP PHOTOGRAPH 22
APPENDIX II -- EXTERNAL PHOTOGRAPH 22
APPENDIX III -- INTERNAL PHOTOGRAPH 22

TEST REPORT

Applicant	:	Huizhou Intelligent Energy Co., Ltd.
Manufacturer	:	Huizhou Intelligent Energy Co., Ltd.
Product Name	:	PORTABLE POWER STATION
Test Model No.	:	G1000Pro
Reference Model No.	:	N/A
Trade Mark	:	N/A
Rating(s)	:	Please see page 6.
Test Standard(s)	**:**	**FCC Part15 Subpart C, Paragraph 15.209**
Test Method(s)	**:**	**ANSI C63.10: 2020**

The device described above is tested by Shenzhen Anbotek Compliance Laboratory Limited to determine the maximum emission levels emanating from the device and the severe levels of the device can endure and its performance criterion. The measurement results are contained in this test report and Shenzhen Anbotek Compliance Laboratory Limited is assumed full of responsibility for the accuracy and completeness of these measurements. Also, this report shows that the EUT (Equipment Under Test) is technically compliant with the FCC Part 15 Subpart C requirements.

This report applies to above tested sample only and shall not be reproduced in part without written approval of Shenzhen Anbotek Compliance Laboratory Limited.

Date of Receipt Mar. 13, 2024

Date of Test Mar. 13 ~ 25, 2024

Prepared By Ella Liang

(Ella Liang)

Approved & Authorized Signer Edward pan

(Edward Pan)

Revision History

Report Version	Description	Issued Date
R00	Original Issue.	Apr. 01, 2024

1. General Information

1.1. Client Information

Applicant	:	Huizhou Intelligent Energy Co., Ltd.
Address	:	8-9/F,Bldg.E2,Qunyi Industrial Park,Sanhe Avenue, Tonghu Town, Zhongkai High-tech Zone, HuiZhou, 516039, China
Manufacturer	:	Huizhou Intelligent Energy Co., Ltd.
Address	:	8-9/F,Bldg.E2,Qunyi Industrial Park,Sanhe Avenue, Tonghu Town, Zhongkai High-tech Zone, HuiZhou, 516039, China
Factory	:	Huizhou Intelligent Energy Co., Ltd.
Address	:	8-9/F,Bldg.E2,Qunyi Industrial Park,Sanhe Avenue, Tonghu Town, Zhongkai High-tech Zone, HuiZhou, 516039, China

1.2. Description of Device (EUT)

Product Name	:	PORTABLE POWER STATION
Test Model No.	:	G1000Pro
Reference Model No.	:	N/A
Trade Mark	:	N/A
Test Power Supply	:	AC 120V, 60Hz for Adapter
Test Sample No.	:	1-2-1(Normal Sample), 1-2-2(Engineering Sample)
Adapter	:	Manufacturer: N-YECH ELECTRONICS.,LTD MODEL: NT-2400625D1 INPUT: 100-240V~50/60Hz 2.5A Max OUTPUT: 24.0V⎓ 6.25A 150.0W
RF Specification		
Operation Frequency	:	110.1-205kHz
Modulation Type	:	ASK
Antenna Type	:	Inductive loop coil Antenna
Antenna Gain(Peak)	:	0 dBi
Remark: 1) All of the RF specification are provided by customer. 2) For a more detailed features description, please refer to the manufacturer's specifications or the User's Manual.		

Rating(s):

PORTABLE POWER STATION

- Type: G1000Pro
- Battery Capacity: 22.2V, 45Ah/999Wh
- DC/PV Input: 12V-26V, 155W Max
- AC Output: Pure Sine Wave, 110V~60Hz, 1000W
- AC Parallel Interface: 1000W
- After Being Connected AC Output: 2000W
- DC Output ×2 + Cigarette Lighter Socket Output: Total 12V⎓10A
- USB-A Output ×3: 5V⎓3A, 9V⎓2A, 12V⎓1.5A, 18W Max
- USB-C Output: 5V/9V/12V/15V/20V⎓3A, 60W Max
- Wireless Charge: 10W
- Operating Temp: 14 to 104°F (-10 to 40°C)
- Charging Temp: 32 to 104°F (0 to 40°C)
- Manufacturer: Huizhou Intelligent Energy Co., Ltd.
- Date Code:

G1000ProM V1.1.00
3.06.04.0717

This device complies with part 15 of the FCC Rules. Operation is subject to the following two conditions: (1) This device may not cause harmful interference, and (2) this device must accept any interference received, including interference that may cause undesired operation.
FCC ID: 2BASNG1000MV1000

⚠ WARNING!

- Do not short-circuit the unit. To avoid short-circuiting, keep the unit away from all metal objects (e.g.coins, hair-pins, keys, etc.) .
- Do not heat the unit, or dispose of it in fire, water or other liquids. Keep away from high temperatures.
- Do not expose the unit to direct sunlight. Keep away from high humidity, dusty places.
- Do not disassemble or reassemble this unit.
- Do not drop and place heavy objects on, or allow strong impact to this unit.
- This appliance is not intended for use by persons (including children) with reduced physical, sensory or mental capabilities, or lack of experience and knowledge, unless they have been given supervision or instruction concerning use of the appliance by a person responsible for their safety.
- Children should be supervised to ensure that they do not play with the appliance.
- The unit may become hot when charging. This is normal. Be careful when handling.
- Use the unit properly to avoid electronic shock.
- The product is only used for emergency power station, it can not replace the standard DC or AC power of household appliances or digital products.
- Do not overcharge the internal battery. See Instruction Manual.

⚠ AVERTISSEMENT!

- Ne court-circuitez pas l'appareil. Pour éviter tout court-circuit, éloignez l'appareil de tout objet mé tallique (par exemple, pièces de monnaie, épingles à cheveux, clés, etc.).
- Ne chauffez pas l'appareil et ne le jetez pas dans le feu, l'eau ou d'autres liquides. Tenir à l'écart des températures élevées. N'exposez pas l'appareil à la lumière directe du soleil.
- Tenir à l'écart des endroits humides et poussiéreux.
- Ne démontez pas et ne réassemblez pas cet appareil.
- Ne laissez pas tomber, ne placez pas d'objets lourds dessus et ne laissez pas de chocs violents sur cet appareil.
- Cet appareil n'est pas destiné à être utilisé par des personnes(y compris des enfants) ayant des capacités physiques, sensorielles ou mentales réduites, ou un manque d'expérience et de connaissances, à moins qu'elles n'aient reçu une supervision ou des instructions concernant.
- L'utilisation de l'appareil par une personne responsable de leur sécurité.
- Les enfants doivent être surveillés pour s'assurer qu'ils ne jouent pas avec l'appareil.
- L'appareil peut devenir chaud pendant la charge. C'est normal. Soyez prudent lors de la manipulation.
- Utilisez l'appareil correctement pour éviter les chocs électroniques. Le produit n'est utilisé que pour la centrale électrique de secours, il ne peut pas remplacer l'alimentation CC ou CA standard des appareils ménagers ou des produits numériques.
- Ne pas surcharger la batterie interne. Consulter le manuel d'utilisation.

CE FC RoHs UN38.3
MADE IN CHINA
Li-ion

1.3. Auxiliary Equipment Used During Test

Description	Rating(s)
Wireless charging load:	Manufacturer: Shenzhen Ouju Technology Co., Ltd. M/N: CD2577 Power: 5W/7.5W/10W/15W

1.4. Description of Test Modes

To investigate the maximum EMI emission characteristics generates from EUT, the test system was pre-scanning tested base on the consideration of following EUT operation mode or test configuration mode which possible have effect on EMI emission level. Each of these EUT operation mode(s) or test configuration mode(s) mentioned above was evaluated respectively.

Pretest Mode	Description
Mode 1	Adapter & Wireless Charging Mode

For Conducted Emission	
Final Test Mode	Description
Mode 1	Adapter & Wireless Charging Mode

For Radiated Emission	
Final Test Mode	Description
Mode 1	Adapter & Wireless Charging Mode

Note:

(1) Test channel is 0.1483MHz.

(2) All the situation(full load, half load and empty load) has been tested,only the worst situation (full load 10W) was recorded in the report.

1.5. Description Of Test Setup

CE

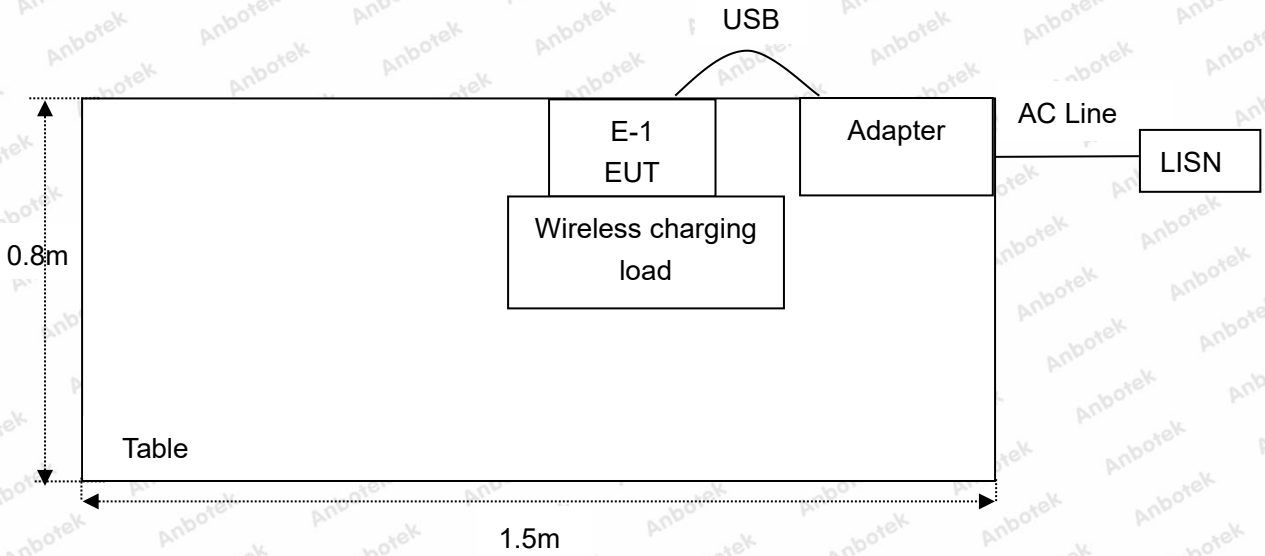

RE

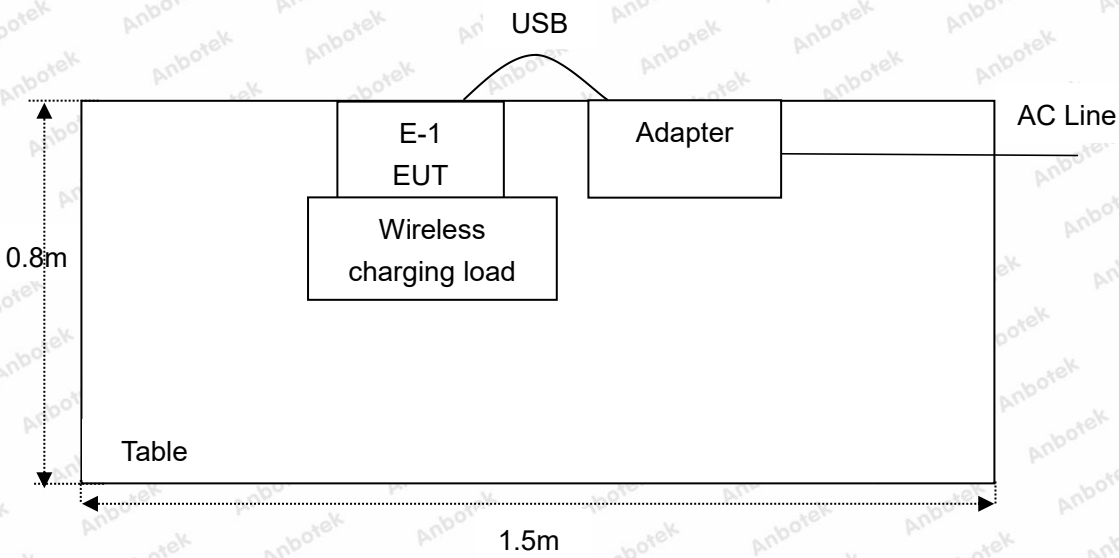

1.6. Test Equipment List

Item	Equipment	Manufacturer	Model No.	Serial No.	Last Cal.	Cal. Interval
1.	L.I.S.N. Artificial Mains Network	Rohde & Schwarz	ENV216	100055	Oct. 12, 2023	1 Year
2.	Three Phase V-type Artificial Power Network	CYBERTEK	EM5040DT	E215040DT001	Jul. 05, 2023	1 Year
3.	EMI Test Receiver	Rohde & Schwarz	ESCI	100627	Oct. 12, 2023	1 Year
4.	EMI Test Receiver	Rohde & Schwarz	ESR26	101481	Oct. 12, 2023	1 Year
5.	MXA Spectrum Analysis	Agilent	N9020A	MY51170037	Oct. 12, 2023	1 Year
6.	EMI Preamplifier	SKET Electronic	LNPA-0118G-45	SKET-PA-002	Oct. 12, 2023	1 Year
7.	Double Ridged Horn Antenna	SCHWARZBECK	BBHA 9120D	02555	Oct. 16, 2022	3 Year
8.	Bilog Broadband Antenna	Schwarzbeck	VULB9163	345	Oct. 23, 2022	3 Year
9.	Loop Antenna	Schwarzbeck	FMZB1519B	00053	Oct. 12, 2023	1 Year
10.	Horn Antenna	A-INFO	LB-180400-KF	J211060628	Oct. 12, 2023	1 Year
11.	Pre-amplifier	SONOMA	310N	186860	Oct. 12, 2023	1 Year
12.	EMI Test Software EZ-EMC	SHURPLE	N/A	N/A	N/A	N/A
13.	MXA Spectrum Analysis	KEYSIGHT	N9020A	MY53280032	Oct. 12, 2023	1 Year
14.	MXG RF Vector Signal Generator	Agilent	N5182A	MY48180656	Oct. 12, 2023	1 Year
15.	Signal Generator	Agilent	E4421B	MY41000743	Oct. 12, 2023	1 Year
16.	DC Power Supply	IVYTECH	IV3605	1804D360510	Oct. 20, 2023	1 Year
17.	Constant Temperature Humidity Chamber	ZHONGJIAN	ZJ-KHWS80B	N/A	Oct. 16, 2023	1 Year
18.	Spectrum Analyzer	Rohde & Schwarz	FSV40-N	101792	May. 26, 2023	1 Year

1.7. Measurement Uncertainty

Parameter	Uncertainty
Conducted emissions (AMN 150kHz~30MHz)	3.8dB
Radiated spurious emissions (Below 30MHz)	3.53dB
Radiated spurious emissions (30MHz~1GHz)	Horizontal: 3.92dB; Vertical: 4.52dB
The measurement uncertainty and decision risk evaluated according to AB/WI-RF-F-032. This uncertainty represents an expanded uncertainty expressed at approximately the 95% confidence level using a coverage factor of k=2.	

1.8. Description of Test Facility

The test facility is recognized, certified, or accredited by the following organizations:

FCC-Registration No.: 434132

Shenzhen Anbotek Compliance Laboratory Limited, EMC Laboratory has been registered and fully described in a report filed with the (FCC) Federal Communications Commission. The acceptance letter from the FCC is maintained in our files. Registration No. 434132.

ISED-Registration No.: 8058A

Shenzhen Anbotek Compliance Laboratory Limited, EMC Laboratory has been registered and fully described in a report filed with the (ISED) Innovation, Science and Economic Development Canada. The acceptance letter from the ISED is maintained in our files. Registration 8058A.

Test Location

Shenzhen Anbotek Compliance Laboratory Limited.
1/F, Building D, Sogood Science and Technology Park, Sanwei community, Hangcheng Street, Bao'an District, Shenzhen, Guangdong, China.

1.9. Disclaimer

1. The test report is invalid if not marked with the signatures of the persons responsible for preparing and approving the test report.
2. The test report is invalid if there is any evidence and/or falsification.
3. The results documented in this report apply only to the tested sample, under the conditions and modes of operation as described herein.
4. This document may not be altered or revised in any way unless done so by Anbotek and all revisions are duly noted in the revisions section.
5. Content of the test report, in part or in full, cannot be used for publicity and/or promotional purposes without prior written approval from the laboratory.
6. The authenticity of the information provided by the customer is the responsibility of the customer and the laboratory is not responsible for its authenticity.

The laboratory is only responsible for the data released by the laboratory, except for the part provided by the applicant.

2. Summary of Test Results

Standard Section	Test Item	Result
15.203	Antenna Requirement	PASS
15.207	Conducted Emission Test	PASS
15.205/15.209	Spurious Emission	PASS

3. Conducted Emission Test

3.1. Test Standard and Limit

Test Standard	FCC Part15 Section 15.207		
Test Limit	Frequency	Maximum RF Line Voltage (dBuV)	
		Quasi-peak Level	Average Level
	150kHz~500kHz	66 ~ 56 *	56 ~ 46 *
	500kHz~5MHz	56	46
	5MHz~30MHz	60	50
Remark: (1) *Decreasing linearly with logarithm of the frequency. (2) The lower limit shall apply at the transition frequency.			

3.2. Test Setup

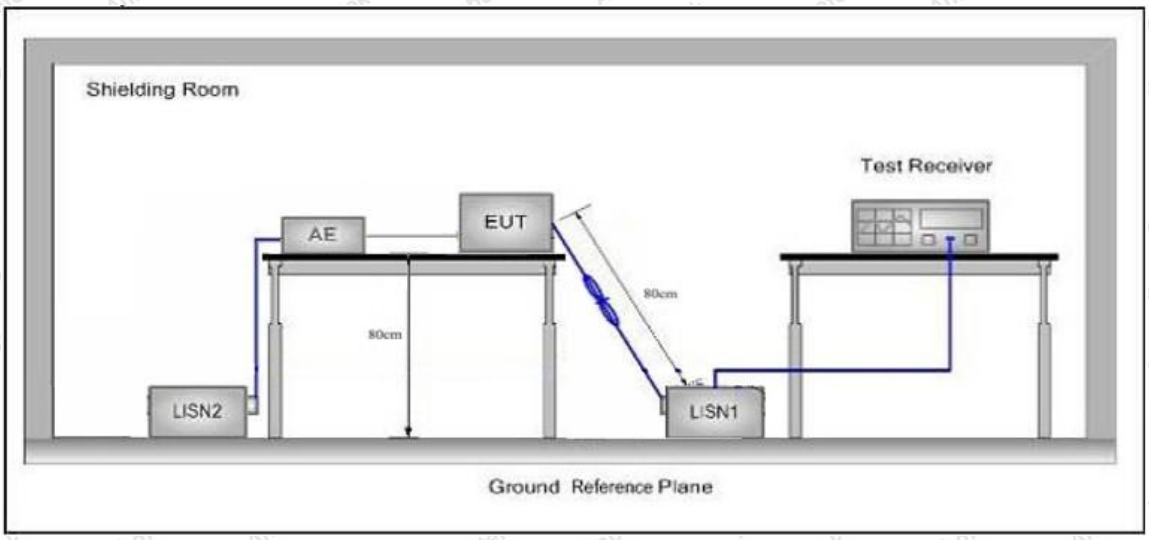

3.3. Test Procedure

The EUT system is connected to the power mains through a line impedance stabilization network (L.I.S.N.). This provides a 50ohm coupling impedance for the EUT system. Please refer the block diagram of the test setup and photographs. Both sides of AC line are checked to find out the maximum conducted emission. In order to find the maximum emission levels, the relative positions of equipment and all of the interface cables shall be changed according to FCC ANSI C63.10: 2020 on Conducted Emission Measurement.

The bandwidth of test receiver (ESCI) set at 9kHz.

The frequency range from 150kHz to 30MHz is checked.

3.4. Test Data

AC conducted emission pre-test at both at AC 120V/60Hz and AC 240V/60Hz modes, recorded worst case AC 120V/60Hz.

Please to see the following pages.

Conducted Emission Test Data

Test Site: 1# Shielded Room
Operating Condition: Mode 1
Test Specification: AC 120V, 60Hz for Adapter
Comment: Live Line
Temp.(℃)/Hum.(%RH): 23.5℃/49%RH

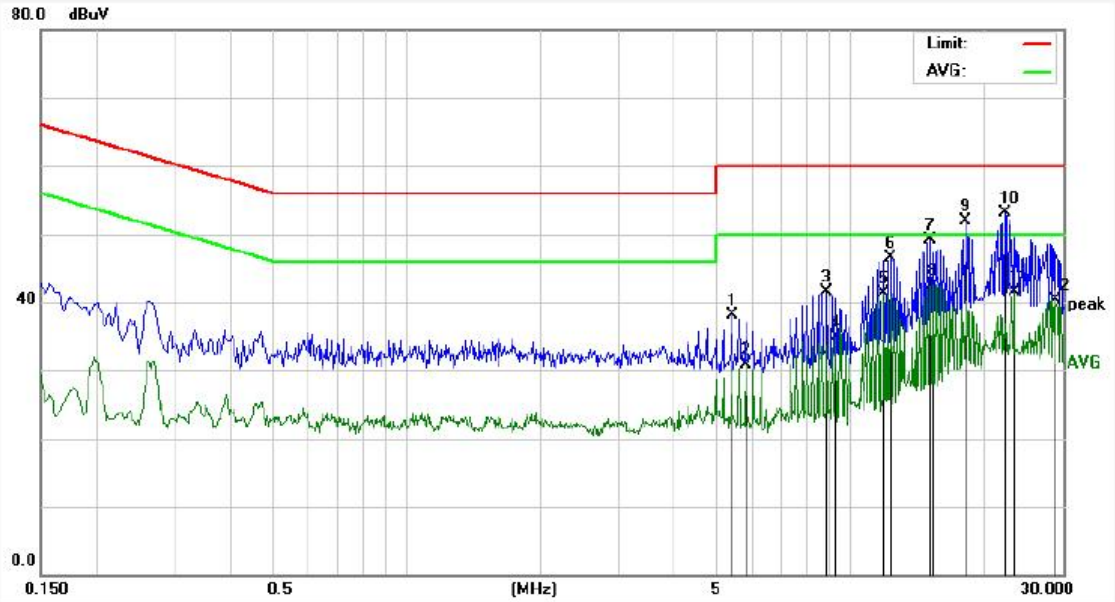

No.	Freq. (MHz)	Reading (dBuV)	Factor (dB)	Result (dBuV)	Limit (dBuV)	Over Limit (dB)	Detector	Remark
1	5.3978	19.30	18.81	38.11	60.00	-21.89	QP	
2	5.8299	12.03	18.81	30.84	50.00	-19.16	AVG	
3	8.8498	22.65	18.80	41.45	60.00	-18.55	QP	
4	9.2819	16.05	18.80	34.85	50.00	-15.15	AVG	
5	11.8739	22.41	18.81	41.22	50.00	-8.78	AVG	
6	12.3057	27.60	18.81	46.41	60.00	-13.59	QP	
7	15.1137	30.30	18.85	49.15	60.00	-10.85	QP	
8	15.3299	23.66	18.85	42.51	50.00	-7.49	AVG	
9	18.1377	32.94	18.88	51.82	60.00	-8.18	QP	
10	22.2377	34.24	18.87	53.11	60.00	-6.89	QP	
11	23.3180	22.71	18.86	41.57	50.00	-8.43	AVG	
12	28.9298	21.30	18.99	40.29	50.00	-9.71	AVG	

Conducted Emission Test Data

Test Site: 1# Shielded Room
Operating Condition: Mode 1
Test Specification: AC 120V, 60Hz for Adapter
Comment: Neutral Line
Temp.(℃)/Hum.(%RH): 23.5℃/49%RH

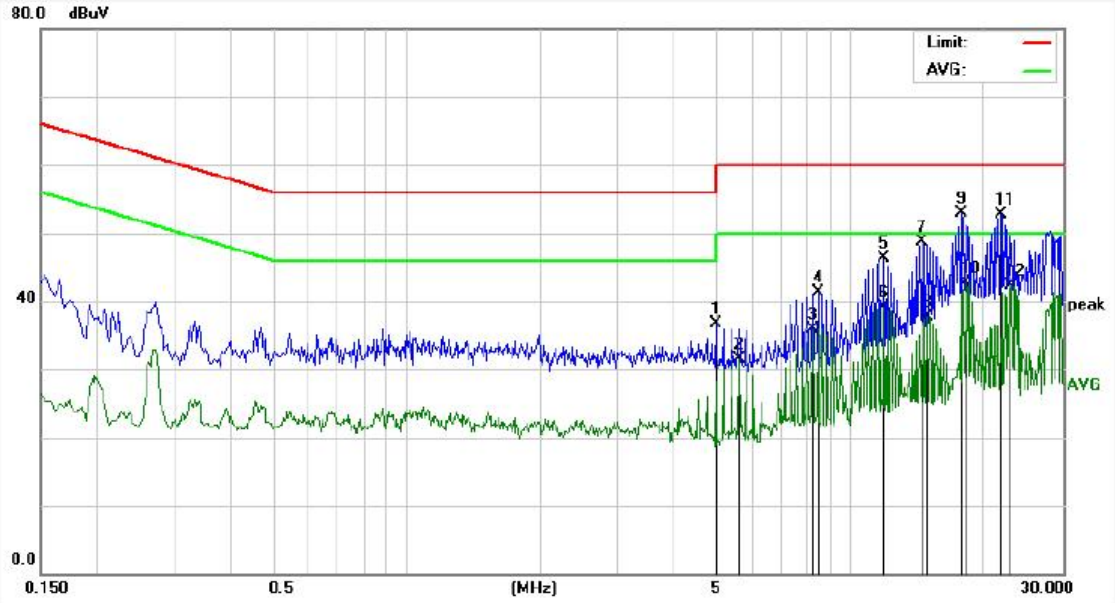

No.	Freq. (MHz)	Reading (dBuV)	Factor (dB)	Result (dBuV)	Limit (dBuV)	Over Limit (dB)	Detector	Remark
1	4.9659	17.87	18.81	36.68	56.00	-19.32	QP	
2	5.6139	12.66	18.81	31.47	50.00	-18.53	AVG	
3	8.2057	17.16	18.81	35.97	50.00	-14.03	AVG	
4	8.4219	22.45	18.81	41.26	60.00	-18.74	QP	
5	11.8779	27.46	18.81	46.27	60.00	-13.73	QP	
6	11.8779	20.21	18.81	39.02	50.00	-10.98	AVG	
7	14.4657	29.86	18.84	48.70	60.00	-11.30	QP	
8	14.9016	18.80	18.85	37.65	50.00	-12.35	AVG	
9	17.7056	34.02	18.88	52.90	60.00	-7.10	QP	
10	18.1376	23.86	18.88	42.74	50.00	-7.26	AVG	
11	21.8097	33.85	18.87	52.72	60.00	-7.28	QP	
12	22.8900	23.49	18.86	42.35	50.00	-7.65	AVG	

4. Radiation Spurious Emission

4.1. Test Standard and Limit

Test Standard	FCC Part15 C Section 15.209 and 15.205				
Test Limit	Frequency (MHz)	Field strength (microvolt/meter)	Limit (dBuV/m)	Remark	Measurement distance (m)
	0.009MHz~0.490MHz	2400/F(kHz)	-	-	300
	0.490MHz-1.705MHz	24000/F(kHz)	-	-	30
	1.705MHz-30MHz	30	-	-	30
	30MHz~88MHz	100	40.0	Quasi-peak	3
	88MHz~216MHz	150	43.5	Quasi-peak	3
	216MHz~960MHz	200	46.0	Quasi-peak	3
	960MHz~1000MHz	500	54.0	Quasi-peak	3
	Above 1000MHz	500	54.0	Average	3
		-	74.0	Peak	3

Remark:
(1)The lower limit shall apply at the transition frequency.
(2) 15.35(b), Unless otherwise specified, the limit on peak radio frequency emissions is 20dB above the maximum permitted average emission limit applicable to the equipment under test. This peak limit applies to the total peak emission level radiated by the device.

4.2. Test Setup

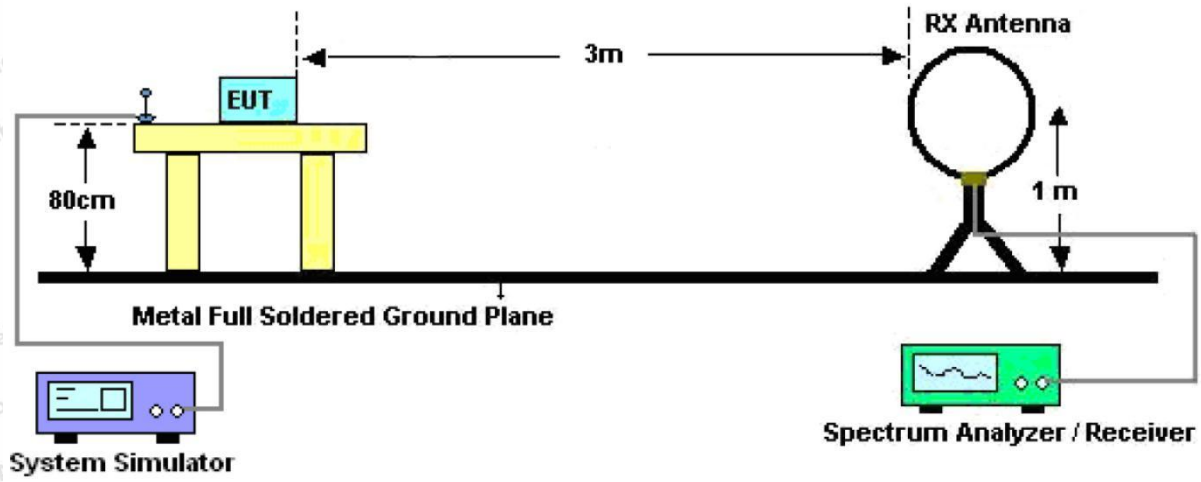

Figure 1. Below 30MHz

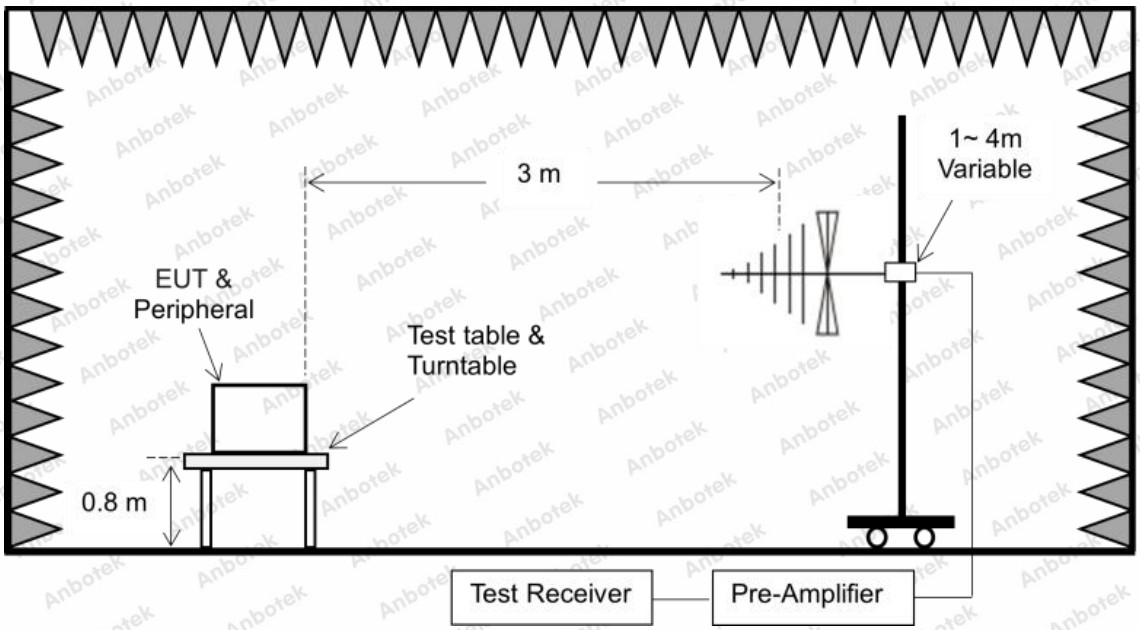

Figure 2. 30MHz to 1GHz

4.3. Test Procedure

For below 1GHz: The EUT is placed on a turntable, which is 0.8m above the ground plane.
The turn table can rotate 360 degrees to determine the position of the maximum emission level. The EUT is set 3 meters away from the receiving antenna which is mounted on a antenna tower. The antenna can be moved up and down from 1 to 4 meters to find out the maximum emission level. Rotated the EUT through three orthogonal axes to determine the maximum emissions, both horizontal and vertical polarization of the antenna are set on test. The EUT is tested in 9*6*6 Chamber. The device is evaluated in xyz orientation.

For 9kHz to 150kHz, Set the spectrum analyzer as:
RBW = 200Hz, VBW =1kHz, Detector= Quasi-Peak, Trace mode= Max hold, Sweep- auto couple.

For 150kHz to 30MHz, Set the spectrum analyzer as:
RBW = 9KHz, VBW =30kHz, Detector= Quasi-Peak, Trace mode= Max hold, Sweep- auto couple.

For 30MHz to 1000MHz, Set the spectrum analyzer as:
RBW = 100kHz, VBW =300kHz, Detector= Quasi-Peak, Trace mode= Max hold, Sweep- auto couple.

4.4. Test Data

PASS

During the test, Pre-scan all kind of the place mode (X-axis, Y-axis, Z-axis), and found the X-axis is the worst case.

Test Results (Between 9KHz – 150KHz)

Test Mode:	Mode 1
Distance:	3m
Power Source:	AC 120V, 60Hz for Adapter
Temp.(℃)/Hum.(%RH):	22.5℃/55%RH

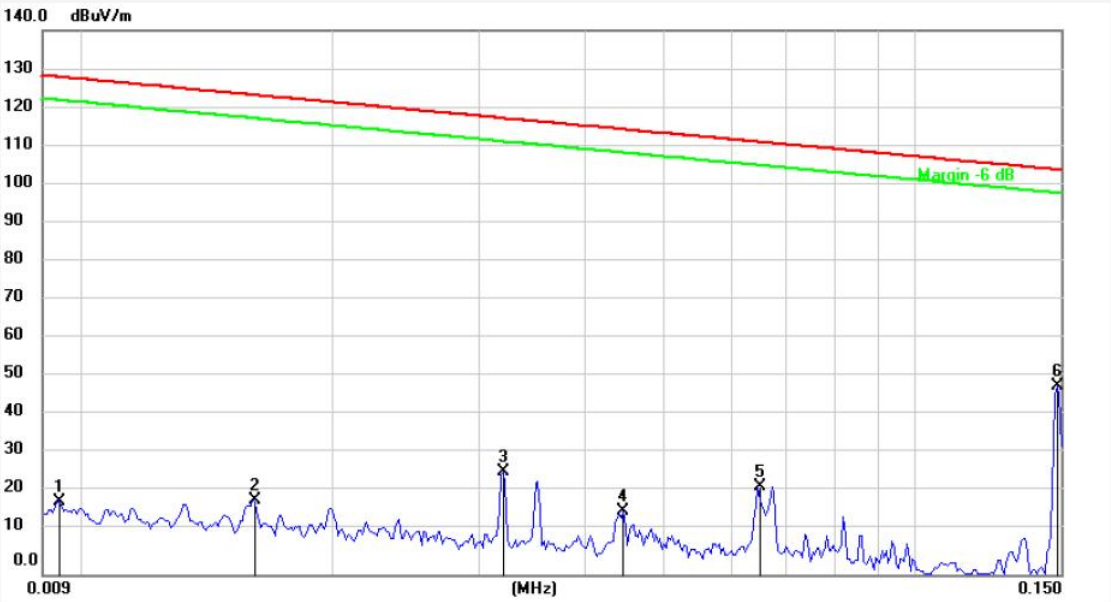

No.	Freq. (MHz)	Reading (dBuV)	Factor ()	Result (dBuV/m)	Limit (dBuV/m)	Over Limit (dB)	Detector	Height (cm)	degree (deg)	Remark
1	0.0094	-1.34	20.11	18.77	128.03	-109.26	QP			
2	0.0161	-1.29	20.28	18.99	123.37	-104.38	QP			
3	0.0321	5.96	20.56	26.52	117.39	-90.87	QP			
4	0.0447	-4.20	20.46	16.26	114.53	-98.27	QP			
5	0.0649	2.15	20.38	22.53	111.30	-88.77	QP			
6	0.1483	28.02	20.33	48.35	104.15	-55.80	QP			

Test Results (Between 0.15MHz – 30MHz)

Test Mode:	Mode 1
Distance:	3m
Power Source:	AC 120V, 60Hz for Adapter
Temp.(℃)/Hum.(%RH):	22.5℃/55%RH

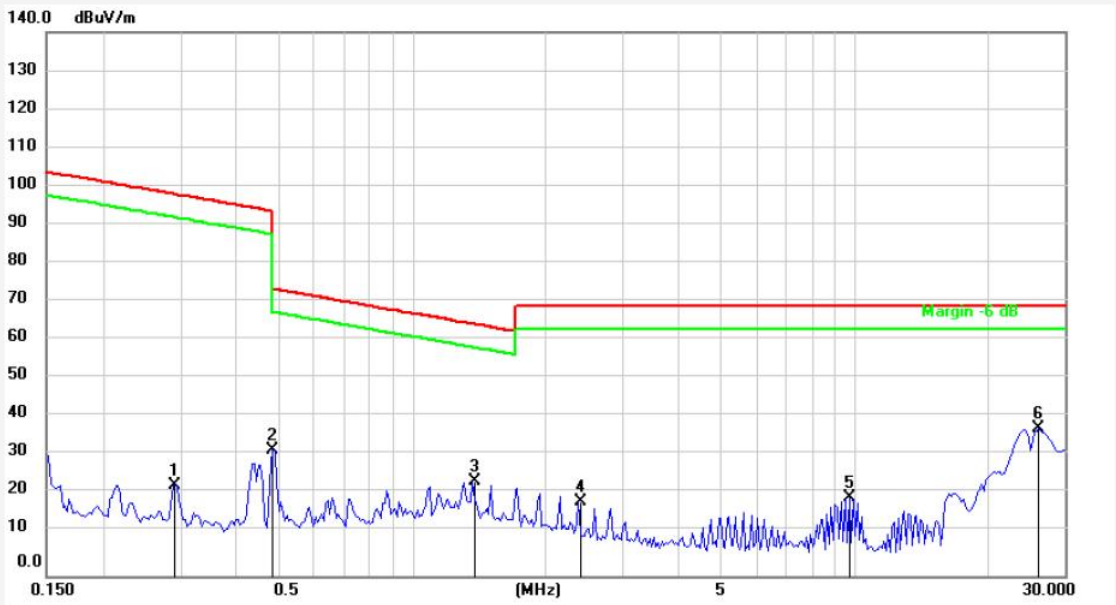

No.	Freq. (MHz)	Reading (dBuV)	Factor ()	Result (dBuV/m)	Limit (dBuV/m)	Over Limit (dB)	Detector	Height (cm)	degree (deg)	Remark
1	0.2923	3.05	20.30	23.35	98.26	-74.91	QP			
2	0.4863	11.95	20.27	32.22	93.87	-61.65	QP			
3	1.3738	4.10	20.26	24.36	64.87	-40.51	QP			
4	2.3836	-1.16	20.29	19.13	69.50	-50.37	QP			
5	9.7567	-0.33	20.51	20.18	69.50	-49.32	QP			
6	26.1393	17.18	20.68	37.86	69.50	-31.64	QP			

Remark: According to FCC PART 15.209 (d), the emission limits for the frequency bands 9–90 kHz, 110–490 kHz and above 1000 MHz, Radiated emission limits in these three bands are based on measurements employing an average detector.

Test Results (Between 30MHz –1000 MHz)

Test Mode: Mode 1

Distance: 3m

Power Source: AC 120V, 60Hz for Adapter

Polarization: Horizontal

Temp.(℃)/Hum.(%RH): 22.5℃/55%RH

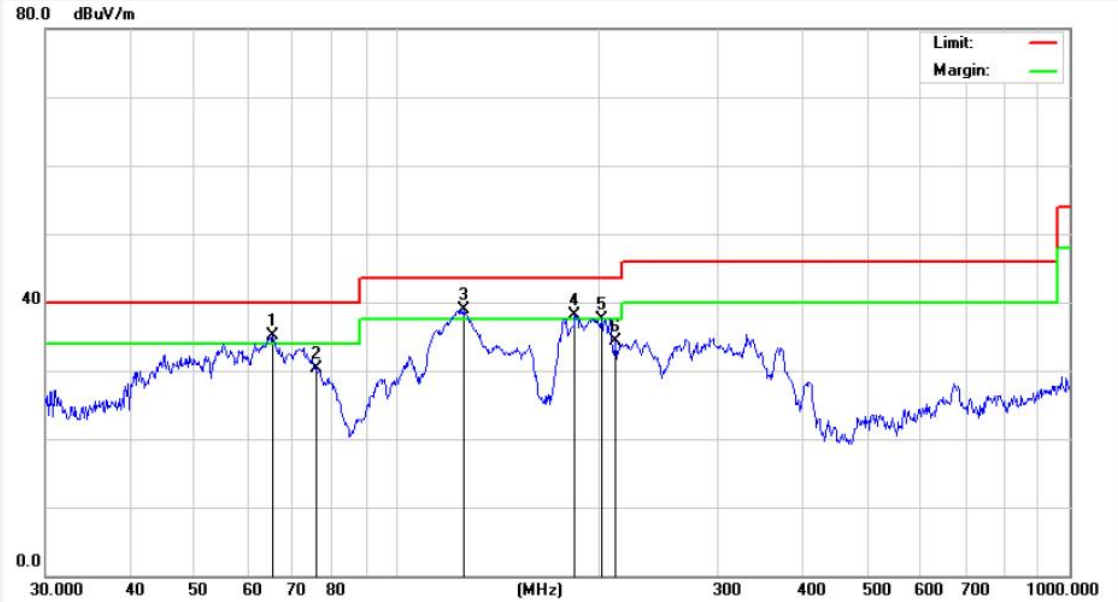

No.	Freq. (MHz)	Reading (dBuV)	Factor (dB/m)	Result (dBuV/m)	Limit (dBuV/m)	Over Limit (dB)	Detector	Height (cm)	degree (deg)	Remark
1	65.3431	54.53	-19.52	35.01	40.00	-4.99	QP			
2	75.7112	52.52	-22.18	30.34	40.00	-9.66	QP			
3	125.4457	62.04	-23.16	38.88	43.50	-4.62	QP			
4	183.8438	61.16	-23.02	38.14	43.50	-5.36	QP			
5	201.3930	59.91	-22.31	37.60	43.50	-5.90	QP			
6	211.5263	56.37	-22.13	34.24	43.50	-9.26	QP			

Test Mode: Mode 1
Distance: 3m
Power Source: AC 120V, 60Hz for Adapter
Polarization: Vertical
Temp.(℃)/Hum.(%RH): 22.5℃/55%RH

No.	Freq. (MHz)	Reading (dBuV)	Factor (dB/m)	Result (dBuV/m)	Limit (dBuV/m)	Over Limit (dB)	Detector	Height (cm)	degree (deg)	Remark
1	30.0000	51.15	-17.96	33.19	40.00	-6.81	QP			
2	38.7518	50.39	-15.20	35.19	40.00	-4.81	QP			
3	50.9420	48.23	-16.12	32.11	40.00	-7.89	QP			
4	64.6594	50.07	-19.19	30.88	40.00	-9.12	QP			
5	117.7724	56.74	-19.55	37.19	43.50	-6.31	QP			
6	140.3420	57.06	-22.18	34.88	43.50	-8.62	QP			

5. Antenna Requirement

5.1. Test Standard and Requirement

Test Standard	FCC Part15 Section 15.203
Requirement	1) 15.203 requirement: An intentional radiator shall be designed to ensure that no antenna other than that furnished by the responsible party shall be used with the device. The use of a permanently attached antenna or of an antenna that uses a unique coupling to the intentional radiator, the manufacturer may design the unit so that a broken antenna can be replaced by the user, but the use of a standard antenna jack or electrical connector is prohibited.

5.2. Antenna Connected Construction

The antenna is a Inductive loop coil Antenna which permanently attached, and the best case gain of the antenna is 0 dBi. It complies with the standard requirement.

APPENDIX I -- TEST SETUP PHOTOGRAPH

Please refer to separated files Appendix I -- Test Setup Photograph_RF

APPENDIX II -- EXTERNAL PHOTOGRAPH

Please refer to separated files Appendix II -- External Photograph

APPENDIX III -- INTERNAL PHOTOGRAPH

Please refer to separated files Appendix III -- Internal Photograph

---------- End of Report ----------