H300I 中性-美规 说明书

双向逆变 230.4Wh/256Wh

印刷要求（此页不印刷）

客户编码	中性版			
NO.	版本号	修订日期	变更/修改内容（ECN）	修订/审核人
0	V1.0	2024.02.20	初始版	
1				
2				
3				

印刷内容	H300 说明书 中性 美规 (双向逆变)	
产品规格	12.8V, 18Ah/230.4Wh	12.8V, 20Ah/256Wh
产品版本号	H300IM V2.0.00	H300IIM V2.0.00
物料编码	3.06.03.0370	
尺寸	142x210mm	
装订	骑马钉 20P	
材质	封面 157 克双铜纸，内页 157 克双铜纸	
编辑软件	**WPS Office2019 版（版式出现错乱，请使用该版本软件）**	
版本说明	美规 **H300IM V2.0.00 双向逆变 230.4Wh** H300IM V1.0.00 单向逆变 230.4Wh **H300IIM V2.0.00 双向逆变 256Wh** H300IIM V1.1.00 单向逆变 256Wh	欧规 H300IE V2.0.00 双向逆变 230.4Wh H300IE V1.0.00 单向逆变 230.4Wh H300IIEV2.0.00 双向逆变 256Wh H300IIE V1.1.00 单向逆变 256Wh
备注		

USER MANUAL

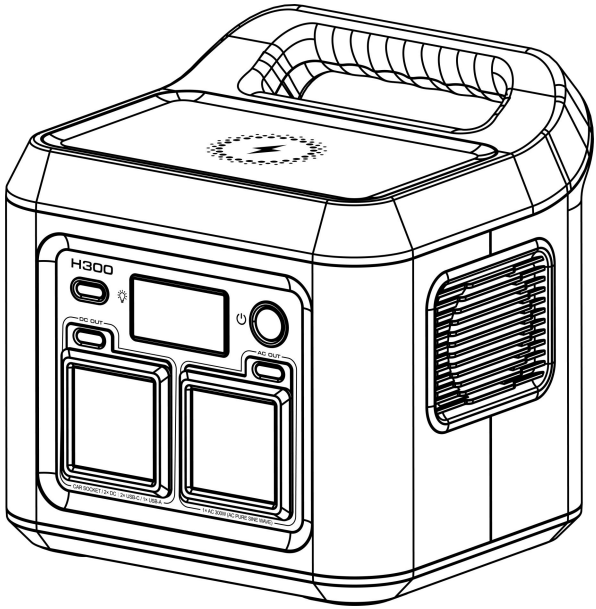

H300

Thank you for purchasing H300 Series high quality power station

To ensure your personal safety, Property safety and good user experience, Please read this User Manual carefully before operation and keep it for future reference.

⚠ Charging instructions

Before using your new Power Station H300 Series, plug it into a suitable power outlet until it is fully charged. Then you can start your exciting journey with it.

⚠WARNING
Please read the following instructions for safety before use. Improper use may result in fire, property damage or personal injury or death. DO NOT use the product with incompatible components or alter the product in any way.

⚠WARNING	⚠WARNING
Improper use may result in fire, property damage, or personal injury. Make sure to use the product according to the following safety rules and guidelines.	Do not expose the product to any liquid or submerge in water. If the battery comes into contact with water, it may cause chemical decomposition of the battery. This may cause the battery to catch fire or explode.

■ SAFETY INSTRUCTIONS

Read the following instructions to ensure safe usage:

⚠ DANGER	⚠ WARNING	⚠ CAUTION
Noncompliance may very likely lead to serious injury*or death. • DO NOT disassemble, repair or modify the unit or the battery. • DO NOT place the unit close to or in a fire or expose it to heat. Keep out of direct sunlight. • DO NOT charge, use or store the unit in a bathroom or in an area exposed to rain or moisture. Only use the output socket to power external devices. • Never connect the output to mains power under any circumstances. • DO NOT touch the unit or the plug in points if your hands are wet. • DO NOT connect any metallic objects to the AC input or output. • DO NOT rub your eyes if fluid from inside the unit should get in your eyes. • DO NOT dispose the unit together with household waste. • DO NOT use any inappropriate power cords. • DO NOT operate the unit above the specified input voltage. • DO NOT use the unit if it is not functioning correct. • DO NOT move the unit if it is recharging or in use.	Noncompliance may lead to serious injury** or death. • Use and store the unit only in a clean and dry environment. Do not use and store in dusty and wet environment. • Check the unit prior to every use. Do not use the unit if it is damaged, broken. • DO not use the unit if the power cord is damaged or broken. Keep the unit away from children. • DO NOT let children use the power supply unit. Keep this product away from pets. • DO NOT use or store the unit in an area or environment with high temperature. • Should fluid from inside of the unit come in contact with your skin or clothing, wash the affected areas with tap water. In a storm, unplug the power cord from the socket. • DO NOT charge the device through a power system other than the rated voltage. • DO NOT place the unit on its side or upside down while in use or storage. • DO NOT use accessories for other usage.	Noncompliance may lead to injuries and/or property damage** • If rust peculiar odors. overheating or other abnormal circumstances are observed, stop using the unit immediately and contact the dealer or our customer service center. • The unit complies with all legal requirements for transport of dangerous goods. • Make sure that the unit is properly secured when transporting it in a motor vehicle. • Only charge, use and store the unit within an ambient temperature of 0 to 40℃ (32 ~104℉). • Switch the unit off immediately if it has accidentally fallen, was dropped or was exposed to vibrations. • Once the unit is fully charged, unplug the AC charging cable. We is not liable for any damage caused by using different brand charging cables. • Use of different cables will void the products warranty and may cause damage or serious bodily injury.

Carefully read the instructions for the electric devices that you intend to connect to your power.

Product Maintenance:

1. Battery life may be reduced or become nonfunctional if not properly maintained.
2. Fully charge and discharge at least every 3 months to ensure battery life.
3. Do not store battery with less than 50% charge.

CONTENTS

- PRODUCT INTRODUCTION 1
- PRODUCT FUNCTION DESCRIPTION 1
- BUTTON INDICATOR 2
- LCD DISPLAY 3
- LIST OF FAULT CODES 5
- CHARGING FUNCTION DESCRIPTION 6
- TECHNICAL SPECIFICATIONS 8
- LOAD CAPACITY 9
- PACKING LIST 9
- OPERATING INSTRUCTIONS 10
- TRANSPORT INSTRUCTIONS FOR DANGEROUS GOODS 12
- TROUBLE SHOOTING 13
- PRODUCT MAINTENANCE 13
- FCC NOTE 14
- WARRANTY 15

■ PRODUCT INTRODUCTION

H300 Series with high capacity and high safety battery pack. It is very convenient for emergency off-grid demand such as sudden power failure, snowstorm or hurricane, outdoor tourism, outdoor operation, RV power supply, etc. There is perfect performance with great power output up to 300W, fast charging, high capacity and long cycle life.

■ PRODUCT FUNCTION DESCRIPTION

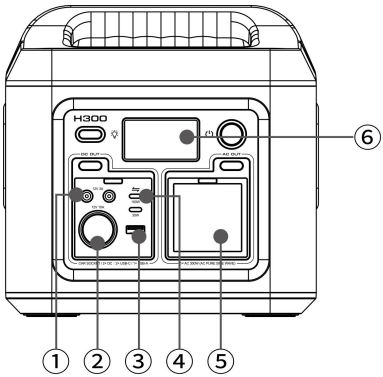

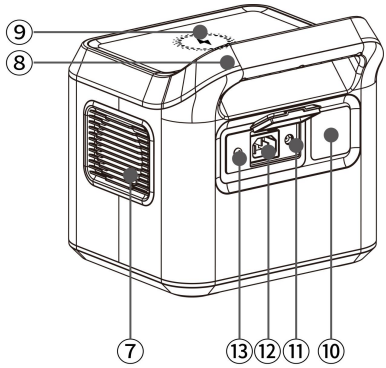

①DC Output
②Cigarette Lighter Socket Output
③USB-A Output
④USB-C Output
⑤AC Output
⑥LCD Screen Display
⑦Air Intake Vent with Cooling Fan
⑧Handle
⑨Wireless Charge
⑩LED Light
⑪DC/PV Input
⑫AC Input
⑬Grounding Port

⚠Reminder: If the battery with low power, please charges it before use.

■ BUTTON INDICATOR

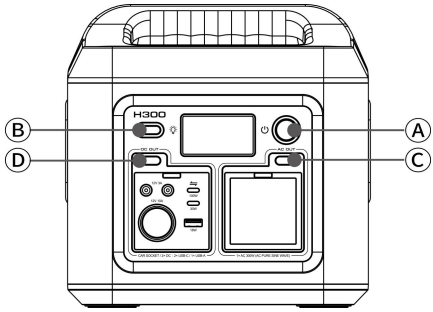

Button Ⓐ Power ON/OFF

Press button Ⓐ to turn on or turn off the equipment.

Wireless Charge

Press button "Power ON/OFF" Button to turn on the Wireless Charge.

Press button "Power ON/OFF" Button to shut down the output(s) when not in use.

Button Ⓑ LED Light

Function is available no matter the button "Power ON/OFF" is activated or not as the following steps: press button Ⓑ to turn on the LED light into the LED light mode. Thirdly, press button Ⓑ back to LED light mode, then press it again, the light will be turn off.

Button Ⓒ AC Output

Before press button Ⓒ to turn on, please make sure the "Power ON/OFF" is ON first.

To stop Output, press Ⓒ again.

Button Ⓓ DC/USB Output

Before press button Ⓓ to turn on, please make sure the "Power ON/OFF" is ON first.

To stop Output, press Ⓓ again.

Note: Different Devices with different USB-C cable agreement. If USB-C port not working, please confirm whether the product has electricity.

■ LCD DISPLAY

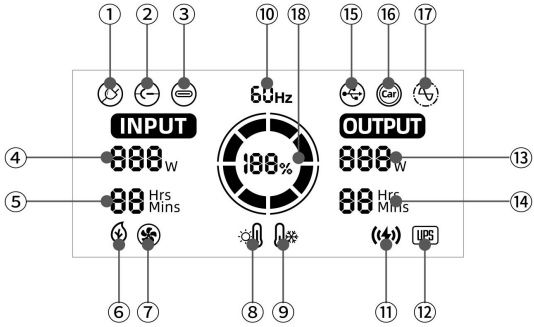

①	AC Input	When the AC charging cable is inserted, this label is displayed on the LCD.
②	DC Input	When the DC DC/SOLAR PV charging cable is inserted, this label is displayed on the LCD.
③	USB-C Input	When the USB-C charging cable is inserted, this label is displayed on the LCD.
④	Input Power	When charging, the display displays "INPUT" and charging power.
⑤	Input Time	When charging, the display shows full remaining time.
⑥	Quick Charge Switching	When the AC charging mode is used, the label is displayed when the charging mode is switched to slow charge.
⑦	Fan Start Cooling Status	When the fan is running, this label is displayed on the LCD.
⑧	High Temperature Alarm	When the inverter or battery pack temperature is too high, this label is displayed on the LCD.
⑨	Low Temperature Alarm	When the temperature of the inverter or battery pack is too low, this label is displayed on the LCD.

⑩	AC Output Frequency	When the AC switch is turned on, the display displays "OUTPUT" and the icon.
⑪	Wireless Charge	When the wireless charge output, this label is displayed on the LCD.
⑫	UPS Mode	When the device is in the AC charging state and the AC output is turned on, the UPS mode automatically starts and this label is displayed on the LCD.
⑬	Output Power	Displays the total used power of DC output, USB-A, USB-C, and AC output. ⚠Note: that this value can be adjusted multiple times as the energy consumption of the connected device changes. This is evident when the port is initially activated using a connected device.
⑭	Output Time	In the output state, the screen displays the remaining output time.
⑮	USB Output	When the USB output is turned on, the icon lights up and shows the total power used by the DC output, the current remaining time and frequency.
⑯	Cigarette Lighter Socket Output	When the Cigarette Lighter Socket Output is turned on, the icon lights up and shows the total power used by the DC output, the current remaining time and frequency.
⑰	AC Outputs	After the AC output switch is turned on, the icon lights up and displays the total ac output power, current remaining time, and current frequency.
⑱	Battery Level Indicator	Displays the current battery level in the form of energy circle + percentage. The main switch is turned on and the battery quantity is displayed. During the charging process, the energy circle is displayed dynamically.

■ LIST OF FAULT CODES

Fault code	Significance	solutions
E01	Battery over voltage	Please disconnect the charging cable and stop charging
E02	Battery under voltage	Please disconnect the output and charge the device
E03	Invert er overheating	Please disconnect the output and wait 1-2 hours before operation
E04	Abnormal input voltage	Please disconnect the charging cable
E05	Abnormal grid frequency	Please disconnect the charging cable
E06	Output voltage anomaly	Please contact customer service center
E07	Output short circuit	Please disconnect the output and check the electrical equipment
E08	Output overload	Please disconnect output
E09	Invert er failure	Please contact customer service center

⚠NOTE: When the DC load is abnormal, the system will automatically turn off the output and will not show the fault code. Please disconnect the output and check the electrical equipment then try again. When the USB load is abnormal, the corresponding output power will to be zero and the system will not show the fault code. Please disconnect the outputs and check the electrical equipment, then try again.

■ CHARGING FUNCTION DESCRIPTION

Re-charging time

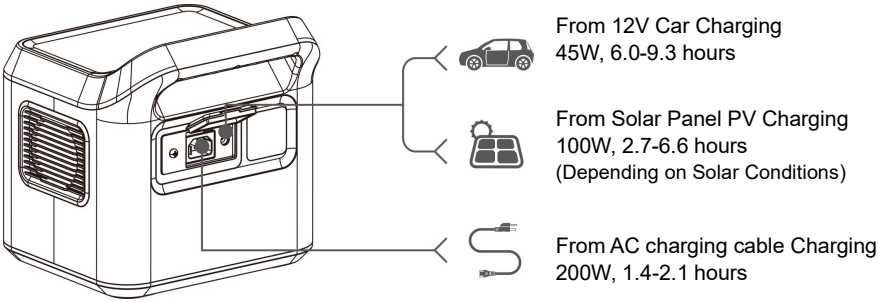

⚠**Reminder: If the battery with low power, please charges it before use.**

AC power adapter charging

Use the AC charging cable we provided to charge the device. It takes 1.4-2.1 hours to full capacity. When LCD showing battery power reached 100%,it means that battery has been full charged and input power will turn off in minutes.

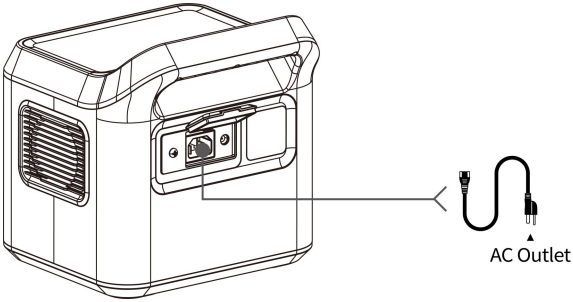

12V car charging

Use our car charging cable to charge. It takes 6.0-9.3 hours to fully charge. When the LCD shows that the battery power is 100%, it means that the battery is fully charged.

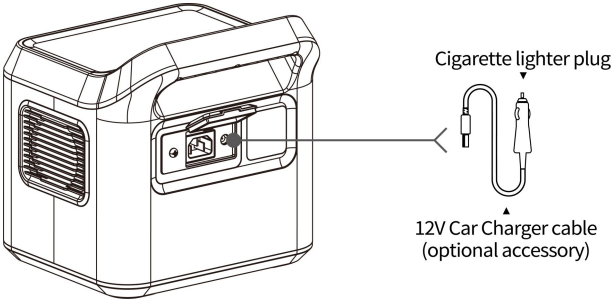

⚠**Caution: Do not charge the product with solar PV input and car port at the same time!**

Solar PV charging

Support 60W/100W solar panel charging, the charging time is determined by the sunlight intensity. Please place as many solar panels in direct sunlight as possible.

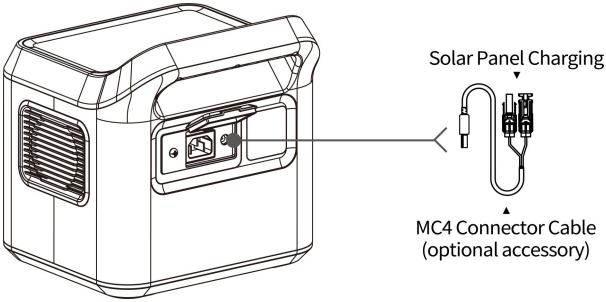

⚠**The total open circuit voltage of solar modules after series-parallel connection should not exceed the specified voltage! please confirm the same voltage specification.**

■ TECHNICAL SPECIFICATIONS

General parameters		
Battery Type	Lithium Iron Phosphate	
Rated Capacity	12.8V, 18Ah/230.4Wh	12.8V, 20Ah/256Wh
Net Weight	≈4kg	
Product Size	222mm*208mm*224mm	
Operating Temp	14 to 104℉ (-10 to 40℃)	
Charging Temp	32 to 104℉ (0 to 40℃)	
Storage Temp	-4 to 113℉ (-20 to 45℃)	

Input	
AC Input	100V-130V~1.7A, 60Hz, 200W Max
USB-C Input	5V/9V/12V/15V/20V⎓ 3A, 20V⎓ 5A, 100W Max
DC/PV Input	DC 12V-26V⎓ 8A, 100W Max

Output		
AC Output Voltage×1	120V~60Hz	
Rated Output Power	300W	
Output Waveform	Pure Sine Wave	
UPS Switching Time	10ms	
Cigarette Lighter Socket Output	12V⎓ 10A	Total 12V⎓ 10A
DC Output×2	12V⎓ 3A (Each)	
USB-A Output×1	5V⎓ 3A, 9V⎓ 2A, 12V⎓ 1.5A, 18W Max	
USB-C Output×1	5V/9V⎓ 3A, 12V⎓ 2.5A, 30W Max	
USB-C Output×1	5V/9V/12V/15V/20V⎓ 3A, 20V⎓ 5A, 100W Max	
Wireless Charge	10W	
LED Light	3W	

■ LOAD CAPACITY

Laptops (41.4Wh) Around 4.7 Recharges	32" TV (60W) Around 3.3 hours	CPAP without heated humidifier (15W) 13 hours	GoPro (5.9Wh) Around 33 Recharges	Floodlight (5W) Around 65 hours
Mini Fridge (40W) Around 4.9 hours	DJ Drone (89.2Wh) Around 2.2 Recharges	Smart phone (10Wh) Around 19.6 Recharges	Switch (16Wh) Around 12 Recharges	**+MORE**

⚠ **Data reference conversion efficiency is 85%, due to the environment and use method will fluctuate, the data is for reference only.**

■ PACKING LIST

Principal machine / User manual / AC charging cable / MC4-7909 Connector Cable (optional accessory) / 12V Car Charger cable (optional accessory)

Principal machine	User Manual	AC charging cable	MC4-7909 Connector Cable (optional accessory)	12V Car Charger cable (optional accessory)

.

■ OPERATING INSTRUCTIONS

Power output attention

Press output switch to select the desired outlet type. The output port must press the corresponding button to activate the port. When activated, the LCD display will turn on and provide detailed information about the charging output. When no output is activated, the LCD screen will automatically turn off.

Overload condition

When all outputs are short-circuited, the device automatically turns off the output power. The code "E07" will be displayed on the LCD screen.

When all outputs are overloaded, the device will automatically cut off the output power. The code "E08" will be displayed on the LCD screen.

Discharging

Press the "Power on/off" button for 1 seconds to turn on the device. Press the "Power on/off" button for 3 seconds to turn off the device. The device uses an advanced battery management system that allows it to charge the connected device through AC or DC output or USB output.

How to switch frequency?

The device can intelligently identify the frequency of voltage when charging, and can automatically set the frequency, so please charge before using. After plugging in the charging cable, the display will show the frequency of current grid voltage if it displays "50", it is 50Hz, if it displays "60", it is 60Hz.

You can also manually set and change the voltage frequency. Before using the power station, please confirm the voltage frequency of your electrical equipment, 50 Hz or 60 Hz?

Then press the "Power on/off" button for 1 seconds to turn on the device. If "50" is displayed on the LCD, it means that the operating frequency of the power station is 50 Hz. If' 60' is displayed on the LCD screen, it means 60 Hz.

If the frequency displayed on the LCD display does not match the frequency of the local power grid, you must change the frequency according to the following steps:

Step 1: press the button 'Power on/off' for 3 seconds to power off (the LCD display screen will turn off). Step 2: keep pressing the button 'AC on/off' with your right finger first and then press the button 'Power on/off' for 1 seconds with your left finger, then release the both fingers off the buttons. You will see the frequency.

Cooling fan

The equipment is designed with an internal cooling fan to ensure that the product runs within the proper temperature range. When the device experiences a high output load, it will automatically turn on the fan. During discharging and charging, the fan may run intermittently to keep the internal temperature within the operating range. When the AC circuit is activated, the fan is likely to start to ensure normal operation.

Power saving sleep mode

① No charging (AC input + PV), no discharging (DC + USB + AC). When charging is not connected and only the main switch is turned on: sleep after 5 minutes.

②Any charging is connected (regardless of whether there is power), and it does not sleep.

③Without any charging input,USB <5W, DC <5W, AC <25W, three conditions are met at the same time, and sleep after a delay of 8 hours.

④The self-consumption of whole machine is less than 5mA after shutting down all switch and sleeping.

⑤Please turn off the main power switch during transportation or it will not be used for a long time. Self-consumption after switching off is less than or equal to 200 μA.

Equipment cleaning

Please make sure that the device is disconnected from all input power and output devices. Wipe with a clean, dry, non-soft cotton cloth. Remove all any foreign objects, dirt or other obstructions on the vents on both sides. While cleaning foreign objects in the side vents, do not allow debris, dirt or other blockage to enters the equipment.

Do not use corrosive cleaners or solvents.

Do not use compressed air to clean the side cooling vents, as it will cause foreign particles to enter the interior and cause a short circuit.

⚠**Note: To avoid the risk of electric shock, do not use metal objects to clean the ports.**

Storage

If it will be stored for more than 1 month, please charge it to 50% capacity and keep it indoors, at normal temperature, and the maximum storage time shall not exceed 6 months. Please keep it away from direct sunlight.

Excessive temperature will lead to reduced service life, overheating and fire. Extremely cold conditions below the specified storage range can also impair the performance and service life of the equipment. Please keep away from corrosive chemicals and gases.

After taking it out of storage, perform a visual inspection to ensure that the appearance of the equipment and all accessories are qualified. Check the vents on the intake and exhaust sides to make sure they are free of foreign objects.

■ TRANSPORT INSTRUCTIONS FOR DANGEROUS GOODS

	Not permitted on aircraft		Avoid dropping
	To preserve the battery lifespans, please use and recharge at least once every 3 months		Do not disassemble
	Use an original or certified charger or cable		It's not waterproof, do not expose to liquids
	Avoid extreme temperature		Please dispose of batteries and electronic goods in accordance with local regulations

⚠ The H300 Series power station meets all legal requirements for the transportation of dangerous goods. The capacity of the lithium battery pack exceeds 100Wh. According to international standards, if the power station is transported by air, it must be transported in accordance with IATA standard packaging. The instructions and labeling requirements of the International Air Transport Association and related declarations must be completed.

■ TROUBLE SHOOTING

The device does not discharge

①Check whether the connecting wire has been inserted in right place;

②Check whether the total output power exceeds the rated output power;

③Check whether the temperature of the equipment is too high.

The device is not charging

①Confirm that the AC socket on the wall and the AC charging cable are fully inserted into the AC input terminal;

②The device cannot be charged immediately after it is discharged. Please put it aside for an hour and try again, because it may enter the over-temperature protection.

■ PRODUCT MAINTENANCE

Maintenance

Check as needed. If the H300 Series power station cannot working regularly, please charge and discharge it every 3 months under normal temperature to keep the service life. Regularly check all ports and wall chargers for any debris, dirt, damage, and corrosion.

Do not disassemble the device privately.

Do not cover the equipment with towels, clothes or other items. Regularly observe the side vents for dust and foreign matter, and clean them according to the cleaning procedures specified in the manual.

Disposal/recycling

Do not put the device and its accessories in the trash can. Items must be properly handled in accordance with local laws and regulations. For additional information, please see www.epa.gov.

Affirm

Copyrighted equipment. We all rights reserved. All trademarks cited here are the property of their respective owners. The information contained in this agreement is subject to change without notice. The we is not responsible for technical or editorial errors or omissions contained in this agreement. First Edition: January 2023

■ FCC NOTE

Any changes or modifications not expressly approved by the party responsible for compliance could void the user's authority to operate the equipment.

This equipment has been tested and found to comply with the limits for a Class B digital device, pursuant to Part 15 of the FCC Rules. These limits are designed to provide reasonable protection against harmful interference in a residential installation. This equipment generates, uses and can radiate radio frequency energy and, if not installed and used in accordance with the instructions, may cause harmful interference to radio communications. However, there is no guarantee that interference will not occur in a particular installation.

If this equipment does cause harmful interference to radio or television reception, which can be determined by turning the equipment off and on, the user is encouraged to try to correct the interference by one or more of the following measures:

- Reorient or relocate the receiving antenna.
- Increase the separation between the equipment and receiver.
- Connect the equipment into an outlet on a circuit different from that to which the receiver is connected.
- Consult the dealer or an experienced radio/TV technician for help.

This equipment complies with FCC radiation exposure limits set forth for an uncontrolled environment. This equipment should be installed and operated with minimum distance 20cm between the radiator &
your body.

FCC ID: 2BASNH300MV1000

■ WARRANTY

We assure the original purchaser that our products are free of defects in workmanship and materials during the applicable warranty period determined in the "Warranty Period" section below, but the exclusions set below is excluded.

This warranty statement sets total and exclusive obligations of us. We will not assume, nor authorize any person to assume for us any other liability related to the sale of our products.

Warranty time

The warranty is 12 months, and the warranty period is calculated by the original consumer purchaser from the date of purchase. In order to determine the start date of the warranty period, a sales receipt from the first consumer purchase or other reasonable documentary proof is required.

Repair processing

We will repair or replace any products that cannot be operated due to defects in workmanship or materials within the applicable warranty period. If a valid claim is filed within the applicable period, we can choose:

(1) Replacement product.

(2) It can be exchanged with products of equal value. The replacement product bears the remaining warranty period of the original product or replaces it (90) days from the date of warranty, whichever is greater. The customer is responsible for the shipping cost of the return.

Exclusions

The warranty of H300 Series does not apply to 1) any product that is modified, misused, abused, damaged by accident, or used for anything other than normal consumer use as authorized in current product literature or 2) any product purchased through an online auction house. The warranty of H300 Series does not apply to the battery cell unless the battery cell is fully charged by you within seven days after your purchase the product and at least every 6 months thereafter.

After-sales service

For after-sales maintenance service, please contact our customer service team.

Due to constant technology update, product specifications and configuration changes,

please refer to the actual product.

H300IM V2.0.00
H300IIM V2.0.00
3.06.03.0370