说明书制作要求
此页不印刷

客户文件编码				
NO.	版本号	修改日期	变更/修改内容(ECN)	修订/审核人
1	V1.5	20230214	P6页 太阳能输入 DC18-26V 改为 DC12-26V	
2			P7页 输入改为 AC200-240V 和 DC12-26V 车充输出改为12V10A	
3	V1.6	20230621	P4页 AC Output Voltage 修改为 60Hz	
	V1.7	20230726	P12页 修改FCC ID	

印刷内容：RC1000 说明书-中性-美规
产品规格：22.2V, 23.4AH/519.48Wh
产品版本：RC1000M V1.1.00
物料编码：3.06.03.0214

——

文件尺寸：142*210mm
印刷尺寸：142*210mm

钉装：骑马钉 16P
材质：128g/157g 双铜纸

Intelligent Energy
Power Station Solutions

RC1000

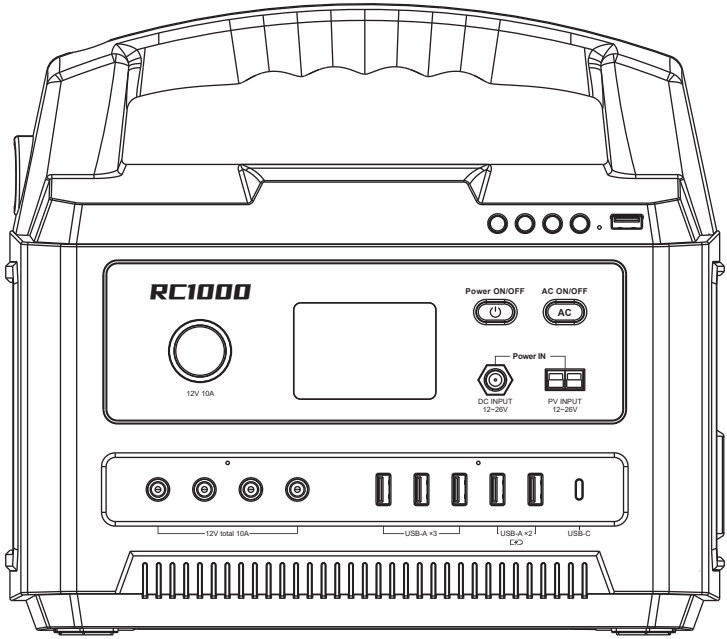

USER MANUAL

Thank you for purchasing portable power station.

For the best performance and safety purposes, please read this manual carefully before use. Please keep this manual for further reference.

⚠ CHARGE FIRST!

Before using your new portable power station or after storing it for more than 3 months, plug it into a suitable power outlet until it is fully charged. Then you can start your exciting journey with it. Highly recommend to charge when battery indicate less than 20%.

■ Product Overview

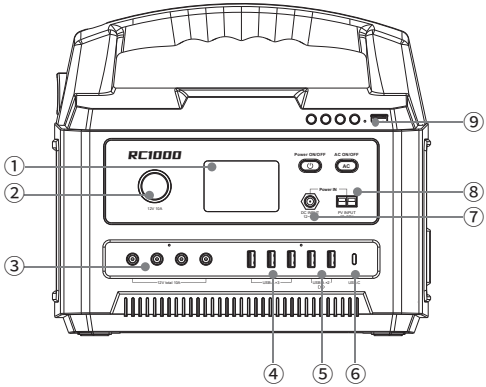

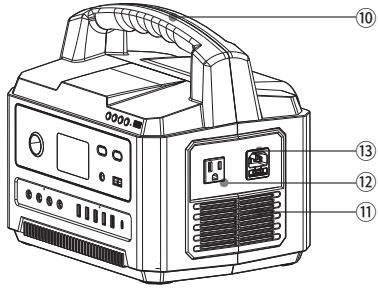

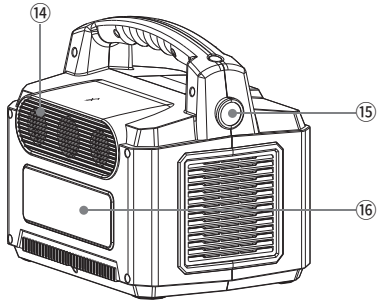

① LCD Screen Display
② Cigarette Lighter Socket Output
③ DC Output
④ USB-A Output
⑤ USB-A 18W Output
⑥ USB-C Output
⑦ PV Input
⑧ DC Input
⑨ USB Disk Port
⑩ Folding Handle
⑪ Air Intake Vent With Cooling Fan
⑫ AC Output
⑬ AC Input
⑭ Loudspeakers (Blue Tooth)
⑮ SOS Mode & LED Light
⑯ Reading Light

Note: No user-serviceable parts inside.
Recommended to fully charge before use.

■ Accessory List

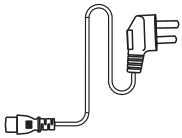	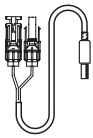	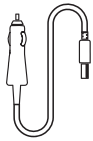	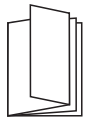
AC Power cord	MC4-7909 connector cable (optional accessory)	12V Car Charger cable (optional accessory)	User Manual

Recommend to use 100W/120W/200W Solar panel (not included).

■ Button Feature

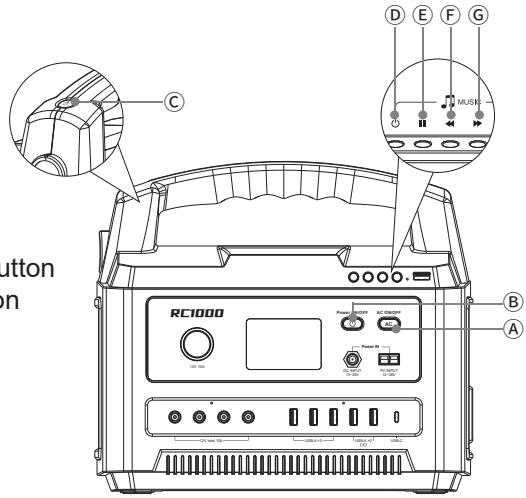

Ⓐ Power ON/OFF Button
Ⓑ AC Output Power ON/OFF Button
Ⓒ SOS Mode & LED Light Button
Ⓓ Bluetooth Speaker
Ⓔ Start/Stop Playing
Ⓕ Prev Song
Ⓖ Next Song

- **Button Ⓐ: POWER ON/OFF**
- Button Ⓐ is the master switch. Press Button Ⓐ to turn on the power or to shut down the output(s) when not in use.

- **Button Ⓑ: AC OUTPUT POWER ON/OFF**
- Pls. make sure the button “POWER ON/OFF” is activated before pressing Button Ⓑ to turn on.
  Press Button Ⓑ to shut down the output(s) when not in use.

- **Button Ⓒ: SOS MODE& LED LIGHT**
- Function is available no matter the Button “POWER ON/OFF” is activated or not as the following steps:
  Firstly, press Button Ⓒ to turn on the LED light into the LED light mode.
  Secondly, double click it to turn on the SOS mode.
  Thirdly, press Button Ⓒ back to LED light mode, then press it again, the light will be turn off.

- **How to open the music? (ⒹⒺⒻⒼ)**
- **Listen to music on the mobile phone by blue-tooth**
  Firstly, click the “POWER ON/OFF” button to open the unit, then press the “Bluetooth Speaker” button for 3 seconds to open the blue-tooth and the music.
  Secondly, click the “setting” figure of the mobile phone.
  Thirdly, click the “blue-tooth” figure you will find the device “Bluetooth” and then make a pair to connect with each other, fourthly, play the media on the mobile phone.

- **Listen to music on the USB disk**
  Please plug in the USB disk with music files to the USB disk port, then press the button Ⓔ to start/stop playing the song and then press the button Ⓕ to listen to the previous song and press the button Ⓖ to listen to the next song.

- **How to close the blue-tooth and the music?**
  Please press the "Bluetooth Speaker" button for 3 seconds to close the blue-tooth and the music.

COOLING FAN

- Utilizes an internal cooling fan to ensure the product is operating within the appropriate temperature range.
  When it experiences a higher output load, will automatically turn on the fan during discharge or recharging, the fan may operate intermittently to keep internal temperature within operating range.
  The fan will likely start when the AC circuit is activated to ensure proper operation.

■ LCD Features

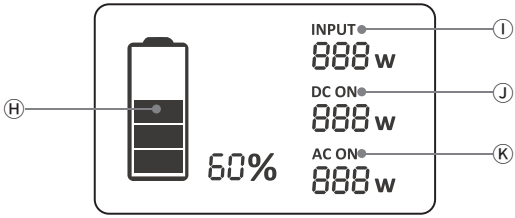

Ⓗ Battery Level Indicator
Ⓘ Input Status
Ⓙ DC Outputs Status
Ⓚ AC Outputs Status

Note:

- The LCD Screen will enter Sleep Mode after 20s of inactivity, and will Wake up when inputting a charging cord or when any button is pressed.

- When the output power of the device is less than 5W, the device will go into hibernation after more than 3 hours, and the input can be "awakened" when the input is charged or any button is pressed. When not in use, press the switch button to turn off the output.

■ General Specifications

General Specs			
	Rated Capacity	999Wh	
	Net Weight	about 8.8kg	
	Weight (including accessories)	about 9.8kg	
	Product Size	314 x 235 x 276mm	
Input			
	Recharging Input Voltage	12-26V	
	Recharging Input Power	155W Max	
	AC/DC Adapter	AC96-130V 50Hz, 500W Max	
	Solar Charge Input	DC12-26V, 155W Max	
	Car Charger	DC12V, 155W Max	
Output			
	AC Output Voltage	110V±10%/60Hz	
	Rated Output Power	1000W	
	Output Waveform	Pure Sine Wave	
	Overload Protection Power	1100W±80W	
	Cigarette Lighter Socket Output	12V⎓10A	Total 10A
	DC Output x 4	12V⎓5A	
	USB Output x 3	5V⎓2.1A,10.5W Max	
	USB Output x 2	5V⎓3A, 9V⎓2A, 12V⎓1.5A,18W Max	
	Type-C Output	5V/9V/12V/15V/20V⎓3A, 60W Max	
	LED Lighting	Reading Light 6W, SOS/LED Light 2W	
Battery			
	Standard Capacity of Batteries	22.2V, 45Ah/999Wh	
	Operating Temp	14 to 104°F (-10 to 40°C)	
	Charging Temp	32 to 104°F (0 to 40°C)	
	Storage Temp	-4 to 113°F (-20 to 45°C)	

■ How to Charge

Do not connect device via ac output port while charge.
recommend to disconnect when fully charged

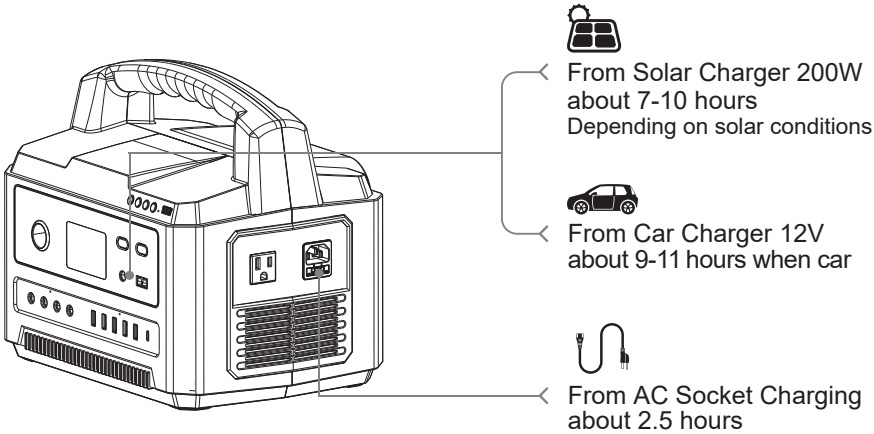

■ AC Adapter Charging

Please use the AC power cord that we provided to charge this unit,
and it will take about 2.5 hours to fully charge the power station.

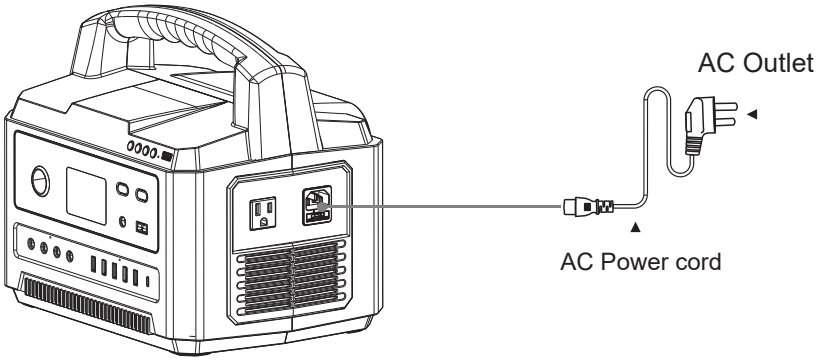

■ Solar Panel Charging

1. DO NOT charge the unit via solar panel that operate voltage outside of DC12-26V.
2. Place Solar Panels in direct sunlight as much as possible.
3. Support 100W/120W/200W Max Solar Panels (Not included), the charging time is determined by the solar light intensity.

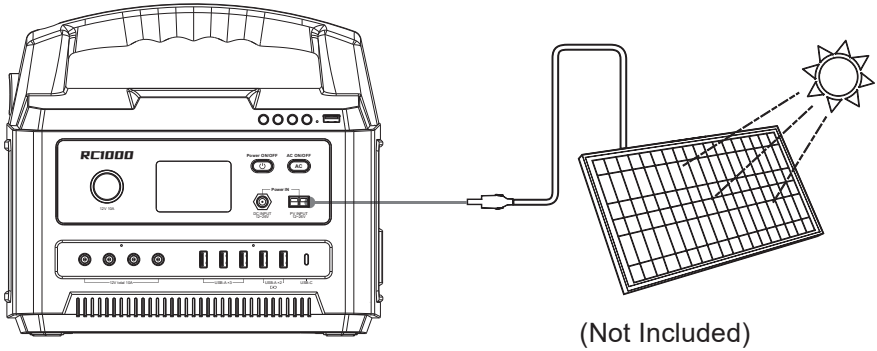

(Not Included)

■ 12V Car Charger Charging

Use the car charge cable we provided to charge this unit. The time to takes 9-11 hours. When the LCD screen shows the battery power to 100%, it indicates that this unit is fully charged.

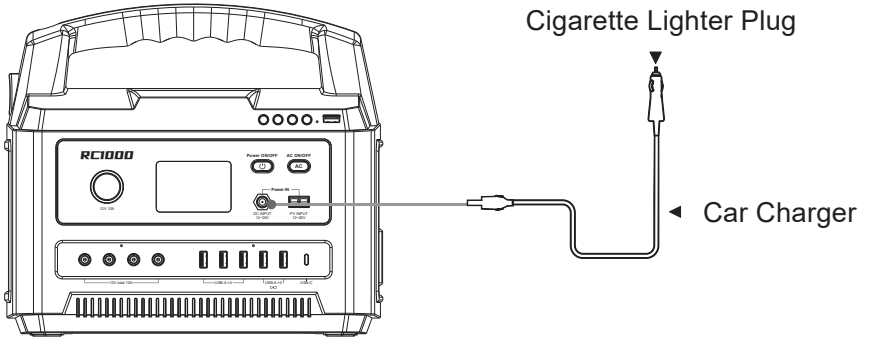

■ Power/Charge Devices with

1. Select the type of outlet required by pressing the output ON/OFF button. The output port will NOT function until the appropriate button is pressed. When activated, the indicator on the button shows green, indicating that the outputs are active, and the LCD screen will turn on and provide details on the charging output. The LCD screen will automatically shutdown when no outputs are activated.

2. PASS-THROUGH CHARGING
   The advanced battery management system of the allows it to charge a connected device via DC output & USB output while charging.
   Note: Do Not connect devices via AC output while charging.

3. OVERLOAD CONDITION
   If an overload condition occurs on the output port, it will automatically turn off AC output power. The blue indicator light of LCD screen is still illuminated. DC output status is still the same status as usual. In this case, please check the input cable. The port will be efficient when the input charge cable meets the specification outlined in the GENERAL SPECIFICATIONS section. Only charge with provided AC power cord to charge.

■ What it Powers

Laptops (41.4Wh) **Around** **21.7 Recharges**	32" TV (60W) **Around** **15 Hours**	CPAP Without Heated Humidifier (15W) **59.9 Hours**	Gopro (5.9Wh) **Around** **152 Recharges**	Floodlight (6W) **Around** **150 Hours**
Mini Fridge (40W) **Around** **22.5 Hours**	Drone (89.2Wh) **Around** **10 Recharges**	Smartphone (10Wh) **Around** **89.9 Recharges**	Switch (16Wh) **Around** **56.2 Recharges**	**+MORE**

■ Important Safety Instructions

⚠ Product Use:

- DO NOT use any inappropriate power cords.
- DO NOT place the unit close to or in a fire or expose it to heat. Keep out of direct sunlight.
- DO NOT charge, use or store the unit in a bathroom or in an area exposed to rain or moisture. Use and store the unit only in a clean and dry environment.
- Do not drop the unit into the water. If the battery in the unit comes into contact with water, it may cause chemical decomposition of the battery, which may cause the battery to catch fire or explode.
- Never use or charge swollen, leaky, or damaged batteries. If your battery is abnormal, contact us to get support.
- Never install or remove a battery from the unit when it is turned on.
- DO NOT use the batteries in strong electrostatic or electromagnetic environments. Otherwise, the battery control board may malfunction and cause a serious accident.
- Never disassemble or pierce the product in any way. Otherwise, it may leak, catch on fire, or explode.
- DO NOT use the product if it was involved in a crash or a heavy bump.
- If the product falls into water during use, take it out immediately and put it in a safe and open area. Keep a safe distance from it until it is completely dry. Never use it again and dispose it properly as described in the Battery Disposal section below. If the product catches fire, it is recommended to use fire extinguishing equipment in the following order: water or water mist, sand, fire blanket, dry powder, carbon dioxide fire extinguisher.
- Do Not allow pins, wires or other metal pieces to insert into the device case, outlets or controls. Metal pieces may short circuit the unit.
- Avoid collision. DO NOT place heavy objects on the unit.
- If there is dirt on any plug or outlet surface, use a dry cloth to clean it. Otherwise, it will cause abrasion and result in energy loss or inability to charge.
- DO NOT put the machine in a microwave oven or in a pressurized container.
- Transportation: The Portable Power Station meets all legal requirements for the transportation of dangerous goods. The capacity of the lithium battery pack exceeds 100Wh. Based on international standards, if the Portable Power Station is transported by airplane, it must be transported in accordance with IATA standard packaging. IATA instructions and labeling requirements and relevant declarations must be completed.

⚠ Product Recharging:

- When you first plug in a power source, a solar panel or a wall charger, the Portable Power Station may take one minute to detect and adjust its charge circuitry before it starts drawing power from the source.
- DO NOT charge the unit via power supply systems that operate outside of AC96-130V.
- DO NOT charge the unit via solar panel that operate voltage outside of DC12-26V.
- Always use approved attachment charging cables. We takes no responsibility for any damage caused by using other brand charging cable.
- When charging, please place the product on the ground with no flammable or combustible materials around. To prevent accidents, never leave the machine unattended during charging.
- DO NOT charge a product immediately after a long heavy load, because the product's temperature may be too high. DO NOT charge a product until it cools down to room temperature.
- Only charge, use the unit within an ambient temperature of 0 to 40°C (32~104°F). The ideal charging temperature range is 71ºF to 82ºF (22°C to 28°C).

⚠ Product Storage and Transportation:

- Keep the product out of the reach of children. If any children accidentally swallow parts, please go to a doctor immediately.
- If a low-battery warning appears, charge the battery before store.
- Store the product in dry environments. DO NOT place the product where it may contact with water.
- Make sure no small metal objects can fall on or around the product while in storage.
- Never transport a product with a battery power level higher than 30%.
- Never store the product in environments below -15°C or above 45°C.
- Battery life may be reduced if not used for a long time. It is recommended to fully charge and discharge at least once every 3 months to maintain the health of the battery pack.

■ Cleaning

- Be sure that is disconnected from all input power sources and output devices. Use a clean, dry, soft-lint-free cloth to clean.
- Remove any debris, dirt, or other blockages on both side vents. When cleaning debris from the side vents, do not allow the debris, dirt, or other blockages to enter the body.
- DO NOT use abrasive cleaners or solvents.

- DO NOT use compressed air to clean side cooling vents, as this will force foreign particles into the internal circuitry.
- To avoid the risk of electrical shock, DO NOT use metal objects to clean ports.

■ Trouble Shooting

The device does not discharge:

(1) Check whether the output buttons are activated;
(2) Check whether the total output power exceeds the rated output power;
(3) Check the battery power indicator to confirm whether the power supply is sufficient;
(4) If the device cannot be discharged after it is discharged for longtime, please wait for several hours and try again, it may enter the over-temperature protection.

The device can not be charged:

(1) Confirm that the wall plug power adapter's cord is inserted fully into the DC Input.
(2) Confirm whether the charging cable is the special charging cable provided by us. If the input does not comply with the requirements located in the general specifications section, the low watt range 0 % to 10 %may be displayed on the LCD.
(3) If the device cannot be charged immediately after it is discharged, please wait for several hours and try again, it may enter the over-temperature protection.

■ Note

A photovoltaic panel as input for charging the internal battery shall be provided with an inverter and/or a charge controller in accordance with UL 1741 or UL 62109-1; The external power supply shall be a power source in accordance with the Standard UL 60950-1 and CAN/CSA C22.2 No. 60950-1, or UL 1310 and No. 1, CAN/CSA C22.2 No. 223, or No.1, CAN/CSA C22.2 No. 223;
A vehicle adapter that complies with the enclosure and input contacts requirements in the Standard for Vehicle Battery Adapters, UL 2089, and Power Supplies, CAN/CSA C22.2 No. 107.1. The connector plug shall incorporate a fuse or other protective device having a current rating not greater than 15 A.
INSTRUCTIONS PERTAINING TO RISK OF FIRE, ELECTRIC SHOCK, OR INJURY TO PERSONS.
IMPORTANT SAFETY INSTRUCTIONS
1. WARNING – When using this product, basic precautions should always be followed, including the following:
a) Read all the instructions before using the product.
b) To reduce the risk of injury, close supervision is necessary when the product

is used near children.
c) Do not put fingers or hands into the product.
d) Use of an attachment not recommended or sold by power pack manufacturer may result in a risk of fire, electric shock, or injury to persons.
e) To reduce the risk of damage to the electric plug and cord, pull the plug rather than the cord when disconnecting the power pack.
f) Do not use a battery pack or appliance that is damaged or modified. Damaged or modified batteries may exhibit unpredictable behavior resulting in fire, explosion, or risk of injury.
g) Do not operate the power pack with a damaged cord or plug, or a damaged output cable.
h) Do not disassemble the power pack, take it to a qualified service person when service or repair is required. Incorrect reassembly may result in a risk of fire or electric shock.
i) To reduce the risk of electric shock, unplug the power pack from the outlet before attempting any instructed servicing.
j) WARNING – RISK OF EXPLOSIVE GASES.
1) To reduce the risk of battery explosion, follow these instructions and those published by the battery manufacturer and manufacturer of any equipment you intend to use in the vicinity of the battery. Review cautionary marking on these products and on engines.
k) PERSONAL PRECAUTIONS
1) Have plenty of fresh water and soap nearby in case battery acid contacts skin, clothing, or eyes.
2) Wear complete eye protection and clothing protection. Avoid touching eyes while working near the battery.
3) If battery acid contacts skin or clothing, wash immediately with soap and water. If acid enters the eye, immediately flood the eye with running cold water for at least 10 minutes and get medical attention immediately.
4) NEVER smoke or allow a spark or flame in the vicinity of the battery or engine.
5) Be extra cautious to reduce the risk of dropping a metal tool onto the battery. It might spark or short-circuit battery or other electrical parts that may cause an explosion.
l) When charging the internal battery, work in a well-ventilated area and do not restrict ventilation in any way.
m) Under abusive conditions, liquid may be ejected from the battery; avoid contact. If contact accidentally occurs, flush with water. If liquid contacts eyes, additionally seek medical help. Liquid ejected from the battery may cause irritation or burns.
n) Do not expose a power pack to fire or excessive temperature. Exposure to fire or temperature above 130°C may cause an explosion. The temperature of 130°C can be replaced by the temperature of 265°F.
o) Have servicing performed by a qualified repair person using only identical replacement parts. This will ensure that the safety of the product is maintained.
SAVE THESE INSTRUCTIONS.

■ FCC Warning

This device complies with part 15 of the FCC Rules. Operation is subject to the following two conditions:
(1) This device may not cause harmful interference, and (2) this device must accept any interference received, including interference that may cause undesired operation.
Any Changes or modifications not expressly approved by the party responsible for compliance could void the user's authority to operate the equipment.

NOTE: This equipment has been tested and found to comply with the limits for a Class B digital device, pursuant to part 15 of the FCC Rules. These limits are designed to provide reasonable protection against harmful interference in a residential installation. This equipment generates uses and can radiate radio frequency energy and, if not installed and used in accordance with the instructions, may cause harmful interference to radio communications. However, there is no guarantee that interference will not occur in a particular installation. If this equipment does cause harmful interference to radio or television reception, which can be determined by turning the equipment off and on, the user is encouraged to try to correct the interference by one or more of the following measures:

-Reorient or relocate the receiving antenna.
-Increase the separation between the equipment and receiver.
-Connect the equipment into an outlet on a circuit different from that to which the receiver is connected.
-Consult the dealer or an experienced radio/TV technician for help.

This equipment complies with FCC radiation exposure limits set forth for an uncontrolled environment.
This equipment should be installed and operated with minimum distance 20cm between the radiator & your body.

FCC ID: 2BASNRC1000MV1000

■ IC Warning

This device complies with Industry Canada's licence-exempt RSS standard(s). Operation is subject to the following two conditions:
(1) this device may not cause interference, and (2) this device must accept any interference, including interference that may cause undesired operation of the device.

Le présent appareil est conforme aux CNR d'Industrie Canada applicables aux appareils radio exempts de licence. L'exploitation est autorisée aux deux conditions suivantes:
(1) l'appareil nedoit pas produire de brouillage, et
(2) l'utilisateur de l'appareil doit accepter tout brouillage radioélectrique subi, même si le brouillage est susceptible d'en compromettre le fonctionnement This Class B digital apparatus complies with Canadian ICES-003.

Cet appareil numérique de la classe B est conforme à la norme NMB-003 du Canada.

IC RF Statement:
When using the product, maintain a distance of 20cm from the body to ensure compliance with RF exposure requirements.

■ Disposal/Recycle

Do not place equipment and its accessories in the trash. Items must be properly disposed of in accordance with local regulations.
See www.epa.gov for additional information.

■ Warranty

All products come with a full 1-year limited warranty from the date of purchase (accessories excluded). It will be out of guarantee if damaged due to incorrect use or force majeure.

Due to constant technology update, product specifications and configuration changes, please refer to the actual product.