SPECIFICATION

產 品 型 號: DESC	Φ18x41-7.4uH-0.08x72p-10mm	版本 Rev: A.0	客戶 CUST:	
			客户料号 CUST P/N:	**Z302**

一、尺寸 DIMENSION:(mm)

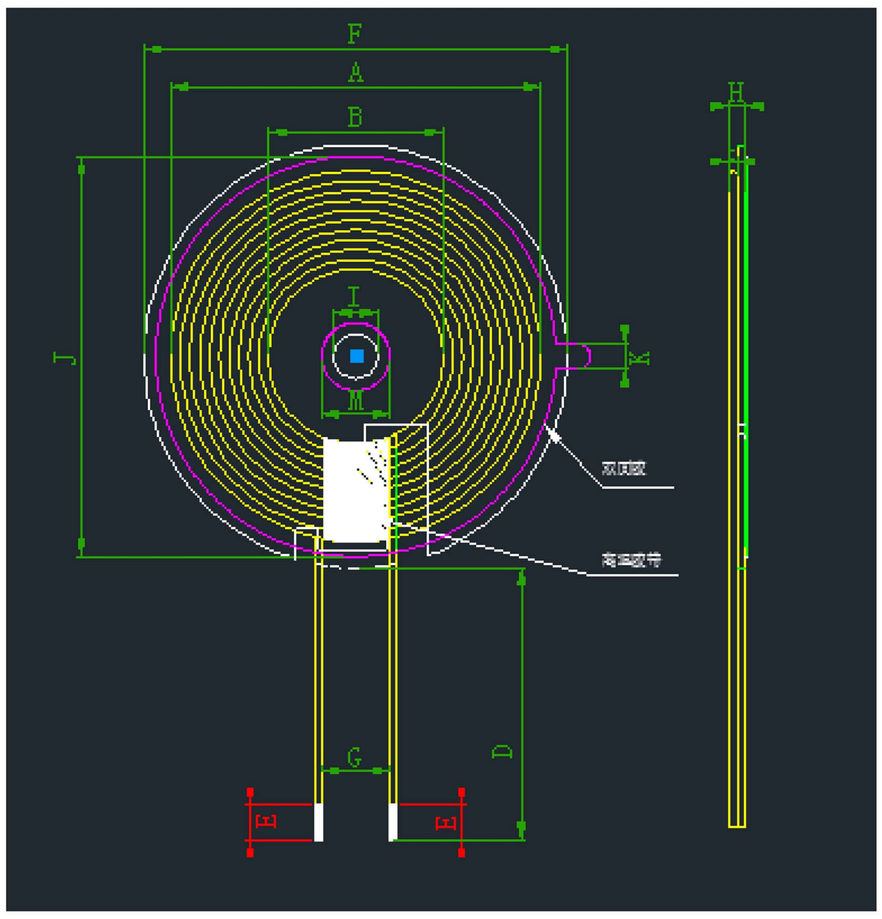

A	41.0±1.0
B	18±0.5
D	10±2
E	3±1.5
F	43.5±0.5
G	8 ±1
H	2.2 +0.2
I	5.3 ±0.3
M	7.0 ±1.0
J	42.5±0.5
K	3.0±1

注 Note:

1.交叉出线 Cross outgoing line;

2.出线位置缠 8mm(ref)宽度高温胶纸 1-2Ts Wrap 8mm (ref) wide high-temperature adhesive tape 1-2Ts around the outlet position

3.线圈贴圆形硬磁片带槽，磁片尺寸 43.5±0.5mm, 内孔 5.3mm,厚度为 0.8±0.1mm The coil is pasted with a circular hard magnetic disk with slots, with a magnetic disk size of 43.5 ± 0.5mm, an inner hole of 5.3mm, and a thickness of 0.8 ± 0.1mm

4.引线包胶处理 Lead wire wrapping treatment

二、原理图 SCHEMATIC DIAGRAM:

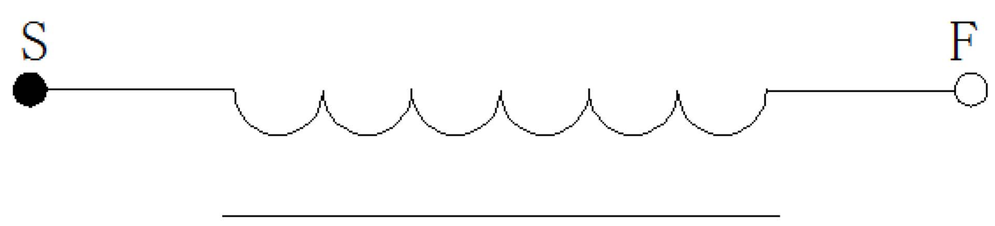

三、绕线参数 Winding Specification:

序号 NO.	端子 TERMINAL		线径 WIRE	圈数 Turns	绕线方向 Winding Direction
1	S	F	Hot air line 0.08*72P	11Ts	CCW

四、电气特性 ELECTRICAL CHARACTERISTICS:

温度 TEMPERATURE:25±10°C, 湿度 RELATIVE HUMIDITY:65±20%

序号 NO.	项目 ITEM	端子 TERMINAL	标准 SPECIFICATION	测试条件 TEST FREQUENCY	测试仪器 TEST EQUIPMENTS
1	IND.	S-F	4.5uH ±10% Individual coil	100KHz/1.0V	LCZ METER 1062B
2	IND.	S-F	7.4uH ±10% Adding magnetic disks	100KHz/1.0V	LCZ METER 1062B
3	DCR	S-F	≤60mΩ	100KHz/1.0V	LCZ METER 502B
4	Q	S-F	≧75	100KHz/1.0V	LCZ METER 502B