TEST REPORT

Applicant Name :	Xunison Inc
Address :	11720 Amber Park Dr.Suite 160 Atlanta, GA 30009 United States
Report Number :	RA221215-61882E-RF-00C
FCC ID:	2BAT3D50

Test Standard (s)

FCC PART 15.407

Sample Description

Product Type:	Xunison Hub
Model No.:	D50
Multiple Model(s) No.:	N/A
Trade Mark:	XUNISON
Date Received:	2022/12/15
Report Date:	2023/07/04

Test Result:	Pass*

* In the configuration tested, the EUT complied with the standards above.

Prepared and Checked By:

Nick Fang

EMC Engineer

Approved By:

Candy Li

EMC Engineer

Note: This report may contain data that are not covered by the A2LA accreditation and are marked with an asterisk "★ ".
Shenzhen Accurate Technology Co., Ltd. is not responsible for the authenticity of any test data provided by the applicant. Data included from the applicant that may affect test results are marked with an asterisk '*'. Customer model name, addresses, names, trademarks etc. are not considered data.
This report cannot be reproduced except in full, without prior written approval of the Company. Unless otherwise stated the results shown in this test report refer only to the sample(s) tested. This report is valid only with a valid digital signature. The digital signature may be available only under the Adobe software above version 7.0.

Shenzhen Accurate Technology Co., Ltd.
1/F., Building A, Changyuan New Material Port, Science & Industry Park, Nanshan District, Shenzhen, Guangdong, P.R. China
Tel: +86 755-26503290 Fax: +86 755-26503290 Web: www.atc-lab.com

TABLE OF CONTENTS

DOCUMENT REVISION HISTORY **3**

GENERAL INFORMATION **4**

PRODUCT DESCRIPTION FOR EQUIPMENT UNDER TEST (EUT) 4
OBJECTIVE 4
TEST METHODOLOGY 4
TEST FACILITY 5

SYSTEM TEST CONFIGURATION **6**

DESCRIPTION OF TEST CONFIGURATION 6
EUT EXERCISE SOFTWARE 6
EQUIPMENT MODIFICATIONS 6
SUPPORT EQUIPMENT LIST AND DETAILS 6
EXTERNAL I/O CABLE 6

SUMMARY OF TEST RESULTS **7**

TEST EQUIPMENT LIST **8**

APPLICABLE STANDARDS **9**

DFS REQUIREMENT 9
DFS MEASUREMENT SYSTEM 13
SYSTEM BLOCK DIAGRAM 13
CONDUCTED METHOD 14
RADIATED METHOD 15
TEST PROCEDURE 15

TEST RESULTS **16**

DESCRIPTION OF EUT 16
RADAR WAVEFORM CALIBRATION 16
TEST DATA 16

DETECTION BANDWIDTH **17**

TEST PROCEDURE 17
TEST DATA 17

STATISTICAL PERFORMANCE CHECK **18**

TEST PROCEDURE 18
TEST DATA 18

APPENDIX **19**

APPENDIX A: DFS DETECTION THRESHOLDS 19
APPENDIX B: U-NII DETECTION BANDWIDTH 24
APPENDIX C: STATISTICAL PERFORMANCE CHECK 27

DOCUMENT REVISION HISTORY

Revision Number	Report Number	Description of Revision	Date of Revision
0	RA221215-61882E-RF-00C	Original Report	2023/06/13
1	RA221215-61882E-RF-00C	Add radar type 5 waveforms	2023/07/04

GENERAL INFORMATION

Product Description for Equipment under Test (EUT)

Frequency Range	5G Wi-Fi: 5250-5350MHz; 5470-5725MHz
Mode	802.11a/n20/n40/ac20/ac40/ac80/ac160/ax20/ax40/ax80/ax160
Maximum Conducted Average Output Power	5250-5350MHz: 20.34dBm 5470-5725MHz: 20.47dBm
Maximum EIRP	5250-5350MHz: 25.34dBm 5470-5725MHz: 25.47dBm
Modulation Technique	OFDM, OFDMA
Antenna Specification*	ANT 0: 5.0dBi, ANT 1: 5.0dBi, ANT 2: 5.0dBi, ANT 3:5.0dBi (It is provided by the applicant)
Voltage Range	DC12V from adapter
Sample serial number	1ZF6 (Assigned by ATC)
Sample/EUT Status	Good condition
Adapter 1 Information	Model: AS2406A-1202000DM Input: AC 100-240V, 50/60Hz, 0.8A MAX Output: DC 12.0V, 2.0A, 24.0W
Adapter 2 Information	Model: AS2406A-1202000US Input: AC 100-240V, 50/60Hz, 0.8A MAX Output: DC 12.0V, 2000mA
Adapter 3 Information	Model: RD1202000-C55-154MG Input: AC 100-240V, 50/60Hz, 1.0A MAX Output: DC 12.0V, 2.0A

Objective

This test report is in accordance with Part 2-Subpart J, Part 15-Subparts E of the Federal Communications Commission's rules.

The objective is to determine compliance with FCC Part 15, Subpart E, section 15.407 Dynamic Frequency Selection (DFS) for devices operating in the bands 5250-5350 MHz, 5470-5725 MHz.

Test Methodology

FCC KDB 905462 D02 UNII DFS Compliance Procedures New Rules v02.

Each test item follows test standards and with no deviation.

Test Facility

The test site used by Shenzhen Accurate Technology Co., Ltd. to collect test data is located on the Floor 1, KuMaKe Building, Dongzhou Community, Guangming Street, Guangming District, Shenzhen, Guangdong, China.

The test site has been approved by the FCC under the KDB 974614 D01 and is listed in the FCC Public Access Link (PAL) database, FCC Registration No.: 708358, the FCC Designation No.: CN1189. Accredited by American Association for Laboratory Accreditation (A2LA) The Certificate Number is 429 7.01.

The lab has been recognized by Innovation, Science and Economic Development Canada to test to Canadian radio equipment requirements, the CAB identifier: CN0016. The Registration Number is 30241.

SYSTEM TEST CONFIGURATION

Description of Test Configuration

The EUT was configured for testing in an engineering mode which was provided by the manufacturer.

EUT Exercise Software

"SecureCRT" software was used.

Equipment Modifications

N/A

Support Equipment List and Details

Manufacturer	Description	Model	Serial Number
ASUS	Notebook	FX504G	J6NRCX0140447232

External I/O Cable

Cable Description	Length (m)	From/Port	To
Un-shielded detachable RJ45 cable	8.0	EUT	NoteBook
Unshielded Un-detachable DC cable	1.8	Adapter	EUT

SUMMARY OF TEST RESULTS

The following result table represents the list of measurements required under the CFR §47 Part 15.407(h), and KDB: 905462 D02 UNII DFS Compliance Procedures New Rules v02

Items	Description of Test	Result
Detection Bandwidth	UNII Detection Bandwidth	Compliant**
Performance Requirements Check	Initial Channel Availability Check Time (CAC)	Compliant*
	Radar Burst at the Beginning of the CAC	Compliant*
	Radar Burst at the End of the CAC	Compliant*
In-Service Monitoring	Channel Move Time	Compliant*
	Channel Closing Transmission Time	Compliant*
	Non-Occupancy Period	Compliant*
Radar Detection	Statistical Performance Check	Compliant**

Compliant*: The EUT is identical with the certified device which the model is D50 Home (FCC ID: 2BAT3D50H), except the D50 Home has a Zigbee module, all other are same. So the data refer to the report RA221215-61881E-RF-00D

Compliant**: The spot chek test items.

Note: This device does not support “802.11ax Channel Puncturing” function.

TEST EQUIPMENT LIST

Manufacturer	Description	Model	Serial Number	Calibration Date	Calibration Due Date
Rohde&Schwarz	Spectrum Analyzer	FSV-40	101590	2022/11/25	2023/11/24
Rohde & Schwarz	Open Switch and Control Unit	OSP120 + OSP-B157	101244 + 100866	2022/11/25	2023/11/24
AGILENT	Vector Signal Generator	N5182B	MY53052129	2022/11/25	2023/11/24

*** Statement of Traceability:** Shenzhen Accurate Technology Co., Ltd. attests that all calibrations have been performed in accordance to requirements that traceable to National Primary Standards and International System of Units (SI).

APPLICABLE STANDARDS

DFS Requirement

CFR §47 Part 15.407(h)

FCC KDB 905462 D02 UNII DFS Compliance Procedures New Rules v02

Table 1: Applicability of DFS Requirements Prior to Use of a Channel

Requirement	Operational Mode		
	Master	Client Without Radar Detection	Client With Radar Detection
Non-Occupancy Period	Yes	Not required	Yes
DFS Detection Threshold	Yes	Not required	Yes
Channel Availability Check Time	Yes	Not required	Not required
U-NII Detection Bandwidth	Yes	Not required	Yes

Table 2: Applicability of DFS requirements during normal operation

Requirement	Operational Mode	
	Master Device or Client with Radar Detection	Client Without Radar Detection
DFS Detection Threshold	Yes	Not required
Channel Closing Transmission Time	Yes	Yes
Channel Move Time	Yes	Yes
U-NII Detection Bandwidth	Yes	Not required

Additional requirements for devices with multiple bandwidth modes	Master Device or Client with Radar Detection	Client Without Radar Detection
U-NII Detection Bandwidth and Statistical Performance Check	All BW modes must be tested	Not required
Channel Move Time and Channel Closing Transmission Time	Test using widest BW mode available	Test using the widest BW mode available for the link
All other tests	Any single BW mode	Not required
Note: Frequencies selected for statistical performance check (Section 7.8.4) should include several frequencies within the radar detection bandwidth and frequencies near the edge of the radar detection bandwidth. For 802.11 devices it is suggested to select frequencies in each of the bonded 20 MHz channels and the channel center frequency.		

Table 3: DFS Detection Thresholds for Master Devices and Client Devices With Radar Detection

Maximum Transmit Power	Value (See Notes 1, 2, and 3)
EIRP ≥ 200 milliwatt	-64 dBm
EIRP < 200 milliwatt and power spectral density < 10 dBm/MHz	-62 dBm
EIRP < 200 milliwatt that do not meet the power spectral density requirement	-64 dBm

Note 1: This is the level at the input of the receiver assuming a 0 dBi receive antenna.
Note 2: Throughout these test procedures an additional 1 dB has been added to the amplitude of the test transmission waveforms to account for variations in measurement equipment. This will ensure that the test signal is at or above the detection threshold level to trigger a DFS response.
Note3: EIRP is based on the highest antenna gain. For MIMO devices refer to KDB Publication 662911 D01.

Table 4: DFS Response Requirement Values

Parameter	Value
Non-occupancy period	Minimum 30 minutes
Channel Availability Check Time	60 seconds
Channel Move Time	10 seconds See Note 1.
Channel Closing Transmission Time	200 milliseconds + an aggregate of 60 milliseconds over remaining 10 second period. See Notes 1 and 2.
U-NII Detection Bandwidth	Minimum 100% of the U-NII 99% transmission power bandwidth. See Note 3.

Note 1: *Channel Move Time* and the *Channel Closing Transmission Time* should be performed with Radar Type 0. The measurement timing begins at the end of the Radar Type 0 burst.
Note 2: The *Channel Closing Transmission Time* is comprised of 200 milliseconds starting at the beginning of the *Channel Move Time* plus any additional intermittent control signals required to facilitate a *Channel* move (an aggregate of 60 milliseconds) during the remainder of the 10 second period. The aggregate duration of control signals will not count quiet periods in between transmissions.
Note 3: During the *U-NII Detection Bandwidth* detection test, radar type 0 should be used. For each frequency step the minimum percentage of detection is 90 percent. Measurements are performed with no data traffic.

Table 5 – Short Pulse Radar Test Waveforms

Radar Type	Pulse Width (µsec)	PRI (µsec)	Number of Pulses	Minimum Percentage of Successful Detection	Minimum Number of Trials
0	1	1428	18	See Note 1	See Note 1
1	1	Test A: 15 unique PRI values randomly selected from the list of 23 PRI values in Table 5a	$\text{Roundup}\left\{\left(\frac{1}{360}\right)\cdot\left(\frac{19\cdot 10^6}{\text{PRI}_{\mu\text{sec}}}\right)\right\}$	60%	30
		Test B: 15 unique PRI values randomly selected within the range of 518-3066 µsec, with a minimum increment of 1 µsec, excluding PRI values selected in Test A			
2	1-5	150-230	23-29	60%	30
3	6-10	200-500	16-18	60%	30
4	11-20	200-500	12-16	60%	30
Aggregate (Radar Types 1-4)				80%	120
Note 1: Short Pulse Radar Type 0 should be used for the detection bandwidth test, channel move time, and channel closing time tests.					

A minimum of 30 unique waveforms are required for each of the Short Pulse Radar Types 2 through 4. If more than 30 waveforms are used for Short Pulse Radar Types 2 through 4, then each additional waveform must also be unique and not repeated from the previous waveforms. If more than 30 waveforms are used for Short Pulse Radar Type 1, then each additional waveform is generated with Test B and must also be unique and not repeated from the previous waveforms in Tests A or B.

For example if in Short Pulse Radar Type 1 Test B a PRI of 3066 usec is selected, the number of pulses would be $\text{Roundup}\left\{\left(\frac{1}{360}\right)\cdot\left(\frac{19\cdot 10^6}{3066}\right)\right\} = \text{Roundup}\{17.2\} = 18.$

Table 5a - Pulse Repetition Intervals Values for Test A

Pulse Repetition Frequency Number	Pulse Repetition Frequency (Pulses Per Second)	Pulse Repetition Interval (Microseconds)
1	1930.5	518
2	1858.7	538
3	1792.1	558
4	1730.1	578
5	1672.2	598
6	1618.1	618
7	1567.4	638
8	1519.8	658
9	1474.9	678
10	1432.7	698
11	1392.8	718
12	1355	738
13	1319.3	758
14	1285.3	778
15	1253.1	798
16	1222.5	818
17	1193.3	838
18	1165.6	858
19	1139	878
20	1113.6	898
21	1089.3	918
22	1066.1	938
23	326.2	3066

The aggregate is the average of the percentage of successful detections of Short Pulse Radar Types 1-4. For example, the following table indicates how to compute the aggregate of percentage of successful detections.

Radar Type	Number of Trials	Number of Successful Detections	Minimum Percentage of Successful Detection
1	35	29	82.9%
2	30	18	60%
3	30	27	90%
4	50	44	88%
Aggregate (82.9% + 60% + 90% + 88%)/4 = 80.2%			

Table 6 – Long Pulse Radar Test Waveform

Radar Type	Pulse Width (µsec)	Chirp Width (MHz)	PRI (µsec)	Number of Pulses per *Burst*	Number of *Bursts*	Minimum Percentage of Successful Detection	Minimum Number of Trials
5	50-100	5-20	1000-2000	1-3	8-20	80%	30

Table 7 – Frequency Hopping Radar Test Waveform

Radar Type	Pulse Width (µsec)	PRI (µsec)	Pulses per Hop	Hopping Rate (kHz)	Hopping Sequence Length (msec)	Minimum Percentage of Successful Detection	Minimum Number of Trials
6	1	333	9	0.333	300	70%	30

DFS Measurement System

DFS measurement system consists of two subsystems: (1) The radar signal generating subsystem and (2) the traffic monitoring subsystem.

System Block Diagram

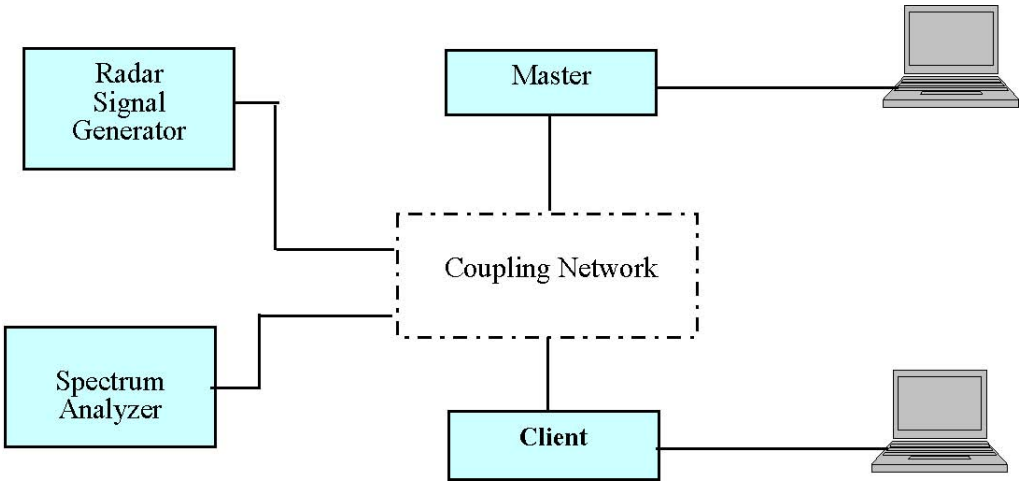

Conducted Method

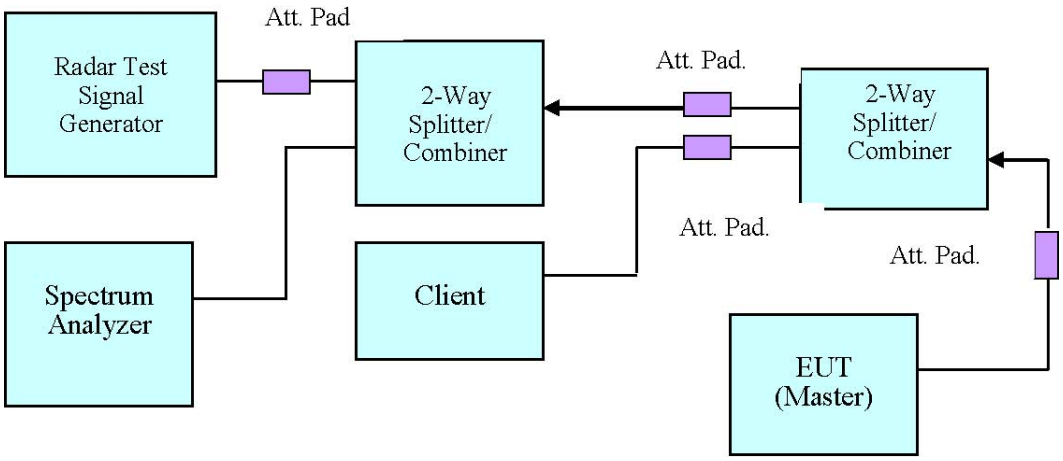

Setup for Master with injection at the Master

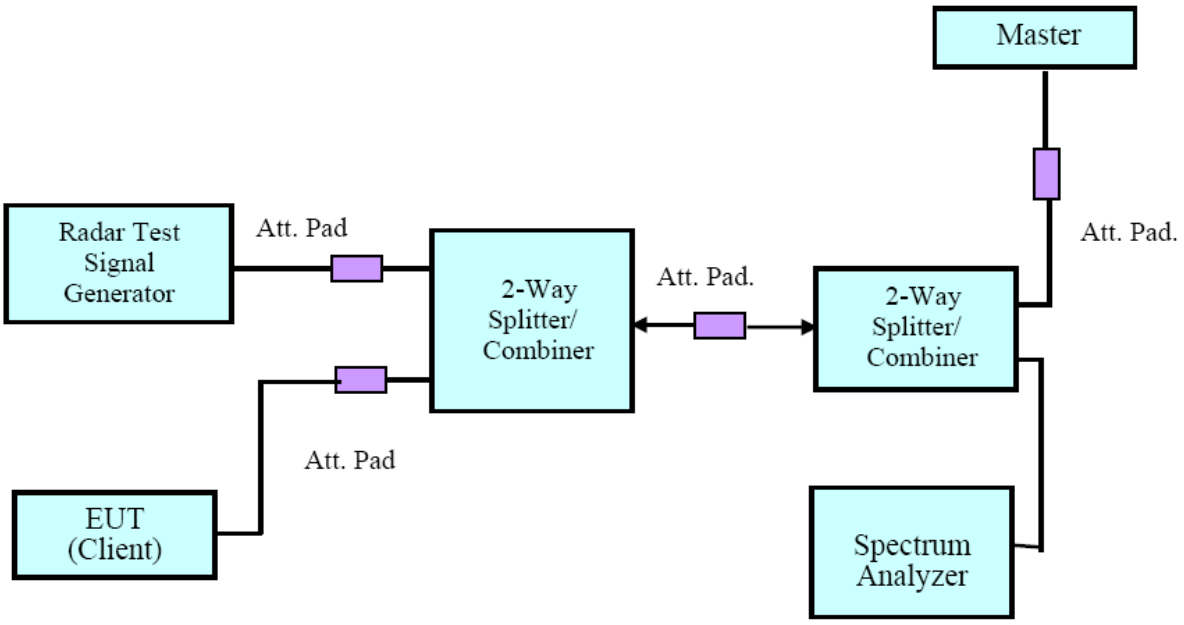

Setup for Client with injection at the Master

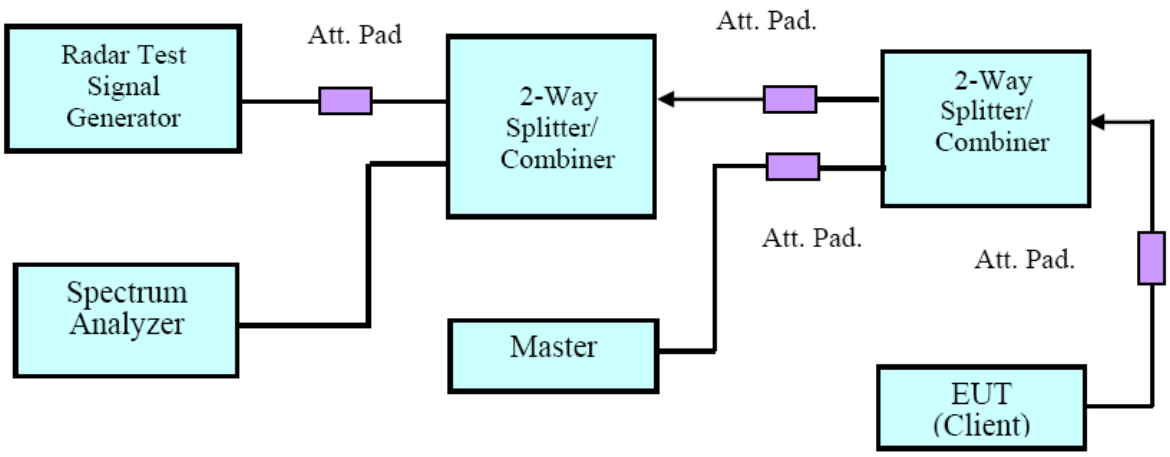

Setup for Client with injection at the Client

Radiated Method

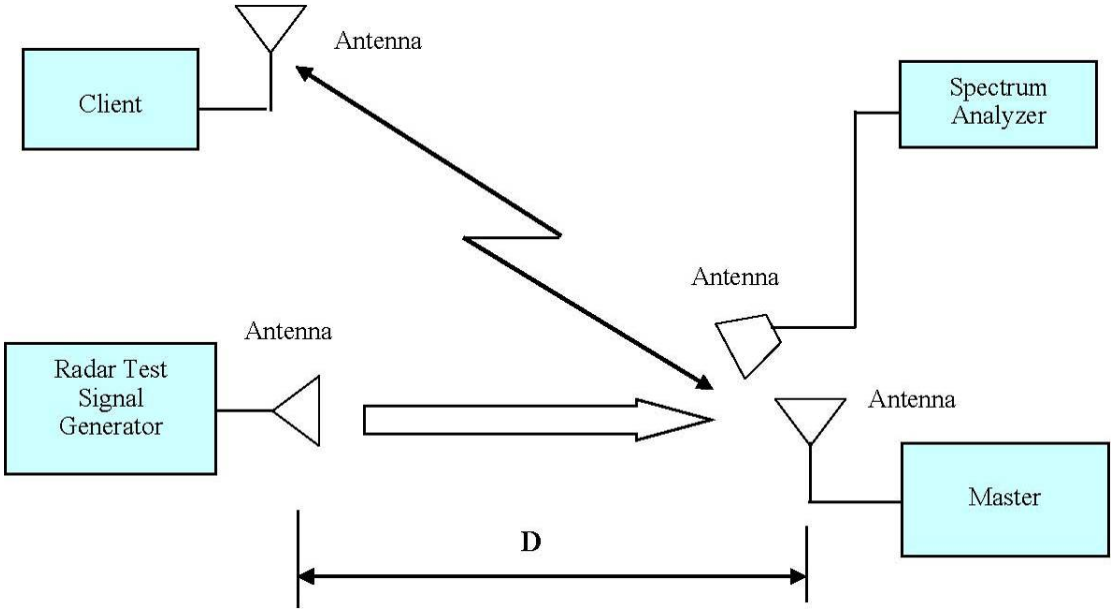

Test Procedure

A spectrum analyzer is used as a monitor verifies that the EUT status including Channel Closing Transmission Time and Channel Move Time, and does not transmit on a Channel during the Non-Occupancy Period after the diction and Channel move. It is also used to monitor EUT transmissions during the Channel Availability Check Time.

TEST RESULTS

Description of EUT

The calibrated radiated DFS detection threshold level is set to -64 dBm is more stringent.

Radar Waveform Calibration

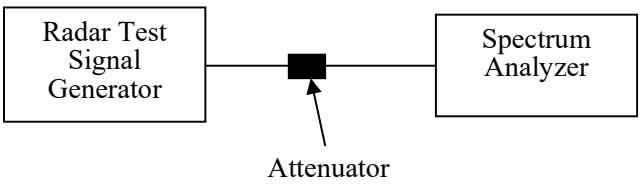

Test Data

Environmental Conditions

Temperature:	25 ℃
Relative Humidity:	45 %
ATM Pressure:	101.0 kPa

The testing was performed by Nick Fang on 2023-06-12.

EUT operation mode: Transmitting

Test Result: Pass

Note: measurement was made on antenna port 1

Please refer to the Appendix.

DETECTION BANDWIDTH

Test Procedure

Performed with Type 0 radar waveforms

Starting at the center frequency of the UUT operating Channel, increase the radar frequency in 5 MHz steps, repeating the above test sequence, until the detection rate falls below the *U-NII Detection Bandwidth* criterion specified in Table 4. Repeat this measurement in 1MHz steps at frequencies 5 MHz below where the detection rate begins to fall. Record the highest frequency (denote as F_H) at which detection is greater than or equal to the *U-NII Detection Bandwidth* criterion. Recording the detection rate at frequencies above F_H is not required to demonstrate compliance.

Starting at the center frequency of the UUT operating Channel, decrease the radar frequency in 5 MHz steps, repeating the above test sequence, until the detection rate falls below the *U-NII Detection Bandwidth* criterion specified in Table 4. Repeat this measurement in 1MHz steps at frequencies 5 MHz above where the detection rate begins to fall. Record the lowest frequency (denote as F_L) at which detection is greater than or equal to the *U-NII Detection Bandwidth* criterion. Recording the detection rate at frequencies below F_L is not required to demonstrate compliance

The *U-NII Detection Bandwidth* is calculated as follows: *U-NII Detection Bandwidth* = $F_H - F_L$

The *U-NII Detection Bandwidth* must meet the *U-NII Detection Bandwidth* criterion specified in Table 4. Otherwise, the UUT does not comply with DFS requirements. This is essential to ensure that the UUT is capable of detecting *Radar Waveforms* across the same frequency spectrum that contains the significant energy from the system. In the case that the *U-NII Detection Bandwidth* is greater than or equal to the 99 percent power bandwidth for the measured F_H and F_L, the test can be truncated and the *U-NII Detection Bandwidth* can be reported as the measured F_H and F_L.

Test Data

Environmental Conditions

Temperature:	25 ℃
Relative Humidity:	45 %
ATM Pressure:	101.0 kPa

The testing was performed by Nick Fang on 2023-06-10.

EUT operation mode: Transmitting

Test Result: Pass

Note: measurement was made on antenna port 1

Please refer to the Appendix.

STATISTICAL PERFORMANCE CHECK

Test Procedure

The steps below define the procedure to determine the minimum percentage of successful detection requirements found in **Tables 5-7** when a radar burst with a level equal to the *DFS Detection Threshold* + 1dB is generated on the *Operating Channel* of the U-NII device *(In- Service Monitoring).*
a) One frequency will be chosen from the *Operating Channels* of the UUT within the 5250-5350 MHz or 5470-5725 MHz bands.

b) In case the UUT is a U-NII device operating as a *Client Device* (with or without Radar Detection), a U-NII device operating as a *Master Device* will be used to allow the UUT (Client device) to *Associate* with the *Master Device*. In case the UUT is a *Master Device*, a U-NII device operating as a *Client Device* will be used and it is assumed that the Client will *Associate* with the UUT (Master). In both cases for conducted tests, the *Radar Waveform* generator will be connected to the *Master Device*. For radiated tests, the emissions of the *Radar Waveform* generator will be directed towards the *Master Device*. If the *Master Device* has antenna gain, the main beam of the antenna will be directed toward the radar emitter. Vertical polarization is used for testing.

c) Stream the channel loading test file from the *Master Device* to the Client Device on the test *Channel* for the entire period of the test.

d) At time T_0 the *Radar Waveform* generator sends the individual waveform for each of the Radar Types 1-6 in **Tables 5-7**, at levels defined in **Table 3**, on the *Operating Channel*. An additional 1 dB is added to the radar test signal to ensure it is at or above the *DFS Detection Threshold*, accounting for equipment variations/errors.

e) Observe the transmissions of the UUT at the end of the Burst on the *Operating Channel* for duration greater than 10 seconds for Radar Type 0 to ensure detection occurs.

f) Observe the transmissions of the UUT at the end of the Burst on the *Operating Channel* for duration greater than 22 seconds for Long Pulse Radar Type 5 to ensure detection occurs.

g) In case the UUT is a U-NII device operating as a *Client Device* with *In-Service Monitoring*, perform steps a) to f).

Test Data

Environmental Conditions

Temperature:	25 ℃
Relative Humidity:	45 %
ATM Pressure:	101.0 kPa

The testing was performed by Nick Fang on 2023-06-12.

EUT operation mode: Transmitting

Test Result: Pass

Note: measurement was made on antenna port 1

Please refer to the Appendix.

APPENDIX

Appendix A: DFS Detection Thresholds

Test Result

Test Mode	Frequency [MHz]	Radar Type	Result [dbm]	Limit[dbm]	Verdict
160M	5570	Type0	-64.43	-64.00	PASS
		Type1	-64.11	-64.00	PASS
		Type2	-64.38	-64.00	PASS
		Type3	-64.22	-64.00	PASS
		Type4	-64.25	-64.00	PASS
		Type5	-64.22	-64.00	PASS
		Type6	-64.10	-64.00	PASS

Test Graphs

160M_5570_Type0

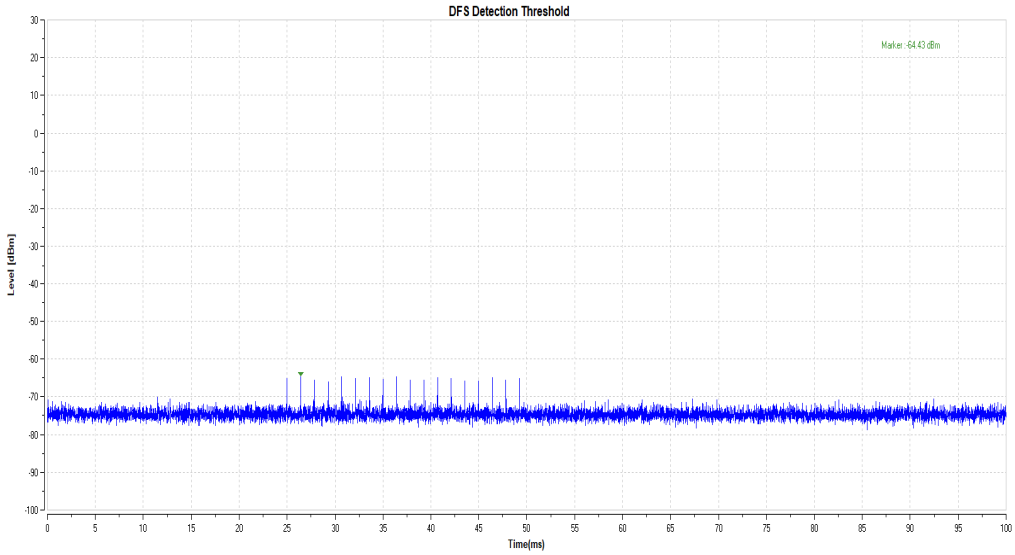

160M_5570_Type1

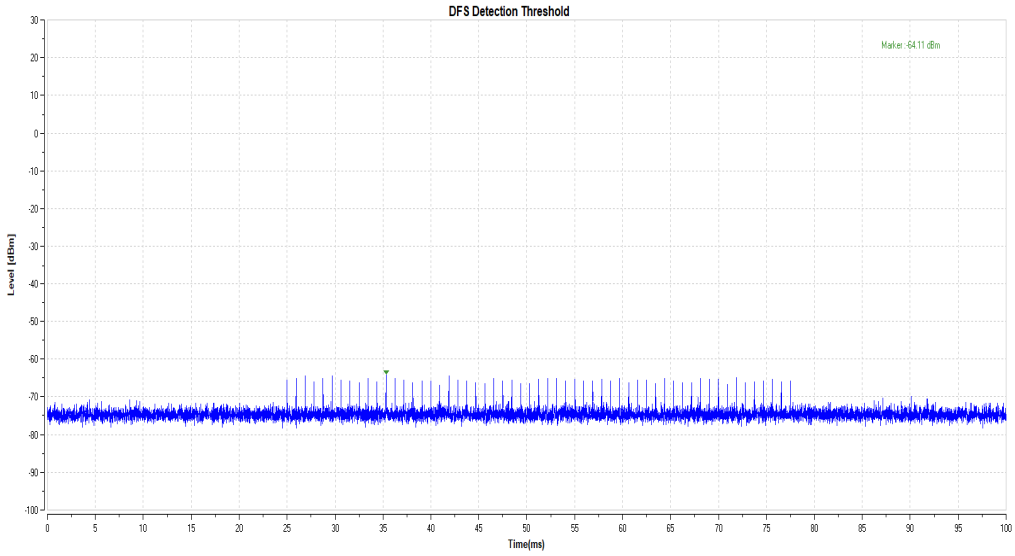

160M_5570_Type2

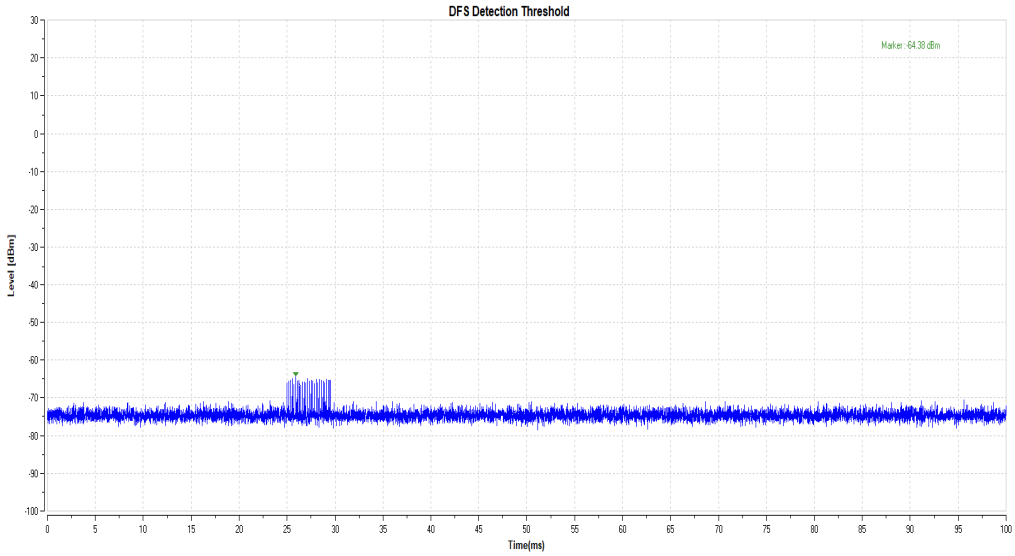

160M_5570_Type3

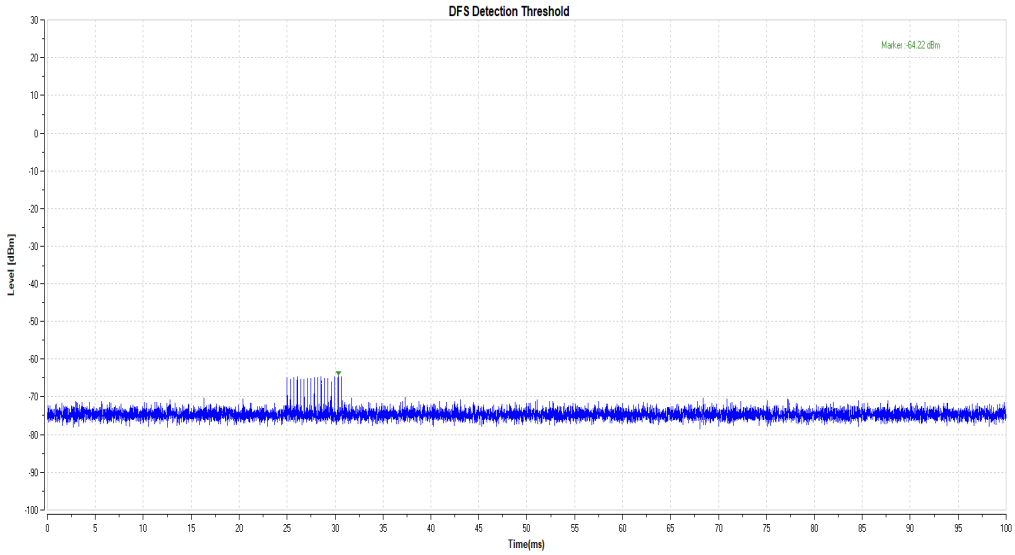

160M_5570_Type4

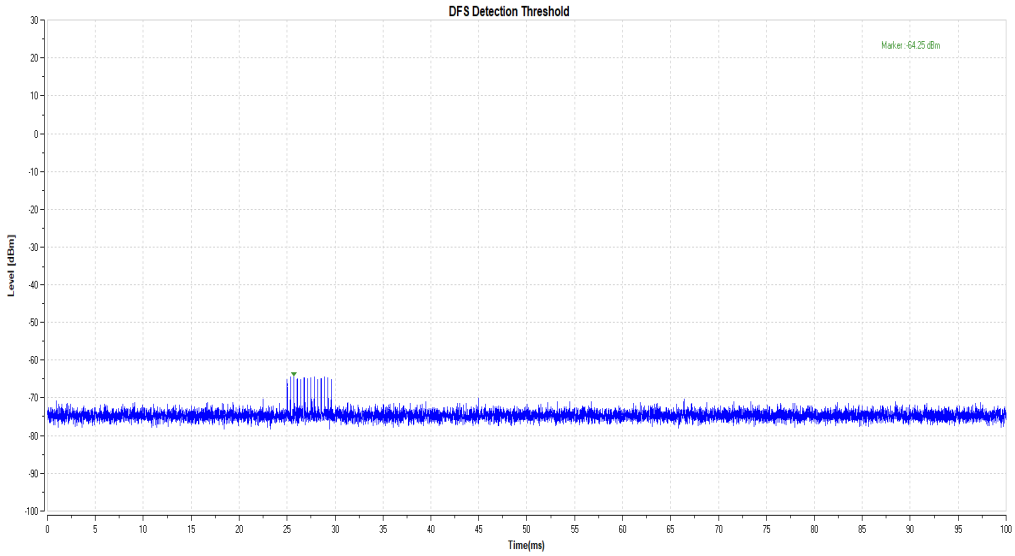

160M_5570_Type5

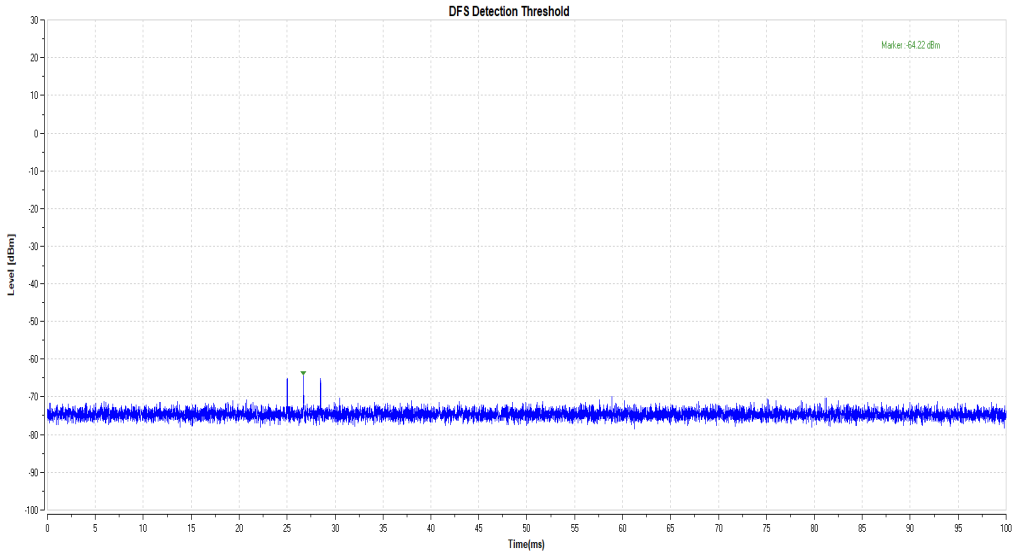

160M_5570_Type6

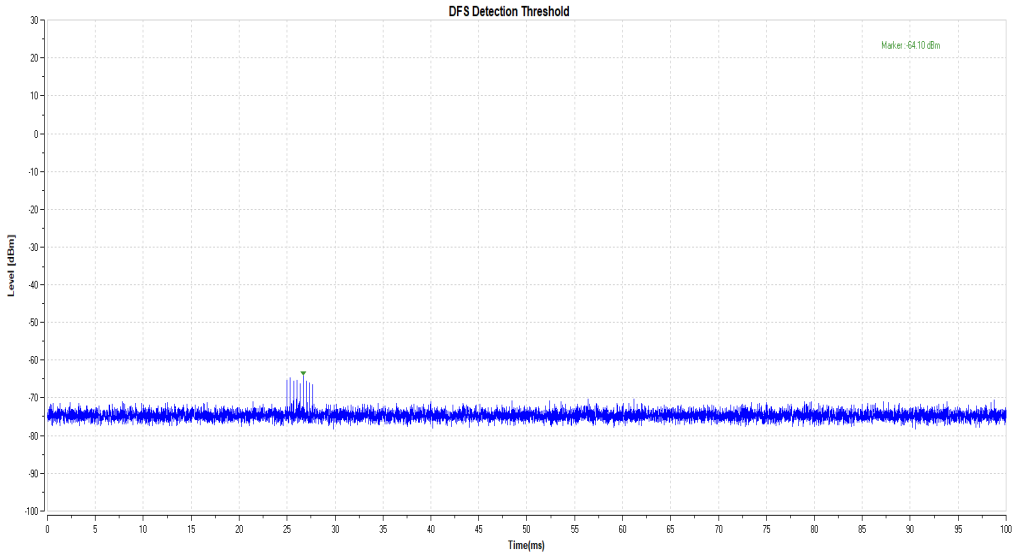

Appendix B: U-NII Detection Bandwidth
Test Result

Test Mode	Frequency[MHz]	FL[MHz]	FH[MHz]	Detection Bandwidth [MHz]	OCB [MHz]	Ratio [%]	Limit [%]	Verdict
11AX160MIMO	5570	5490	5650	160	156.324	100.00	≥100	PASS

Test Mode	Frequency[MHz]	Radar Freq.	Trial 1	Trial 2	Trial 3	Trial 4	Trial 5	Trial 6	Trial 7	Trial 8	Trial 9	Trial 10	Ratio (%)
11AX160MIMO	5570	5490	1	1	1	1	1	1	1	1	1	1	100
		5491	1	1	1	1	1	1	1	1	1	1	100
		5492	1	1	1	1	1	1	1	1	1	1	100
		5493	1	1	1	1	1	1	1	1	1	1	100
		5494	1	1	1	1	1	1	1	1	1	1	100
		5495	1	1	1	1	1	1	1	1	1	1	100
		5496	1	1	1	1	1	1	1	1	1	1	100
		5497	1	1	1	1	1	1	1	1	1	1	100
		5498	1	1	1	1	1	1	1	1	1	1	100
		5499	1	1	1	1	1	1	1	1	1	1	100
		5500	1	1	1	1	1	1	1	1	1	1	100
		5501	1	1	1	1	1	1	1	1	1	1	100
		5502	1	1	1	1	1	1	1	1	1	1	100
		5503	1	1	1	1	1	1	1	1	1	1	100
		5504	1	1	1	1	1	1	1	1	1	1	100
		5505	1	1	1	1	1	1	1	1	1	1	100
		5506	1	1	1	1	1	1	1	1	1	1	100
		5507	1	1	1	1	1	1	1	1	1	1	100
		5508	1	1	1	1	1	1	1	1	1	1	100
		5509	1	1	1	1	1	1	1	1	1	1	100
		5510	1	1	1	1	1	1	1	1	1	1	100
		5511	1	1	1	1	1	1	1	1	1	1	100
		5512	1	1	1	1	1	1	1	1	1	1	100
		5513	1	1	1	1	1	1	1	1	1	1	100
		5514	1	1	1	1	1	1	1	1	1	1	100
		5515	1	1	1	1	1	1	1	1	1	1	100

Test Mode	Frequency[MHz]	Radar Freq.	Trial 1	Trial 2	Trial 3	Trial 4	Trial 5	Trial 6	Trial 7	Trial 8	Trial 9	Trial 10	Ratio (%)
11AX160MIMO	5570	5516	1	1	1	1	1	1	1	1	1	1	100
		5517	1	1	1	1	1	1	1	1	1	1	100
		5518	1	1	1	1	1	1	1	1	1	1	100
		5519	1	1	1	1	1	1	1	1	1	1	100
		5520	1	1	1	1	1	1	1	1	1	1	100
		5521	1	1	1	1	1	1	1	1	1	1	100
		5522	1	1	1	1	1	1	1	1	1	1	100
		5523	1	1	1	1	1	1	1	1	1	1	100
		5524	1	1	1	1	1	1	1	1	1	1	100
		5525	1	1	1	1	1	1	1	1	1	1	100
		5530	1	1	1	1	1	1	1	1	1	1	100
		5535	1	1	1	1	1	1	1	1	1	1	100
		5540	1	1	1	1	1	1	1	1	1	1	100
		5545	1	1	1	1	1	1	1	1	1	1	100
		5550	1	1	1	1	1	1	1	1	1	1	100
		5555	1	1	1	1	1	1	1	1	1	1	100
		5560	1	1	1	1	1	1	1	1	1	1	100
		5565	1	1	1	1	1	1	1	1	1	1	100
		5570	1	1	1	1	1	1	1	1	1	1	100
		5575	1	1	1	1	1	1	1	1	1	1	100
		5580	1	1	1	1	1	1	1	1	1	1	100
		5585	1	1	1	1	1	1	1	1	1	1	100
		5590	1	1	1	1	1	1	1	1	1	1	100
		5595	1	1	1	1	1	1	1	1	1	1	100
		5600	1	1	1	1	1	1	1	1	1	1	100
		5605	1	1	1	1	1	1	1	1	1	1	100
		5610	1	1	1	1	1	1	1	1	1	1	100
		5615	1	1	1	1	1	1	1	1	1	1	100
		5616	1	1	1	1	1	1	1	1	1	1	100
		5617	1	1	1	1	1	1	1	1	1	1	100
		5618	1	1	1	1	1	1	1	1	1	1	100
		5619	1	1	1	1	1	1	1	1	1	1	100
		5620	1	1	1	1	1	1	1	1	1	1	100
		5621	1	1	1	1	1	1	1	1	1	1	100
		5622	1	1	1	1	1	1	1	1	1	1	100
		5623	1	1	1	1	1	1	1	1	1	1	100
		5624	1	1	1	1	1	1	1	1	1	1	100
		5625	1	1	1	1	1	1	1	1	1	1	100

Test Mode	Frequency[MHz]	Radar Freq.	Trial 1	Trial 2	Trial 3	Trial 4	Trial 5	Trial 6	Trial 7	Trial 8	Trial 9	Trial 10	Ratio (%)
11AX160MIMO	5570	5626	1	1	1	1	1	1	1	1	1	1	100
		5627	1	1	1	1	1	1	1	1	1	1	100
		5628	1	1	1	1	1	1	1	1	1	1	100
		5629	1	1	1	1	1	1	1	1	1	1	100
		5630	1	1	1	1	1	1	1	1	1	1	100
		5631	1	1	1	1	1	1	1	1	1	1	100
		5632	1	1	1	1	1	1	1	1	1	1	100
		5633	1	1	1	1	1	1	1	1	1	1	100
		5634	1	1	1	1	1	1	1	1	1	1	100
		5635	1	1	1	1	1	1	1	1	1	1	100
		5636	1	1	1	1	1	1	1	1	1	1	100
		5637	1	1	1	1	1	1	1	1	1	1	100
		5638	1	1	1	1	1	1	1	1	1	1	100
		5639	1	1	1	1	1	1	1	1	1	1	100
		5640	1	1	1	1	1	1	1	1	1	1	100
		5641	1	1	1	1	1	1	1	1	1	1	100
		5642	1	1	1	1	1	1	1	1	1	1	100
		5643	1	1	1	1	1	1	1	1	1	1	100
		5644	1	1	1	1	1	1	1	1	1	1	100
		5645	1	1	1	1	1	1	1	1	1	1	100
		5646	1	1	1	1	1	1	1	1	1	1	100
		5657	1	1	1	1	1	1	1	1	1	1	100
		5648	1	1	1	1	1	1	1	1	1	1	100
		5649	1	1	1	1	1	1	1	1	1	1	100
		5650	1	1	1	1	1	1	1	1	1	1	100
		5651	0	0	0	0	0	0	0	0	0	0	0

Appendix C: Statistical Performance check

Test Result

Test Mode	Channel	Radar Type	Pass Times	Fail Times	Probability (%)	Limit (%)	Verdict
11AX160MIMO	5570	Type1	28	2	93.33	60	PASS
		Type2	30	0	100.00	60	PASS
		Type3	30	0	100.00	60	PASS
		Type4	28	2	93.33	60	PASS
		Aggregate (Types 1-4)	116	4	96.67	80	PASS
		Type5	30	0	100.00	80	PASS
		Type6	30	0	100.00	70	PASS

Test Mode	Channel	Radar Type	Trial ID	Pulse width(μs)	PRI(μs)	Pulses per Burst	Detection (1: Yes; 0: No)
11AX160MIMO	5570	Type1	0	1.0	938.0	57	0
		Type1	1	1.0	698.0	76	1
		Type1	2	1.0	618.0	86	1
		Type1	3	1.0	538.0	99	1
		Type1	4	1.0	878.0	61	1
		Type1	5	1.0	3066.0	18	1
		Type1	6	1.0	638.0	83	1
		Type1	7	1.0	918.0	58	1
		Type1	8	1.0	838.0	63	1
		Type1	9	1.0	858.0	62	1
		Type1	10	1.0	798.0	67	1
		Type1	11	1.0	718.0	74	1
		Type1	12	1.0	578.0	92	1
		Type1	13	1.0	598.0	89	1
		Type1	14	1.0	558.0	95	1
		Type1	15	1.0	2536.0	21	1
		Type1	16	1.0	966.0	55	1
		Type1	17	1.0	827.0	64	1
		Type1	18	1.0	2501.0	22	1
		Type1	19	1.0	2595.0	21	1
		Type1	20	1.0	1114.0	48	1
		Type1	21	1.0	1302.0	41	1
		Type1	22	1.0	3045.0	18	1
		Type1	23	1.0	1624.0	33	1
		Type1	24	1.0	2878.0	19	1
		Type1	25	1.0	1027.0	52	1
		Type1	26	1.0	2485.0	22	1
		Type1	27	1.0	1600.0	33	1
		Type1	28	1.0	1172.0	46	1
		Type1	29	1.0	1177.0	45	0
		Type2	0	3.2	179.0	26	1
		Type2	1	1.1	207.0	23	1
		Type2	2	2.1	230.0	24	1
		Type2	3	4.8	200.0	29	1
		Type2	4	3.9	214.0	28	1
		Type2	5	2.9	222.0	26	1
		Type2	6	3.2	204.0	26	1
		Type2	7	2.5	192.0	25	1
		Type2	8	3.1	164.0	26	1
		Type2	9	1.2	156.0	23	1
		Type2	10	3.9	210.0	27	1
		Type2	11	4.6	201.0	29	1
		Type2	12	3.2	162.0	26	1
		Type2	13	2.2	197.0	25	1
		Type2	14	4.5	163.0	29	1
		Type2	15	3.0	203.0	26	1
		Type2	16	5.0	168.0	29	1
		Type2	17	2.4	217.0	25	1
		Type2	18	2.9	191.0	26	1
		Type2	19	2.3	166.0	25	1
		Type2	20	3.7	150.0	27	1
		Type2	21	2.2	176.0	25	1
		Type2	22	4.9	195.0	29	1
		Type2	23	2.9	202.0	26	1
		Type2	24	2.5	178.0	25	1
		Type2	25	1.1	206.0	23	1
		Type2	26	3.8	155.0	27	1
		Type2	27	4.7	157.0	29	1

		Type2	28	2.4	224.0	25	1
		Type2	29	2.4	214.0	25	1
		Type3	0	8.2	355.0	17	1
		Type3	1	6.1	487.0	16	1
		Type3	2	7.1	344.0	16	1
		Type3	3	9.8	288.0	18	1
		Type3	4	8.9	230.0	18	1
		Type3	5	7.9	432.0	17	1
		Type3	6	8.2	207.0	17	1
		Type3	7	7.5	443.0	17	1
		Type3	8	8.1	439.0	17	1
		Type3	9	6.2	223.0	16	1
		Type3	10	8.9	208.0	18	1
		Type3	11	9.6	463.0	18	1
		Type3	12	8.2	441.0	17	1
		Type3	13	7.2	323.0	16	1
		Type3	14	9.5	297.0	18	1
		Type3	15	8.0	412.0	17	1
		Type3	16	10.0	324.0	18	1
		Type3	17	7.4	271.0	17	1
		Type3	18	7.9	349.0	17	1
		Type3	19	7.3	409.0	16	1
		Type3	20	8.7	373.0	18	1
		Type3	21	7.2	254.0	16	1
		Type3	22	9.9	274.0	18	1
		Type3	23	7.9	278.0	17	1
		Type3	24	7.5	317.0	17	1
		Type3	25	6.1	260.0	16	1
		Type3	26	8.8	211.0	18	1
		Type3	27	9.7	272.0	18	1
		Type3	28	7.4	264.0	17	1
		Type3	29	9.2	284.0	18	1
		Type4	0	16.0	355.0	14	1
		Type4	1	11.3	487.0	12	1
		Type4	2	13.5	344.0	13	0
		Type4	3	19.4	288.0	16	0
		Type4	4	17.5	230.0	15	1
		Type4	5	15.3	432.0	14	1
		Type4	6	15.9	207.0	14	1
		Type4	7	14.3	443.0	13	1
		Type4	8	15.8	439.0	14	1
		Type4	9	11.5	223.0	12	1
		Type4	10	17.4	208.0	15	1
		Type4	11	19.0	463.0	16	1
		Type4	12	16.0	441.0	14	1
		Type4	13	13.8	323.0	13	1
		Type4	14	18.9	297.0	16	1
		Type4	15	15.5	412.0	14	1
		Type4	16	19.9	324.0	16	1
		Type4	17	14.1	271.0	13	1
		Type4	18	15.2	349.0	14	1
		Type4	19	13.8	409.0	13	1
		Type4	20	17.1	373.0	15	1
		Type4	21	13.8	254.0	13	1
		Type4	22	19.8	274.0	16	1
		Type4	23	15.3	278.0	14	1
		Type4	24	14.5	317.0	13	1
		Type4	25	11.3	260.0	12	1
		Type4	26	17.3	211.0	15	1
		Type4	27	19.2	272.0	16	1
		Type4	28	14.2	264.0	13	1

		Type4	29	18.2	284.0	15	1

Test Mode	Channel	Radar Type	Trial ID	Number Of Bursts	Wavform Length (s)	Radar Frequency	Detection (1: Yes; 0: No)
11AX160MIMO	5570	Type5	0	15	12	5570	1
		Type5	1	8	12	5570	1
		Type5	2	11	12	5570	1
		Type5	3	20	12	5570	1
		Type5	4	17	12	5570	1
		Type5	5	14	12	5570	1
		Type5	6	15	12	5570	1
		Type5	7	12	12	5570	1
		Type5	8	14	12	5570	1
		Type5	9	8	12	5570	1
		Type5	10	17	12	5498.7075	1
		Type5	11	19	12	5499.9075	1
		Type5	12	15	12	5497.5075	1
		Type5	13	12	12	5496.3075	1
		Type5	14	19	12	5499.5075	1
		Type5	15	14	12	5497.1075	1
		Type5	16	20	12	5500.3075	0
		Type5	17	12	12	5496.3075	1
		Type5	18	14	12	5497.1075	1
		Type5	19	12	12	5496.3075	1
		Type5	20	16	12	5641.6925	1
		Type5	21	12	12	5644.0925	1
		Type5	22	20	12	5639.6925	1
		Type5	23	14	12	5642.8925	1
		Type5	24	13	12	5643.2925	1
		Type5	25	8	12	5645.6925	1
		Type5	26	17	12	5641.2925	1
		Type5	27	19	12	5640.0925	1
		Type5	28	12	12	5643.6925	1
		Type5	29	18	12	5640.8925	1

TestMode	Channel	Radar Type	Trial ID	Burst ID	Burst Offset (μs)	Chirp Width (MHz)	Number Of Pulses	Pulse Width (μs)	PRI1 (μs)	PRI2 (μs)	PRI3 (μs)
11AX160 MIMO	5570	Type5	0	0	636185.0	13	2	77.8	1665.0	1477.0	---
		Type5	0	1	32674.0	13	1	51.9	1074.0	---	---
		Type5	0	2	226294.0	13	1	63.8	1584.0	---	---
		Type5	0	3	417976.0	13	3	96.6	1682.0	1786.0	1843.0
		Type5	0	4	611152.0	13	3	85.9	1795.0	1215.0	1729.0
		Type5	0	5	8789.0	13	2	73.7	1198.0	1549.0	---
		Type5	0	6	201917.0	13	2	77.2	1837.0	1819.0	---
		Type5	0	7	395530.0	13	2	68.4	1587.0	1114.0	---
		Type5	0	8	588564.0	13	2	76.7	2000.0	1155.0	---
		Type5	0	9	783794.0	13	1	53.2	1147.0	---	---
		Type5	0	10	177933.0	13	3	85.7	1433.0	1695.0	1394.0
		Type5	0	11	370624.0	13	3	94.3	1670.0	1426.0	1935.0
		Type5	0	12	564893.0	13	2	77.6	1294.0	1671.0	---
		Type5	0	13	759583.0	13	1	65.7	1512.0	---	---
		Type5	0	14	154262.0	13	3	93.5	1444.0	1130.0	1468.0

TestMode	Channel	Radar Type	Trial ID	Burst ID	Burst Offset (μs)	Chirp Width (MHz)	Number Of Pulses	Pulse Width (μs)	PRI1 (μs)	PRI2 (μs)	PRI3 (μs)
11AX160 MIMO	5570	Type5	1	0	653020.0	5	2	75.0	1880.0	1527.0	---
		Type5	1	1	1015643.0	5	3	99.4	1401.0	1262.0	1257.0
		Type5	1	2	1379398.0	5	2	67.4	1531.0	1403.0	---
		Type5	1	3	245489.0	5	2	73.6	1449.0	1041.0	---
		Type5	1	4	609113.0	5	1	65.9	1432.0	---	---
		Type5	1	5	970852.0	5	3	83.8	1356.0	1292.0	1419.0
		Type5	1	6	1335913.0	5	1	65.5	1543.0	---	---
		Type5	1	7	200406.0	5	3	98.6	1548.0	1796.0	1728.0

TestMode	Channel	Radar Type	Trial ID	Burst ID	Burst Offset (μs)	Chirp Width (MHz)	Number Of Pulses	Pulse Width (μs)	PRI1 (μs)	PRI2 (μs)	PRI3 (μs)
11AX160 MIMO	5570	Type5	2	0	409565.0	9	2	73.8	1806.0	1538.0	---
		Type5	2	1	673692.0	9	2	69.5	1117.0	1649.0	---
		Type5	2	2	938562.0	9	1	51.9	1651.0	---	---
		Type5	2	3	113209.0	9	3	84.6	1976.0	1032.0	1271.0
		Type5	2	4	376726.0	9	3	95.4	1060.0	1903.0	1388.0
		Type5	2	5	641212.0	9	2	68.0	1368.0	1351.0	---
		Type5	2	6	903714.0	9	3	89.6	1338.0	1514.0	1573.0
		Type5	2	7	80863.0	9	2	81.9	1022.0	1689.0	---
		Type5	2	8	344067.0	9	3	88.3	1810.0	1330.0	1838.0
		Type5	2	9	609331.0	9	1	53.7	1597.0	---	---
		Type5	2	10	871542.0	9	3	91.3	1961.0	1106.0	1001.0

TestMode	Channel	Radar Type	Trial ID	Burst ID	Burst Offset (μs)	Chirp Width (MHz)	Number Of Pulses	Pulse Width (μs)	PRI1 (μs)	PRI2 (μs)	PRI3 (μs)
11AX160 MIMO	5570	Type5	3	0	26541.0	19	2	68.1	1339.0	1355.0	---
		Type5	3	1	171821.0	19	1	58.7	1251.0	---	---
		Type5	3	2	316229.0	19	2	75.3	1136.0	1640.0	---
		Type5	3	3	461864.0	19	1	56.4	1753.0	---	---
		Type5	3	4	8677.0	19	3	99.7	1196.0	1708.0	1159.0
		Type5	3	5	153995.0	19	1	57.7	1013.0	---	---
		Type5	3	6	299238.0	19	1	59.5	1072.0	---	---
		Type5	3	7	443177.0	19	2	80.0	1482.0	1369.0	---
		Type5	3	8	587671.0	19	2	82.0	1993.0	1197.0	---
		Type5	3	9	135674.0	19	2	82.8	1883.0	1005.0	---
		Type5	3	10	279928.0	19	3	88.0	1061.0	1928.0	1101.0
		Type5	3	11	424279.0	19	3	93.2	1207.0	1907.0	1223.0
		Type5	3	12	570132.0	19	2	70.4	1526.0	1360.0	---
		Type5	3	13	117439.0	19	3	95.3	1171.0	1955.0	1775.0
		Type5	3	14	262502.0	19	2	81.9	1690.0	1545.0	---
		Type5	3	15	406573.0	19	3	98.5	1975.0	1169.0	1062.0
		Type5	3	16	553328.0	19	1	65.0	1767.0	---	---
		Type5	3	17	99799.0	19	3	85.4	1011.0	1637.0	1425.0
		Type5	3	18	244095.0	19	3	91.6	1878.0	1445.0	1325.0
		Type5	3	19	390012.0	19	2	67.3	1091.0	1218.0	---

TestMode	Channel	Radar Type	Trial ID	Burst ID	Burst Offset (μs)	Chirp Width (MHz)	Number Of Pulses	Pulse Width (μs)	PRI1 (μs)	PRI2 (μs)	PRI3 (μs)
11AX160 MIMO	5570	Type5	4	0	629614.0	16	2	67.9	1320.0	1133.0	---
		Type5	4	1	96856.0	16	1	62.3	1957.0	---	---
		Type5	4	2	267719.0	16	1	53.3	1592.0	---	---
		Type5	4	3	436784.0	16	3	90.0	1900.0	1153.0	1346.0
		Type5	4	4	608289.0	16	2	77.1	1166.0	1646.0	---
		Type5	4	5	75610.0	16	3	83.9	1278.0	1232.0	1459.0
		Type5	4	6	245638.0	16	3	89.1	1240.0	1384.0	1939.0
		Type5	4	7	416355.0	16	2	81.8	1833.0	1676.0	---
		Type5	4	8	588736.0	16	1	50.3	1075.0	---	---
		Type5	4	9	54571.0	16	3	87.1	1116.0	1996.0	1756.0
		Type5	4	10	225175.0	16	2	71.3	1225.0	1815.0	---
		Type5	4	11	394825.0	16	3	97.5	1884.0	1465.0	1132.0
		Type5	4	12	565361.0	16	3	90.6	1561.0	1040.0	1354.0
		Type5	4	13	33643.0	16	3	86.3	1596.0	1183.0	1792.0
		Type5	4	14	203957.0	16	3	97.6	1365.0	1073.0	1361.0
		Type5	4	15	373812.0	16	3	84.7	1021.0	1718.0	1854.0
		Type5	4	16	544060.0	16	3	99.7	1150.0	1244.0	1988.0

TestMode	Channel	Radar Type	Trial ID	Burst ID	Burst Offset (μs)	Chirp Width (MHz)	Number Of Pulses	Pulse Width (μs)	PRI1 (μs)	PRI2 (μs)	PRI3 (μs)
11AX160 MIMO	5570	Type5	5	0	15438.0	12	3	92.9	1085.0	1564.0	1407.0
		Type5	5	1	222486.0	12	2	67.7	1744.0	1747.0	---
		Type5	5	2	430731.0	12	1	65.8	1092.0	---	---
		Type5	5	3	637784.0	12	1	56.3	1851.0	---	---
		Type5	5	4	845342.0	12	1	53.7	1727.0	---	---
		Type5	5	5	196720.0	12	3	83.5	1679.0	1930.0	1025.0
		Type5	5	6	404955.0	12	1	65.8	1519.0	---	---
		Type5	5	7	610711.0	12	3	85.9	1134.0	1034.0	1808.0
		Type5	5	8	818057.0	12	2	76.3	1606.0	1926.0	---
		Type5	5	9	171459.0	12	2	81.5	1891.0	1714.0	---
		Type5	5	10	377969.0	12	3	89.4	1310.0	1594.0	1827.0
		Type5	5	11	586875.0	12	1	63.4	1568.0	---	---
		Type5	5	12	792834.0	12	2	69.6	1307.0	1925.0	---
		Type5	5	13	146044.0	12	2	74.5	1264.0	1846.0	---

TestMode	Channel	Radar Type	Trial ID	Burst ID	Burst Offset (μs)	Chirp Width (MHz)	Number Of Pulses	Pulse Width (μs)	PRI1 (μs)	PRI2 (μs)	PRI3 (μs)
11AX160 MIMO	5570	Type5	6	0	329022.0	13	3	96.6	1182.0	1609.0	1581.0
		Type5	6	1	521718.0	13	3	96.7	1829.0	1799.0	1154.0
		Type5	6	2	714222.0	13	3	86.5	1923.0	1396.0	1865.0
		Type5	6	3	112450.0	13	2	73.3	1908.0	1318.0	---
		Type5	6	4	306283.0	13	1	55.8	1688.0	---	---
		Type5	6	5	500239.0	13	1	55.4	1145.0	---	---
		Type5	6	6	690932.0	13	3	85.3	1336.0	1504.0	1820.0
		Type5	6	7	88645.0	13	2	79.4	1344.0	1893.0	---
		Type5	6	8	282508.0	13	1	65.7	1476.0	---	---
		Type5	6	9	475842.0	13	2	68.6	1008.0	1028.0	---
		Type5	6	10	667887.0	13	2	77.7	1972.0	1835.0	---
		Type5	6	11	64845.0	13	2	79.6	1882.0	1331.0	---
		Type5	6	12	257755.0	13	3	94.9	1830.0	1070.0	1349.0
		Type5	6	13	452335.0	13	1	61.4	1451.0	---	---
		Type5	6	14	643395.0	13	3	90.6	1233.0	1562.0	1887.0

TestMode	Channel	Radar Type	Trial ID	Burst ID	Burst Offset (μs)	Chirp Width (MHz)	Number Of Pulses	Pulse Width (μs)	PRI1 (μs)	PRI2 (μs)	PRI3 (μs)
11AX160 MIMO	5570	Type5	7	0	51446.0	10	1	52.6	1210.0	---	---
		Type5	7	1	292696.0	10	3	84.1	1314.0	1725.0	1529.0
		Type5	7	2	533989.0	10	3	97.7	1139.0	1868.0	1805.0
		Type5	7	3	775564.0	10	3	97.3	1341.0	1446.0	1755.0
		Type5	7	4	21542.0	10	3	98.8	1544.0	1386.0	1302.0
		Type5	7	5	263385.0	10	2	72.2	1771.0	1184.0	---
		Type5	7	6	505581.0	10	2	67.6	1175.0	1027.0	---
		Type5	7	7	747058.0	10	2	75.7	1026.0	1871.0	---
		Type5	7	8	989976.0	10	1	60.9	1798.0	---	---
		Type5	7	9	234024.0	10	1	64.2	1138.0	---	---
		Type5	7	10	475207.0	10	2	78.8	1784.0	1604.0	---
		Type5	7	11	715825.0	10	3	87.5	1511.0	1712.0	1683.0

TestMode	Channel	Radar Type	Trial ID	Burst ID	Burst Offset (μs)	Chirp Width (MHz)	Number Of Pulses	Pulse Width (μs)	PRI1 (μs)	PRI2 (μs)	PRI3 (μs)
11AX160 MIMO	5570	Type5	8	0	823112.0	13	1	54.1	1415.0	---	---
		Type5	8	1	174965.0	13	1	50.7	1221.0	---	---
		Type5	8	2	382216.0	13	1	52.3	1974.0	---	---
		Type5	8	3	587395.0	13	3	99.8	1558.0	1696.0	1949.0
		Type5	8	4	796897.0	13	2	68.4	1014.0	1099.0	---
		Type5	8	5	149042.0	13	2	80.8	1736.0	1505.0	---
		Type5	8	6	356750.0	13	1	62.5	1778.0	---	---
		Type5	8	7	563824.0	13	2	74.8	1149.0	1204.0	---
		Type5	8	8	772314.0	13	1	50.8	1049.0	---	---
		Type5	8	9	123796.0	13	1	54.0	1417.0	---	---
		Type5	8	10	331215.0	13	1	63.0	1730.0	---	---
		Type5	8	11	537402.0	13	3	91.8	1143.0	1270.0	1347.0
		Type5	8	12	744805.0	13	2	79.3	1274.0	1992.0	---
		Type5	8	13	98172.0	13	1	64.3	1937.0	---	---

TestMode	Channel	Radar Type	Trial ID	Burst ID	Burst Offset (μs)	Chirp Width (MHz)	Number Of Pulses	Pulse Width (μs)	PRI1 (μs)	PRI2 (μs)	PRI3 (μs)
11AX160 MIMO	5570	Type5	9	0	535615.0	6	1	63.4	1043.0	---	---
		Type5	9	1	898668.0	6	1	52.0	1863.0	---	---
		Type5	9	2	1259235.0	6	3	97.2	1973.0	1605.0	1583.0
		Type5	9	3	127106.0	6	2	78.7	1466.0	1743.0	---
		Type5	9	4	490358.0	6	2	74.2	1280.0	1219.0	---
		Type5	9	5	852409.0	6	3	88.7	1293.0	1934.0	1273.0
		Type5	9	6	1217152.0	6	1	54.3	1991.0	---	---
		Type5	9	7	82296.0	6	3	95.4	1580.0	1555.0	1791.0

TestMode	Channel	Radar Type	Trial ID	Burst ID	Burst Offset (μs)	Chirp Width (MHz)	Number Of Pulses	Pulse Width (μs)	PRI1 (μs)	PRI2 (μs)	PRI3 (μs)
11AX160 MIMO	5570	Type5	10	0	209249.0	16	2	73.7	1208.0	1497.0	---
		Type5	10	1	378386.0	16	3	97.4	1942.0	1754.0	1613.0
		Type5	10	2	548411.0	16	3	91.7	1999.0	1702.0	1462.0
		Type5	10	3	17733.0	16	1	66.2	1393.0	---	---
		Type5	10	4	187952.0	16	2	70.8	1968.0	1821.0	---
		Type5	10	5	359277.0	16	1	52.3	1740.0	---	---
		Type5	10	6	528886.0	16	2	78.9	1308.0	1984.0	---
		Type5	10	7	700166.0	16	2	70.9	1050.0	1358.0	---
		Type5	10	8	167197.0	16	2	75.6	1437.0	1430.0	---
		Type5	10	9	338262.0	16	1	59.1	1697.0	---	---
		Type5	10	10	508324.0	16	2	77.0	1397.0	1304.0	---
		Type5	10	11	678689.0	16	2	67.9	1803.0	1083.0	---
		Type5	10	12	146031.0	16	2	81.2	1720.0	1932.0	---
		Type5	10	13	316923.0	16	2	78.7	1247.0	1121.0	---
		Type5	10	14	488056.0	16	1	63.3	1634.0	---	---
		Type5	10	15	657326.0	16	2	68.9	1849.0	1423.0	---
		Type5	10	16	125509.0	16	1	59.3	1093.0	---	---

TestMode	Channel	Radar Type	Trial ID	Burst ID	Burst Offset (μs)	Chirp Width (MHz)	Number Of Pulses	Pulse Width (μs)	PRI1 (μs)	PRI2 (μs)	PRI3 (μs)
11AX160 MIMO	5570	Type5	11	0	263736.0	19	3	98.9	1381.0	1680.0	1488.0
		Type5	11	1	416459.0	19	2	82.3	1716.0	1855.0	---
		Type5	11	2	567902.0	19	3	86.7	1211.0	1400.0	1919.0
		Type5	11	3	92979.0	19	3	89.7	1861.0	1068.0	1282.0
		Type5	11	4	245155.0	19	3	98.6	1507.0	1194.0	1461.0
		Type5	11	5	397609.0	19	2	71.1	1921.0	1789.0	---
		Type5	11	6	551431.0	19	1	55.9	1947.0	---	---
		Type5	11	7	74413.0	19	2	67.9	1350.0	1372.0	---
		Type5	11	8	226559.0	19	3	84.4	1203.0	1107.0	1443.0
		Type5	11	9	380056.0	19	1	58.8	1715.0	---	---
		Type5	11	10	533408.0	19	1	65.6	1017.0	---	---
		Type5	11	11	55547.0	19	2	78.5	1911.0	1704.0	---
		Type5	11	12	207876.0	19	2	82.3	1845.0	1686.0	---
		Type5	11	13	359771.0	19	3	90.1	1938.0	1071.0	1266.0
		Type5	11	14	511297.0	19	3	90.2	1989.0	1089.0	1950.0
		Type5	11	15	36803.0	19	2	83.1	1943.0	1406.0	---
		Type5	11	16	189652.0	19	1	58.8	1742.0	---	---
		Type5	11	17	341809.0	19	2	77.0	1187.0	1657.0	---
		Type5	11	18	495737.0	19	1	55.0	1012.0	---	---

TestMode	Channel	Radar Type	Trial ID	Burst ID	Burst Offset (μs)	Chirp Width (MHz)	Number Of Pulses	Pulse Width (μs)	PRI1 (μs)	PRI2 (μs)	PRI3 (μs)
11AX160 MIMO	5570	Type5	12	0	22911.0	13	1	58.1	1929.0	---	---
		Type5	12	1	216473.0	13	1	52.1	1910.0	---	---
		Type5	12	2	410004.0	13	1	59.9	1971.0	---	---
		Type5	12	3	603671.0	13	1	60.2	1812.0	---	---
		Type5	12	4	794160.0	13	3	95.9	1399.0	1906.0	1608.0
		Type5	12	5	192251.0	13	2	79.9	1626.0	1859.0	---
		Type5	12	6	385590.0	13	2	78.5	1238.0	1917.0	---
		Type5	12	7	579862.0	13	1	53.8	1763.0	---	---
		Type5	12	8	773423.0	13	1	64.7	1800.0	---	---
		Type5	12	9	168898.0	13	1	61.4	1390.0	---	---
		Type5	12	10	361606.0	13	2	83.2	1692.0	1858.0	---
		Type5	12	11	553866.0	13	3	84.7	1533.0	1677.0	1638.0
		Type5	12	12	747241.0	13	3	88.7	1703.0	1528.0	1058.0
		Type5	12	13	144710.0	13	2	78.3	1258.0	1951.0	---
		Type5	12	14	337856.0	13	2	69.3	1731.0	1717.0	---

TestMode	Channel	Radar Type	Trial ID	Burst ID	Burst Offset (μs)	Chirp Width (MHz)	Number Of Pulses	Pulse Width (μs)	PRI1 (μs)	PRI2 (μs)	PRI3 (μs)
11AX160 MIMO	5570	Type5	13	0	664275.0	10	2	75.3	1994.0	1612.0	---
		Type5	13	1	907886.0	10	1	56.3	1456.0	---	---
		Type5	13	2	151316.0	10	2	67.7	1617.0	1185.0	---
		Type5	13	3	393746.0	10	1	55.6	1337.0	---	---
		Type5	13	4	635093.0	10	2	75.2	1421.0	1267.0	---
		Type5	13	5	876993.0	10	2	76.3	1359.0	1305.0	---
		Type5	13	6	121278.0	10	3	85.7	1547.0	1362.0	1924.0
		Type5	13	7	362696.0	10	3	98.4	1873.0	1550.0	1249.0
		Type5	13	8	604342.0	10	3	86.4	1779.0	1439.0	1046.0
		Type5	13	9	846453.0	10	3	93.6	1059.0	1031.0	1452.0
		Type5	13	10	91871.0	10	1	63.3	1328.0	---	---
		Type5	13	11	333050.0	10	3	92.4	1412.0	1673.0	1322.0

TestMode	Channel	Radar Type	Trial ID	Burst ID	Burst Offset (μs)	Chirp Width (MHz)	Number Of Pulses	Pulse Width (μs)	PRI1 (μs)	PRI2 (μs)	PRI3 (μs)
11AX160 MIMO	5570	Type5	14	0	361323.0	18	3	93.3	1983.0	1912.0	1535.0
		Type5	14	1	515261.0	18	2	69.1	1102.0	1794.0	---
		Type5	14	2	39025.0	18	3	86.9	1044.0	1152.0	1148.0
		Type5	14	3	190900.0	18	3	84.9	1894.0	1948.0	1118.0
		Type5	14	4	343941.0	18	2	72.3	1094.0	1916.0	---
		Type5	14	5	497624.0	18	1	51.7	1447.0	---	---
		Type5	14	6	20319.0	18	1	58.3	1429.0	---	---
		Type5	14	7	172999.0	18	1	60.8	1979.0	---	---
		Type5	14	8	325872.0	18	1	57.1	1641.0	---	---
		Type5	14	9	475841.0	18	3	88.9	1886.0	1964.0	1489.0
		Type5	14	10	1489.0	18	2	72.0	1909.0	1297.0	---
		Type5	14	11	153647.0	18	3	90.9	1261.0	1566.0	1370.0
		Type5	14	12	307096.0	18	1	59.8	1552.0	---	---
		Type5	14	13	458804.0	18	2	70.0	1759.0	1291.0	---
		Type5	14	14	610798.0	18	2	67.2	1625.0	1881.0	---
		Type5	14	15	134759.0	18	3	91.2	1382.0	1832.0	1661.0
		Type5	14	16	288306.0	18	1	56.5	1483.0	---	---
		Type5	14	17	441296.0	18	1	51.2	1237.0	---	---
		Type5	14	18	592780.0	18	2	74.1	1471.0	1245.0	---

TestMode	Channel	Radar Type	Trial ID	Burst ID	Burst Offset (μs)	Chirp Width (MHz)	Number Of Pulses	Pulse Width (μs)	PRI1 (μs)	PRI2 (μs)	PRI3 (μs)
11AX160 MIMO	5570	Type5	15	0	158286.0	12	2	76.9	1110.0	1140.0	---
		Type5	15	1	366024.0	12	1	50.2	1316.0	---	---
		Type5	15	2	573452.0	12	1	62.9	1520.0	---	---
		Type5	15	3	780619.0	12	1	64.7	1902.0	---	---
		Type5	15	4	132455.0	12	3	83.8	1410.0	1097.0	1621.0
		Type5	15	5	340207.0	12	1	65.4	1944.0	---	---
		Type5	15	6	548208.0	12	1	53.2	1024.0	---	---
		Type5	15	7	755333.0	12	1	51.7	1603.0	---	---
		Type5	15	8	107117.0	12	2	78.7	1804.0	1168.0	---
		Type5	15	9	314500.0	12	2	72.4	1030.0	1343.0	---
		Type5	15	10	522447.0	12	1	53.8	1327.0	---	---
		Type5	15	11	728517.0	12	2	73.6	1524.0	1553.0	---
		Type5	15	12	81611.0	12	2	66.7	1722.0	1122.0	---
		Type5	15	13	288948.0	12	2	82.5	1404.0	1019.0	---

TestMode	Channel	Radar Type	Trial ID	Burst ID	Burst Offset (μs)	Chirp Width (MHz)	Number Of Pulses	Pulse Width (μs)	PRI1 (μs)	PRI2 (μs)	PRI3 (μs)
11AX160 MIMO	5570	Type5	16	0	345766.0	20	3	87.6	1565.0	1055.0	1840.0
		Type5	16	1	490019.0	20	3	85.2	1735.0	1541.0	1408.0
		Type5	16	2	39073.0	20	3	84.8	1534.0	1889.0	1463.0
		Type5	16	3	183923.0	20	2	77.9	1749.0	1460.0	---
		Type5	16	4	328777.0	20	2	76.5	1518.0	1485.0	---
		Type5	16	5	474728.0	20	1	60.9	1540.0	---	---
		Type5	16	6	21394.0	20	2	83.0	1080.0	1010.0	---
		Type5	16	7	165992.0	20	2	80.4	1824.0	1752.0	---
		Type5	16	8	310973.0	20	2	67.5	1764.0	1181.0	---
		Type5	16	9	456884.0	20	1	62.1	1495.0	---	---
		Type5	16	10	3515.0	20	3	86.4	1773.0	1966.0	1263.0
		Type5	16	11	147928.0	20	3	84.3	1593.0	1188.0	1788.0
		Type5	16	12	293225.0	20	2	76.9	1226.0	1537.0	---
		Type5	16	13	436922.0	20	3	95.8	1192.0	1298.0	1844.0
		Type5	16	14	584015.0	20	1	55.2	1644.0	---	---
		Type5	16	15	130832.0	20	1	59.0	1402.0	---	---
		Type5	16	16	274684.0	20	3	94.5	1296.0	1700.0	1283.0
		Type5	16	17	418579.0	20	3	91.9	1970.0	1978.0	1165.0
		Type5	16	18	563464.0	20	3	85.2	1732.0	1551.0	1189.0
		Type5	16	19	112787.0	20	2	69.5	1038.0	1224.0	---

TestMode	Channel	Radar Type	Trial ID	Burst ID	Burst Offset (μs)	Chirp Width (MHz)	Number Of Pulses	Pulse Width (μs)	PRI1 (μs)	PRI2 (μs)	PRI3 (μs)
11AX160 MIMO	5570	Type5	17	0	429224.0	10	3	86.4	1259.0	1918.0	1455.0
		Type5	17	1	670241.0	10	3	92.2	1598.0	1719.0	1895.0
		Type5	17	2	912880.0	10	2	80.4	1816.0	1899.0	---
		Type5	17	3	158603.0	10	1	54.3	1335.0	---	---
		Type5	17	4	400824.0	10	1	53.1	1303.0	---	---
		Type5	17	5	641915.0	10	2	69.4	1503.0	1546.0	---
		Type5	17	6	883823.0	10	2	69.1	1279.0	1639.0	---
		Type5	17	7	128373.0	10	3	100.0	1375.0	1438.0	1595.0
		Type5	17	8	370379.0	10	2	79.6	1239.0	1705.0	---
		Type5	17	9	611194.0	10	3	88.4	1374.0	1579.0	1623.0
		Type5	17	10	855665.0	10	1	53.3	1016.0	---	---
		Type5	17	11	98897.0	10	1	65.3	1709.0	---	---

TestMode	Channel	Radar Type	Trial ID	Burst ID	Burst Offset (μs)	Chirp Width (MHz)	Number Of Pulses	Pulse Width (μs)	PRI1 (μs)	PRI2 (μs)	PRI3 (μs)
11AX160 MIMO	5570	Type5	18	0	292143.0	12	1	55.3	1920.0	---	---
		Type5	18	1	499633.0	12	1	58.3	1797.0	---	---
		Type5	18	2	706377.0	12	2	72.3	1610.0	1039.0	---
		Type5	18	3	58989.0	12	3	84.8	1131.0	1761.0	1721.0
		Type5	18	4	266161.0	12	2	82.5	1875.0	1431.0	---
		Type5	18	5	474469.0	12	1	63.3	1095.0	---	---
		Type5	18	6	680544.0	12	2	80.0	1119.0	1913.0	---
		Type5	18	7	33519.0	12	3	90.3	1660.0	1853.0	1123.0
		Type5	18	8	240319.0	12	3	91.1	1539.0	1783.0	1172.0
		Type5	18	9	447400.0	12	3	96.6	1525.0	1036.0	1385.0
		Type5	18	10	654516.0	12	2	82.7	1710.0	1990.0	---
		Type5	18	11	8083.0	12	1	50.7	1234.0	---	---
		Type5	18	12	215435.0	12	2	78.4	1047.0	1109.0	---
		Type5	18	13	421325.0	12	3	99.5	1299.0	1965.0	1869.0

TestMode	Channel	Radar Type	Trial ID	Burst ID	Burst Offset (μs)	Chirp Width (MHz)	Number Of Pulses	Pulse Width (μs)	PRI1 (μs)	PRI2 (μs)	PRI3 (μs)
11AX160 MIMO	5570	Type5	19	0	733725.0	10	3	88.6	1501.0	1067.0	1927.0
		Type5	19	1	977882.0	10	1	57.4	1723.0	---	---
		Type5	19	2	221197.0	10	3	96.6	1086.0	1658.0	1324.0
		Type5	19	3	462915.0	10	2	69.7	1751.0	1945.0	---
		Type5	19	4	705071.0	10	2	77.9	1642.0	1317.0	---
		Type5	19	5	947923.0	10	1	62.0	1866.0	---	---
		Type5	19	6	191373.0	10	3	88.4	1997.0	1077.0	1366.0
		Type5	19	7	432561.0	10	3	97.3	1790.0	1896.0	1367.0
		Type5	19	8	674004.0	10	3	96.2	1391.0	1787.0	1672.0
		Type5	19	9	915842.0	10	3	95.4	1020.0	1892.0	1414.0
		Type5	19	10	162176.0	10	1	54.8	1084.0	---	---
		Type5	19	11	403553.0	10	2	80.4	1850.0	1436.0	---

TestMode	Channel	Radar Type	Trial ID	Burst ID	Burst Offset (μs)	Chirp Width (MHz)	Number Of Pulses	Pulse Width (μs)	PRI1 (μs)	PRI2 (μs)	PRI3 (μs)
11AX160 MIMO	5570	Type5	20	0	483470.0	15	2	74.7	1619.0	1611.0	---
		Type5	20	1	666072.0	15	1	57.1	1560.0	---	---
		Type5	20	2	98810.0	15	3	91.9	1392.0	1475.0	1276.0
		Type5	20	3	279914.0	15	2	83.1	1809.0	1772.0	---
		Type5	20	4	462536.0	15	1	50.7	1003.0	---	---
		Type5	20	5	642324.0	15	2	79.2	1574.0	1600.0	---
		Type5	20	6	76831.0	15	1	58.7	1186.0	---	---
		Type5	20	7	257785.0	15	2	71.0	1521.0	1567.0	---
		Type5	20	8	438554.0	15	2	79.0	1777.0	1960.0	---
		Type5	20	9	620397.0	15	2	68.5	1284.0	1428.0	---
		Type5	20	10	54310.0	15	2	73.5	1904.0	1352.0	---
		Type5	20	11	235506.0	15	2	70.5	1864.0	1115.0	---
		Type5	20	12	417036.0	15	2	76.6	1045.0	1300.0	---
		Type5	20	13	597974.0	15	2	81.2	1160.0	1675.0	---
		Type5	20	14	32086.0	15	1	61.8	1277.0	---	---
		Type5	20	15	212751.0	15	3	94.9	1450.0	1206.0	1860.0

TestMode	Channel	Radar Type	Trial ID	Burst ID	Burst Offset (μs)	Chirp Width (MHz)	Number Of Pulses	Pulse Width (μs)	PRI1 (μs)	PRI2 (μs)	PRI3 (μs)
11AX160 MIMO	5570	Type5	21	0	526149.0	9	2	78.5	1653.0	1698.0	---
		Type5	21	1	767135.0	9	3	89.8	1174.0	1962.0	1167.0
		Type5	21	2	12955.0	9	1	59.4	1982.0	---	---
		Type5	21	3	254612.0	9	2	79.6	1633.0	1890.0	---
		Type5	21	4	496588.0	9	2	76.0	1112.0	1811.0	---
		Type5	21	5	739728.0	9	1	53.6	1144.0	---	---
		Type5	21	6	980872.0	9	2	80.9	1220.0	1053.0	---
		Type5	21	7	225249.0	9	1	61.6	1724.0	---	---
		Type5	21	8	467279.0	9	1	53.4	1901.0	---	---
		Type5	21	9	709720.0	9	1	59.9	1379.0	---	---
		Type5	21	10	951847.0	9	1	60.4	1453.0	---	---
		Type5	21	11	194839.0	9	3	91.4	1768.0	1726.0	1227.0

TestMode	Channel	Radar Type	Trial ID	Burst ID	Burst Offset (μs)	Chirp Width (MHz)	Number Of Pulses	Pulse Width (μs)	PRI1 (μs)	PRI2 (μs)	PRI3 (μs)
11AX160 MIMO	5570	Type5	22	0	261858.0	20	2	77.0	1191.0	1363.0	---
		Type5	22	1	407646.0	20	1	58.1	1248.0	---	---
		Type5	22	2	552319.0	20	1	62.1	1836.0	---	---
		Type5	22	3	99107.0	20	2	76.9	1334.0	1236.0	---
		Type5	22	4	243514.0	20	2	80.0	1914.0	1852.0	---
		Type5	22	5	389464.0	20	1	52.0	1701.0	---	---
		Type5	22	6	531093.0	20	3	88.6	1693.0	1995.0	1905.0
		Type5	22	7	81159.0	20	2	72.9	1922.0	1387.0	---
		Type5	22	8	225245.0	20	3	98.5	1839.0	1746.0	1389.0
		Type5	22	9	371906.0	20	1	57.9	1193.0	---	---
		Type5	22	10	514197.0	20	3	95.9	1659.0	1870.0	1066.0
		Type5	22	11	63561.0	20	1	53.5	1162.0	---	---
		Type5	22	12	207510.0	20	3	92.0	1745.0	1654.0	1458.0
		Type5	22	13	353638.0	20	1	57.3	1834.0	---	---
		Type5	22	14	497515.0	20	2	70.5	1684.0	1586.0	---
		Type5	22	15	45553.0	20	2	70.0	1042.0	1664.0	---
		Type5	22	16	189821.0	20	3	84.0	1765.0	1630.0	1176.0
		Type5	22	17	335330.0	20	2	76.1	1557.0	1057.0	---
		Type5	22	18	478825.0	20	3	93.2	1985.0	1018.0	1340.0
		Type5	22	19	27594.0	20	3	96.8	1760.0	1614.0	1817.0

TestMode	Channel	Radar Type	Trial ID	Burst ID	Burst Offset (μs)	Chirp Width (MHz)	Number Of Pulses	Pulse Width (μs)	PRI1 (μs)	PRI2 (μs)	PRI3 (μs)
11AX160 MIMO	5570	Type5	23	0	247117.0	12	1	50.1	1841.0	---	---
		Type5	23	1	453362.0	12	3	93.5	1590.0	1081.0	1413.0
		Type5	23	2	660875.0	12	2	68.8	1707.0	1577.0	---
		Type5	23	3	14140.0	12	1	56.3	1056.0	---	---
		Type5	23	4	220734.0	12	3	86.0	1953.0	1108.0	1987.0
		Type5	23	5	428367.0	12	2	75.2	1572.0	1536.0	---
		Type5	23	6	636681.0	12	1	54.4	1517.0	---	---
		Type5	23	7	843157.0	12	2	71.1	1329.0	1243.0	---
		Type5	23	8	195585.0	12	2	76.2	1940.0	1770.0	---
		Type5	23	9	403231.0	12	2	80.2	1098.0	1209.0	---
		Type5	23	10	610202.0	12	2	79.7	1588.0	1214.0	---
		Type5	23	11	815229.0	12	3	90.9	1615.0	1862.0	1601.0
		Type5	23	12	170267.0	12	2	68.7	1377.0	1441.0	---
		Type5	23	13	377306.0	12	2	67.4	1872.0	1313.0	---

TestMode	Channel	Radar Type	Trial ID	Burst ID	Burst Offset (μs)	Chirp Width (MHz)	Number Of Pulses	Pulse Width (μs)	PRI1 (μs)	PRI2 (μs)	PRI3 (μs)
11AX160 MIMO	5570	Type5	24	0	628071.0	11	3	94.0	1643.0	1748.0	1941.0
		Type5	24	1	853391.0	11	2	70.8	1177.0	1201.0	---
		Type5	24	2	156223.0	11	1	56.3	1006.0	---	---
		Type5	24	3	378734.0	11	3	96.7	1230.0	1163.0	1332.0
		Type5	24	4	601331.0	11	3	90.6	1217.0	1582.0	1498.0
		Type5	24	5	825462.0	11	2	74.5	1569.0	1281.0	---
		Type5	24	6	128265.0	11	3	92.6	1065.0	1669.0	1222.0
		Type5	24	7	351161.0	11	3	89.0	1493.0	1135.0	1380.0
		Type5	24	8	573425.0	11	3	96.5	1607.0	1822.0	1602.0
		Type5	24	9	798431.0	11	2	70.5	1141.0	1178.0	---
		Type5	24	10	100737.0	11	3	94.0	1009.0	1629.0	1956.0
		Type5	24	11	324661.0	11	1	55.8	1290.0	---	---
		Type5	24	12	546278.0	11	3	87.7	1435.0	1963.0	1164.0

TestMode	Channel	Radar Type	Trial ID	Burst ID	Burst Offset (μs)	Chirp Width (MHz)	Number Of Pulses	Pulse Width (μs)	PRI1 (μs)	PRI2 (μs)	PRI3 (μs)
11AX160 MIMO	5570	Type5	25	0	1253842.0	5	2	68.6	1306.0	1161.0	---
		Type5	25	1	119486.0	5	2	83.1	1420.0	1315.0	---
		Type5	25	2	482958.0	5	1	60.9	1687.0	---	---
		Type5	25	3	845641.0	5	2	77.7	1776.0	1158.0	---
		Type5	25	4	1208428.0	5	2	77.4	1793.0	1510.0	---
		Type5	25	5	74748.0	5	2	66.8	1576.0	1323.0	---
		Type5	25	6	438300.0	5	1	63.7	1333.0	---	---
		Type5	25	7	800152.0	5	3	91.2	1409.0	1681.0	1275.0

TestMode	Channel	Radar Type	Trial ID	Burst ID	Burst Offset (μs)	Chirp Width (MHz)	Number Of Pulses	Pulse Width (μs)	PRI1 (μs)	PRI2 (μs)	PRI3 (μs)
11AX160 MIMO	5570	Type5	26	0	545865.0	16	3	83.6	1632.0	1195.0	1000.0
		Type5	26	1	14067.0	16	3	89.4	1173.0	1627.0	1656.0
		Type5	26	2	184953.0	16	1	55.8	1532.0	---	---
		Type5	26	3	353759.0	16	3	90.9	1981.0	1554.0	1998.0
		Type5	26	4	526388.0	16	1	54.7	1825.0	---	---
		Type5	26	5	694806.0	16	3	97.7	1734.0	1202.0	1250.0
		Type5	26	6	163568.0	16	2	67.5	1571.0	1434.0	---
		Type5	26	7	333410.0	16	3	96.7	1589.0	1469.0	1268.0
		Type5	26	8	504006.0	16	2	68.3	1750.0	1954.0	---
		Type5	26	9	675297.0	16	2	78.3	1591.0	1082.0	---
		Type5	26	10	142890.0	16	1	55.0	1427.0	---	---
		Type5	26	11	312479.0	16	3	84.9	1129.0	1936.0	1199.0
		Type5	26	12	482953.0	16	2	74.6	1959.0	1856.0	---
		Type5	26	13	655022.0	16	1	63.3	1885.0	---	---
		Type5	26	14	121457.0	16	3	99.8	1035.0	1515.0	1120.0
		Type5	26	15	292606.0	16	1	63.6	1647.0	---	---
		Type5	26	16	461322.0	16	3	87.3	1931.0	1051.0	1831.0

TestMode	Channel	Radar Type	Trial ID	Burst ID	Burst Offset (μs)	Chirp Width (MHz)	Number Of Pulses	Pulse Width (μs)	PRI1 (μs)	PRI2 (μs)	PRI3 (μs)
11AX160 MIMO	5570	Type5	27	0	565136.0	19	3	85.6	1946.0	1078.0	1015.0
		Type5	27	1	89970.0	19	2	68.6	1029.0	1780.0	---
		Type5	27	2	243121.0	19	1	54.2	1111.0	---	---
		Type5	27	3	396034.0	19	1	61.2	1104.0	---	---
		Type5	27	4	546225.0	19	3	97.1	1157.0	1969.0	1100.0
		Type5	27	5	70998.0	19	3	98.3	1142.0	1699.0	1622.0
		Type5	27	6	224093.0	19	1	62.4	1655.0	---	---
		Type5	27	7	376127.0	19	2	80.2	1126.0	1769.0	---
		Type5	27	8	527806.0	19	3	87.5	1216.0	1448.0	1179.0
		Type5	27	9	52247.0	19	3	85.8	1847.0	1348.0	1472.0
		Type5	27	10	204582.0	19	3	88.1	1023.0	1124.0	1631.0
		Type5	27	11	357941.0	19	1	65.3	1848.0	---	---
		Type5	27	12	510977.0	19	1	52.5	1470.0	---	---
		Type5	27	13	33698.0	19	1	52.3	1312.0	---	---
		Type5	27	14	186023.0	19	2	74.1	1915.0	1200.0	---
		Type5	27	15	339327.0	19	1	54.9	1479.0	---	---
		Type5	27	16	491053.0	19	2	76.2	1376.0	1502.0	---
		Type5	27	17	14858.0	19	1	60.4	1758.0	---	---
		Type5	27	18	167387.0	19	2	81.5	1491.0	1103.0	---

TestMode	Channel	Radar Type	Trial ID	Burst ID	Burst Offset (μs)	Chirp Width (MHz)	Number Of Pulses	Pulse Width (μs)	PRI1 (μs)	PRI2 (μs)	PRI3 (μs)
11AX160 MIMO	5570	Type5	28	0	507709.0	10	1	50.5	1857.0	---	---
		Type5	28	1	750249.0	10	1	55.7	1246.0	---	---
		Type5	28	2	989003.0	10	3	85.8	1774.0	1002.0	1967.0
		Type5	28	3	235634.0	10	2	76.9	1125.0	1474.0	---
		Type5	28	4	477675.0	10	2	75.1	1254.0	1052.0	---
		Type5	28	5	718312.0	10	3	92.3	1180.0	1486.0	1492.0
		Type5	28	6	960895.0	10	2	78.1	1301.0	1757.0	---
		Type5	28	7	205370.0	10	3	92.2	1898.0	1252.0	1713.0
		Type5	28	8	446940.0	10	3	89.0	1260.0	1706.0	1411.0
		Type5	28	9	689225.0	10	2	70.9	1578.0	1620.0	---
		Type5	28	10	932305.0	10	1	63.1	1782.0	---	---
		Type5	28	11	176231.0	10	1	55.3	1522.0	---	---

TestMode	Channel	Radar Type	Trial ID	Burst ID	Burst Offset (μs)	Chirp Width (MHz)	Number Of Pulses	Pulse Width (μs)	PRI1 (μs)	PRI2 (μs)	PRI3 (μs)
11AX160 MIMO	5570	Type5	29	0	277485.0	17	3	83.4	1454.0	1205.0	1801.0
		Type5	29	1	437880.0	17	3	97.3	1319.0	1826.0	1635.0
		Type5	29	2	598445.0	17	3	90.4	1079.0	1986.0	1674.0
		Type5	29	3	97088.0	17	3	91.8	1563.0	1151.0	1802.0
		Type5	29	4	257251.0	17	3	98.2	1876.0	1977.0	1766.0
		Type5	29	5	419893.0	17	1	59.5	1952.0	---	---
		Type5	29	6	580724.0	17	2	80.0	1253.0	1137.0	---
		Type5	29	7	77366.0	17	3	86.5	1054.0	1128.0	1828.0
		Type5	29	8	238032.0	17	3	91.1	1105.0	1599.0	1442.0
		Type5	29	9	398605.0	17	3	93.5	1867.0	1373.0	1087.0
		Type5	29	10	562025.0	17	1	60.7	1033.0	---	---
		Type5	29	11	57684.0	17	2	67.2	1288.0	1405.0	---
		Type5	29	12	219083.0	17	1	61.8	1585.0	---	---
		Type5	29	13	379234.0	17	2	79.4	1933.0	1667.0	---
		Type5	29	14	540896.0	17	2	81.4	1096.0	1464.0	---
		Type5	29	15	37916.0	17	1	65.7	1496.0	---	---
		Type5	29	16	198794.0	17	2	76.0	1733.0	1255.0	---
		Type5	29	17	359754.0	17	2	81.0	1326.0	1668.0	---

Test Mode	Frequency[MHz]	Radar Type	Trial ID	Pulse width (μs)	PRI (μs)	Pulses per Hop	Detection (1: Yes; 0: No)
11AX160MIMO	5570	Type6	0	1	333.3	9	1
		Type6	1	1	333.3	9	1
		Type6	2	1	333.3	9	1
		Type6	3	1	333.3	9	1
		Type6	4	1	333.3	9	1
		Type6	5	1	333.3	9	1
		Type6	6	1	333.3	9	1
		Type6	7	1	333.3	9	1
		Type6	8	1	333.3	9	0
		Type6	9	1	333.3	9	1
		Type6	10	1	333.3	9	1
		Type6	11	1	333.3	9	1
		Type6	12	1	333.3	9	1
		Type6	13	1	333.3	9	1
		Type6	14	1	333.3	9	1
		Type6	15	1	333.3	9	1
		Type6	16	1	333.3	9	1
		Type6	17	1	333.3	9	1
		Type6	18	1	333.3	9	1
		Type6	19	1	333.3	9	1
		Type6	20	1	333.3	9	1
		Type6	21	1	333.3	9	1
		Type6	22	1	333.3	9	1
		Type6	23	1	333.3	9	1
		Type6	24	1	333.3	9	1
		Type6	25	1	333.3	9	1
		Type6	26	1	333.3	9	1
		Type6	27	1	333.3	9	1
		Type6	28	1	333.3	9	1
		Type6	29	1	333.3	9	1

******* END OF REPORT *******