ESP32-WROOM-32E
ESP32-WROOM-32UE

Datasheet

2.4 GHz Wi-Fi + Bluetooth® + Bluetooth LE module
Built around ESP32 series of SoCs, Xtensa® dual-core 32-bit LX6 microprocessor
4/8/16 MB flash available
26 GPIOs, rich set of peripherals
On-board PCB antenna or external antenna connector

ESP32-WROOM-32E

ESP32-WROOM-32UE

Version 1.6
Espressif Systems
Copyright © 2023

1 Module Overview

Note:

Check the link or the QR code to make sure that you use the latest version of this document:
https://espressif.com/documentation/esp32-wroom-32e_esp32-wroom-32ue_datasheet_en.pdf

1.1 Features

CPU and On-Chip Memory

- ESP32-D0WD-V3 or ESP32-D0WDR2-V3 embedded, Xtensa dual-core 32-bit LX6 microprocessor, up to 240 MHz
- 448 KB ROM
- 520 KB SRAM
- 16 KB SRAM in RTC
- ESP32-D0WDR2-V3 also provides 2 MB PSRAM

Wi-Fi

- 802.11b/g/n
- Bit rate: 802.11n up to 150 Mbps
- A-MPDU and A-MSDU aggregation
- 0.4 μs guard interval support
- Center frequency range of operating channel: 2412 ~ 2484 MHz

Bluetooth

- Bluetooth V4.2 BR/EDR and Bluetooth LE specification
- Class-1, class-2 and class-3 transmitter
- AFH
- CVSD and SBC

Peripherals

- SD card, UART, SPI, SDIO, I2C, LED PWM, Motor PWM, I2S, IR, pulse counter, GPIO, capacitive touch sensor, ADC, DAC, TWAI® (compatible with ISO 11898-1, i.e. CAN Specification 2.0)

Integrated Components on Module

- 40 MHz crystal oscillator
- 4/8/16 MB SPI flash

Antenna Options

- ESP32-WROOM-32E: On-board PCB antenna
- ESP32-WROOM-32UE: external antenna via a connector

Operating Conditions

- Operating voltage/Power supply: 3.0 ~ 3.6 V
- Operating ambient temperature:
  - 85 °C version: –40 ~ 85 °C
  - 105 °C version: –40 ~ 105 °C. Note that only the modules embedded with a 4/8 MB flash support this version.

Certification

- Bluetooth certification: BQB
- RF certification: See certificates for ESP32-WROOM-32E and ESP32-WROOM-32UE
- Green certification: REACH/RoHS

Reliability Test

- HTOL/HTSL/uHAST/TCT/ESD

1.2 Description

ESP32-WROOM-32E and ESP32-WROOM-32UE are two powerful, generic Wi-Fi + Bluetooth + Bluetooth LE MCU modules that target a wide variety of applications, ranging from low-power sensor networks to the most demanding tasks, such as voice encoding, music streaming and MP3 decoding.

ESP32-WROOM-32E comes with a PCB antenna, and ESP32-WROOM-32UE with a connector for an external antenna. **The information in this datasheet is applicable to both modules.**

The Series Comparison for the two modules is as follows:

Table 1: ESP32-WROOM-32E Series Comparison[1]

Ordering Code	Flash	PSRAM	Ambient Temp.[2] (°C)	Size[3] (mm)
ESP32-WROOM-32E-N4	4 MB (Quad SPI)	—	–40 ~ 85	18.0 × 25.5 × 3.1
ESP32-WROOM-32E-N8	8 MB (Quad SPI)	—	–40 ~ 85	
ESP32-WROOM-32E-N16	16 MB (Quad SPI)	—	–40 ~ 85	
ESP32-WROOM-32E-H4	4 MB (Quad SPI)	—	–40 ~ 105	
ESP32-WROOM-32E-H8	8 MB (Quad SPI)	—	–40 ~ 105	
ESP32-WROOM-32E-N4R2	4 MB (Quad SPI)	2 MB (Quad SPI)[4]	–40 ~ 85	
ESP32-WROOM-32E-N8R2	8 MB (Quad SPI)	2 MB (Quad SPI)[4]	–40 ~ 85	
ESP32-WROOM-32E-N16R2	16 MB (Quad SPI)	2 MB (Quad SPI)[4]	–40 ~ 85	

[1] This table shares the same notes presented in the table 2 below.

Table 2: ESP32-WROOM-32UE Series Comparison

Ordering Code	Flash	PSRAM	Ambient Temp.[2] (°C)	Size[3] (mm)
ESP32-WROOM-32UE-N4	4 MB (Quad SPI)	—	–40 ~ 85	18.0 × 19.2 × 3.2
ESP32-WROOM-32UE-N8	8 MB (Quad SPI)	—	–40 ~ 85	
ESP32-WROOM-32UE-N16	16 MB (Quad SPI)	—	–40 ~ 85	
ESP32-WROOM-32UE-H4	4 MB (Quad SPI)	—	–40 ~ 105	
ESP32-WROOM-32UE-H8	8 MB (Quad SPI)	—	–40 ~ 105	
ESP32-WROOM-32UE-N4R2	4 MB (Quad SPI)	2 MB (Quad SPI)[4]	–40 ~ 85	
ESP32-WROOM-32UE-N8R2	8 MB (Quad SPI)	2 MB (Quad SPI)[4]	–40 ~ 85	
ESP32-WROOM-32UE-N16R2	16 MB (Quad SPI)	2 MB (Quad SPI)[4]	–40 ~ 85	

[2] Ambient temperature specifies the recommended temperature range of the environment immediately outside the Espressif module.

[3] For details, refer to Section 7.1 *Physical Dimensions*.

[4] This module uses PSRAM integrated in the chip's package.

At the core of the module is the ESP32-D0WD-V3 chip or ESP32-D0WDR2-V3 chip*. The chip embedded is designed to be scalable and adaptive. There are two CPU cores that can be individually controlled, and the CPU clock frequency is adjustable from 80 MHz to 240 MHz. The chip also has a low-power coprocessor that can be used instead of the CPU to save power while performing tasks that do not require much computing power, such as monitoring of peripherals. ESP32 integrates a rich set of peripherals, ranging from capacitive touch sensors,

SD card interface, Ethernet, high-speed SPI, UART, I2S, and I2C.

Note:
* For details on the part numbers of the ESP32 family of chips, please refer to the document *ESP32 Series Datasheet*.

The integration of Bluetooth, Bluetooth LE and Wi-Fi ensures that a wide range of applications can be targeted, and that the module is all-around: using Wi-Fi allows a large physical range and direct connection to the Internet through a Wi-Fi router, while using Bluetooth allows the user to conveniently connect to the phone or broadcast low energy beacons for its detection. The sleep current of the ESP32 chip is less than 5 μA, making it suitable for battery powered and wearable electronics applications. The module supports a data rate of up to 150 Mbps, and 20 dBm output power at the antenna to ensure the widest physical range. As such the module does offer industry-leading specifications and the best performance for electronic integration, range, power consumption, and connectivity.

The operating system chosen for ESP32 is freeRTOS with LwIP; TLS 1.2 with hardware acceleration is built in as well. Secure (encrypted) over the air (OTA) upgrade is also supported, so that users can upgrade their products even after their release, at minimum cost and effort.

1.3 Applications

- Generic Low-power IoT Sensor Hub
- Generic Low-power IoT Data Loggers
- Cameras for Video Streaming
- Over-the-top (OTT) Devices
- Speech Recognition
- Image Recognition
- Mesh Network
- Home Automation
- Smart Building
- Industrial Automation
- Smart Agriculture
- Audio Applications
- Health Care Applications
- Wi-Fi-enabled Toys
- Wearable Electronics
- Retail & Catering Applications

Contents

1 Module Overview 2
1.1 Features 2
1.2 Description 3
1.3 Applications 4
2 Block Diagram 9
3 Pin Definitions 10
3.1 Pin Layout 10
3.2 Pin Description 10
3.3 Strapping Pins 12
4 Electrical Characteristics 14
4.1 Absolute Maximum Ratings 14
4.2 Recommended Operating Conditions 14
4.3 DC Characteristics (3.3 V, 25 °C) 14
4.4 Current Consumption Characteristics 15
4.5 Wi-Fi RF Characteristics 16
4.5.1 Wi-Fi RF Standards 16
4.5.2 Transmitter Characteristics 16
4.5.3 Receiver Characteristics 16
4.6 Bluetooth Radio 18
4.6.1 Receiver – Basic Data Rate 18
4.6.2 Transmitter – Basic Data Rate 18
4.6.3 Receiver – Enhanced Data Rate 19
4.6.4 Transmitter – Enhanced Data Rate 19
4.7 Bluetooth LE Radio 20
4.7.1 Receiver 20
4.7.2 Transmitter 20
5 Module Schematics 22
6 Peripheral Schematics 24
7 Physical Dimensions and PCB Land Pattern 25
7.1 Physical Dimensions 25
7.2 Recommended PCB Land Pattern 26
7.3 Dimensions of External Antenna Connector 28
8 Product Handling 29
8.1 Storage Conditions 29
8.2 Electrostatic Discharge (ESD) 29
8.3 Reflow Profile 29

8.4 Ultrasonic Vibration 30

9 Related Documentation and Resources 31

Revision History 32

List of Tables

1	ESP32-WROOM-32E Series Comparison	3
2	ESP32-WROOM-32UE Series Comparison	3
3	Pin Definitions	11
4	Strapping Pins	13
5	Parameter Descriptions of Setup and Hold Times for the Strapping Pins	13
6	Absolute Maximum Ratings	14
7	Recommended Operating Conditions	14
8	DC Characteristics (3.3 V, 25 °C)	14
9	Current Consumption Depending on RF Modes	15
10	Wi-Fi RF Standards	16
11	TX Power Characteristics	16
12	RX Sensitivity Characteristics	16
13	RX Maximum Input Level	17
14	Adjacent Channel Rejection	17
15	Receiver Characteristics – Basic Data Rate	18
16	Transmitter Characteristics – Basic Data Rate	18
17	Receiver Characteristics – Enhanced Data Rate	19
18	Transmitter Characteristics – Enhanced Data Rate	19
19	Receiver Characteristics – Bluetooth LE	20
20	Transmitter Characteristics – Bluetooth LE	21

List of Figures

1 ESP32-WROOM-32E Block Diagram 9
2 ESP32-WROOM-32UE Block Diagram 9
3 Pin Layout (Top View) 10
4 Setup and Hold Times for the Strapping Pins 13
5 ESP32-WROOM-32E Schematics 22
6 ESP32-WROOM-32UE Schematics 23
7 Peripheral Schematics 24
8 ESP32-WROOM-32E Physical Dimensions 25
9 ESP32-WROOM-32UE Physical Dimensions 25
10 ESP32-WROOM-32E Recommended PCB Land Pattern 26
11 ESP32-WROOM-32UE Recommended PCB Land Pattern 27
12 Dimensions of External Antenna Connector 28
13 Reflow Profile 29

2 Block Diagram

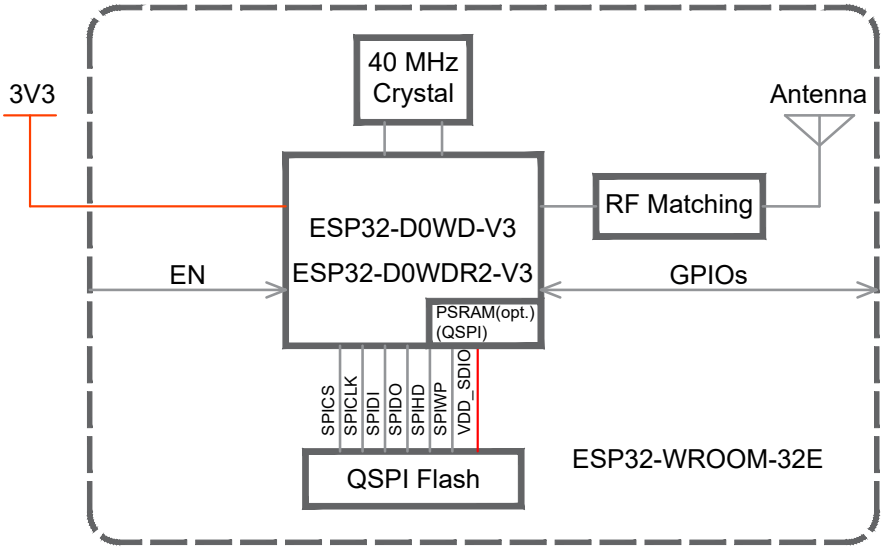

Figure 1: ESP32-WROOM-32E Block Diagram

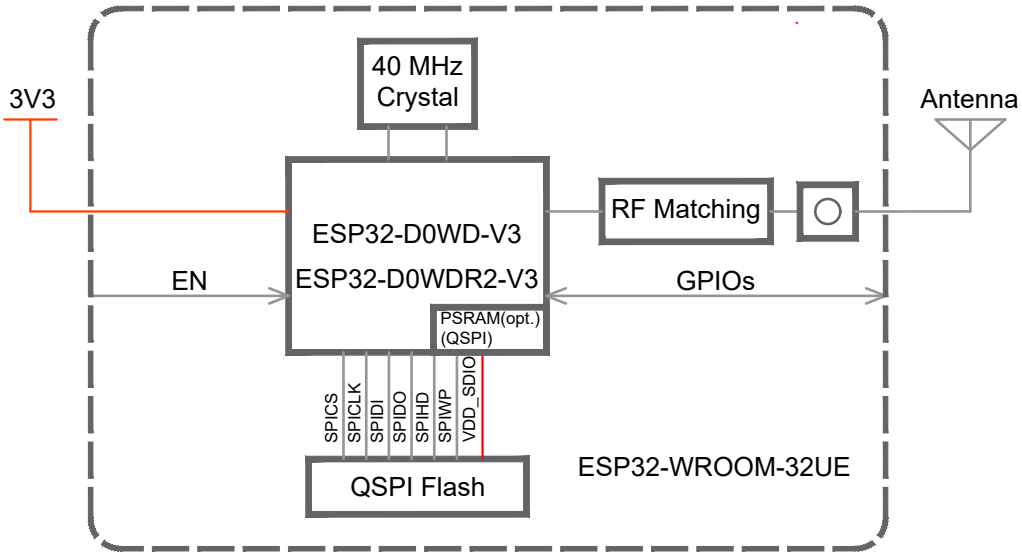

Figure 2: ESP32-WROOM-32UE Block Diagram

3 Pin Definitions

3.1 Pin Layout

The pin layout of ESP32-WROOM-32UE is the same as that of ESP32-WROOM-32E, except that ESP32-WROOM-32UE has no keepout zone.

The pin diagram below shows the approximate location of pins on the module. For the actual diagram drawn to scale, please refer to Figure 7.1 *Physical Dimensions*.

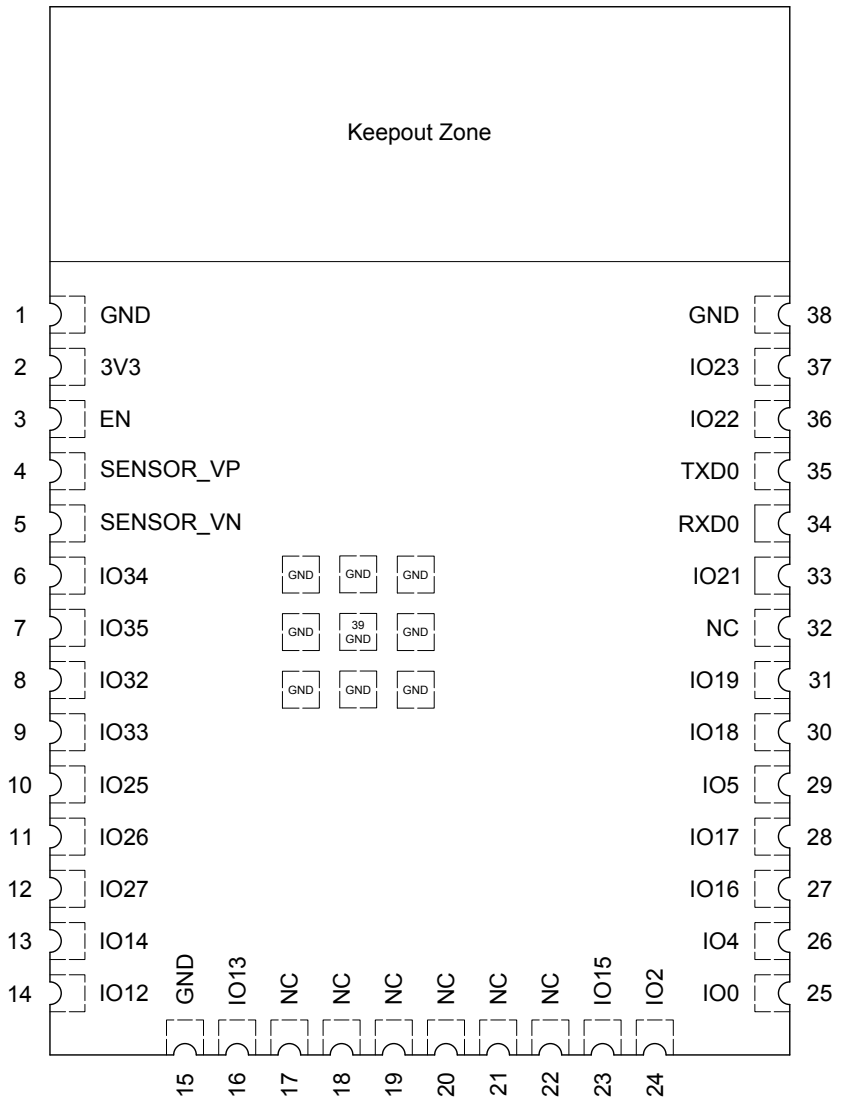

Figure 3: Pin Layout (Top View)

3.2 Pin Description

The module has 38 pins. See pin definitions in Table 3.

For peripheral pin configurations, please refer to *ESP32 Series Datasheet*.

Table 3: Pin Definitions

Name	No.	Type[1]	Function
GND	1	P	Ground
3V3	2	P	Power supply
EN	3	I	High: On; enables the chip Low: Off; the chip shuts down Note: Do not leave the pin floating.
SENSOR_VP	4	I	GPIO36, ADC1_CH0, RTC_GPIO0
SENSOR_VN	5	I	GPIO39, ADC1_CH3, RTC_GPIO3
IO34	6	I	GPIO34, ADC1_CH6, RTC_GPIO4
IO35	7	I	GPIO35, ADC1_CH7, RTC_GPIO5
IO32	8	I/O	GPIO32, XTAL_32K_P (32.768 kHz crystal oscillator input), ADC1_CH4, TOUCH9, RTC_GPIO9
IO33	9	I/O	GPIO33, XTAL_32K_N (32.768 kHz crystal oscillator output), ADC1_CH5, TOUCH8, RTC_GPIO8
IO25	10	I/O	GPIO25, DAC_1, ADC2_CH8, RTC_GPIO6, EMAC_RXD0
IO26	11	I/O	GPIO26, DAC_2, ADC2_CH9, RTC_GPIO7, EMAC_RXD1
IO27	12	I/O	GPIO27, ADC2_CH7, TOUCH7, RTC_GPIO17, EMAC_RX_DV
IO14	13	I/O	GPIO14, ADC2_CH6, TOUCH6, RTC_GPIO16, MTMS, HSPICLK, HS2_CLK, SD_CLK, EMAC_TXD2
IO12	14	I/O	GPIO12, ADC2_CH5, TOUCH5, RTC_GPIO15, MTDI, HSPIQ, HS2_DATA2, SD_DATA2, EMAC_TXD3
GND	15	P	Ground
IO13	16	I/O	GPIO13, ADC2_CH4, TOUCH4, RTC_GPIO14, MTCK, HSPID, HS2_DATA3, SD_DATA3, EMAC_RX_ER
NC	17	-	See note [2]
NC	18	-	See note [2]
NC	19	-	See note [2]
NC	20	-	See note [2]
NC	21	-	See note [2]
NC	22	-	See note [2]
IO15	23	I/O	GPIO15, ADC2_CH3, TOUCH3, MTDO, HSPICS0, RTC_GPIO13, HS2_CMD, SD_CMD, EMAC_RXD3
IO2	24	I/O	GPIO2, ADC2_CH2, TOUCH2, RTC_GPIO12, HSPIWP, HS2_DATA0, SD_DATA0
IO0	25	I/O	GPIO0, ADC2_CH1, TOUCH1, RTC_GPIO11, CLK_OUT1, EMAC_TX_CLK
IO4	26	I/O	GPIO4, ADC2_CH0, TOUCH0, RTC_GPIO10, HSPIHD, HS2_DATA1, SD_DATA1, EMAC_TX_ER
IO16[3]	27	I/O	GPIO16, HS1_DATA4, U2RXD, EMAC_CLK_OUT
IO17	28	I/O	GPIO17, HS1_DATA5, U2TXD, EMAC_CLK_OUT_180
IO5	29	I/O	GPIO5, VSPICS0, HS1_DATA6, EMAC_RX_CLK
IO18	30	I/O	GPIO18, VSPICLK, HS1_DATA7

Cont'd on next page

Table 3 – cont'd from previous page

Name	No.	Type[1]	Function
IO19	31	I/O	GPIO19, VSPIQ, U0CTS, EMAC_TXD0
NC	32	-	-
IO21	33	I/O	GPIO21, VSPIHD, EMAC_TX_EN
RXD0	34	I/O	GPIO3, U0RXD, CLK_OUT2
TXD0	35	I/O	GPIO1, U0TXD, CLK_OUT3, EMAC_RXD2
IO22	36	I/O	GPIO22, VSPIWP, U0RTS, EMAC_TXD1
IO23	37	I/O	GPIO23, VSPID, HS1_STROBE
GND	38	P	Ground

[1] P: power supply; I: input; O: output.

[2] Pins GPIO6 to GPIO11 on the ESP32-D0WD-V3/ESP32-D0WDR2-V3 chip are connected to the SPI flash integrated on the module and are not led out.

[3] In module variants that have embedded QSPI PSRAM, i.e., that embed ESP32-D0WDR2-V3, IO16 is connected to the embedded PSRAM and can not be used for other functions.

3.3 Strapping Pins

Note:
The content below is excerpted from Section Strapping Pins in *ESP32 Series Datasheet*. For the strapping pin mapping between the chip and modules, please refer to Chapter 5 *Module Schematics*.

ESP32 has five strapping pins:

- MTDI
- GPIO0
- GPIO2
- MTDO
- GPIO5

Software can read the values of these five bits from register "GPIO_STRAPPING".

During the chip's system reset release (power-on-reset, RTC watchdog reset and brownout reset), the latches of the strapping pins sample the voltage level as strapping bits of "0" or "1", and hold these bits until the chip is powered down or shut down. The strapping bits configure the device's boot mode, the operating voltage of VDD_SDIO and other initial system settings.

Each strapping pin is connected to its internal pull-up/pull-down during the chip reset. Consequently, if a strapping pin is unconnected or the connected external circuit is high-impedance, the internal weak pull-up/pull-down will determine the default input level of the strapping pins.

To change the strapping bit values, users can apply the external pull-down/pull-up resistances, or use the host MCU's GPIOs to control the voltage level of these pins when powering on ESP32.

After reset release, the strapping pins work as normal-function pins.

Refer to Table 4 for a detailed boot-mode configuration by strapping pins.

Table 4: Strapping Pins

Voltage of Internal LDO (VDD_SDIO)					
Pin	Default	3.3 V		1.8 V	
MTDI	Pull-down	0		1	
Booting Mode					
Pin	Default	SPI Boot		Download Boot	
GPIO0	Pull-up	1		0	
GPIO2	Pull-down	Don't-care		0	
Enabling/Disabling Debugging Log Print over U0TXD During Booting					
Pin	Default	U0TXD Active		U0TXD Silent	
MTDO	Pull-up	1		0	
Timing of SDIO Slave					
Pin	Default	FE Sampling FE Output	FE Sampling RE Output	RE Sampling FE Output	RE Sampling RE Output
MTDO	Pull-up	0	0	1	1
GPIO5	Pull-up	0	1	0	1

* FE: falling-edge, RE: rising-edge
* Firmware can configure register bits to change the settings of "Voltage of Internal LDO (VDD_SDIO)" and "Timing of SDIO Slave", after booting.
* The module integrates a 3.3 V SPI flash, so the pin MTDI cannot be set to 1 when the module is powered up.

The illustration below shows the setup and hold times for the strapping pins before and after the CHIP_PU signal goes high. Details about the parameters are listed in Table 5.

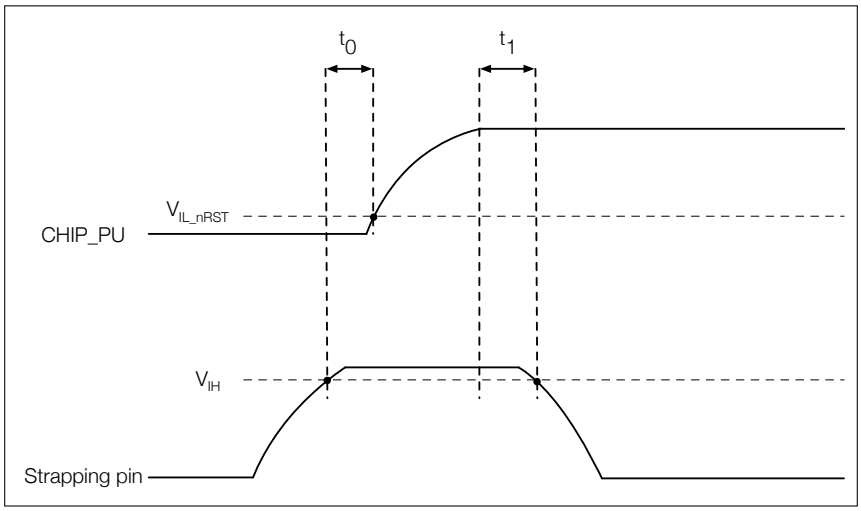

Figure 4: Setup and Hold Times for the Strapping Pins

Table 5: Parameter Descriptions of Setup and Hold Times for the Strapping Pins

Parameters	Description	Min.	Unit
t_0	Setup time before CHIP_PU goes from low to high	0	ms
t_1	Hold time after CHIP_PU goes high	1	ms

4 Electrical Characteristics

4.1 Absolute Maximum Ratings

Stresses above those listed in *Absolute Maximum Ratings* may cause permanent damage to the device. These are stress ratings only and functional operation of the device at these or any other conditions beyond those indicated under *Recommended Operating Conditions* is not implied. Exposure to absolute-maximum-rated conditions for extended periods may affect device reliability.

Table 6: Absolute Maximum Ratings

Symbol	Parameter	Min	Max	Unit
VDD33	Power supply voltage	–0.3	3.6	V
T_{STORE}	Storage temperature	–40	105	°C

* Please see Appendix IO MUX of *ESP32 Series Datasheet* for IO's power domain.

4.2 Recommended Operating Conditions

Table 7: Recommended Operating Conditions

Symbol	Parameter		Min	Typ	Max	Unit
VDD33	Power supply voltage		3.0	3.3	3.6	V
I_{VDD}	Current delivered by external power supply		0.5	—	—	A
T	Operating ambient temperature	85 °C version	–40	—	85	°C
		105 °C version			105	

4.3 DC Characteristics (3.3 V, 25 °C)

Table 8: DC Characteristics (3.3 V, 25 °C)

Symbol	Parameter	Min	Typ	Max	Unit
C_{IN}	Pin capacitance	—	2	—	pF
V_{IH}	High-level input voltage	0.75 × VDD[1]	—	VDD[1]+ 0.3	V
V_{IL}	Low-level input voltage	–0.3	—	0.25 × VDD[1]	V
I_{IH}	High-level input current	—	—	50	nA
I_{IL}	Low-level input current	—	—	50	nA
V_{OH}	High-level output voltage	0.8 × VDD[1]	—	—	V
V_{OL}	Low-level output voltage	—	—	0.1 × VDD[1]	V

Cont'd on next page

Table 8 – cont'd from previous page

Symbol	Parameter		Min	Typ	Max	Unit
I_{OH}	High-level source current (VDD[1]= 3.3 V, V_{OH} >= 2.64 V, output drive strength set to the maximum)	VDD3P3_CPU power domain [1, 2]	—	40	—	mA
		VDD3P3_RTC power domain [1, 2]	—	40	—	mA
		VDD_SDIO power domain [1, 3]	—	20	—	mA
I_{OL}	Low-level sink current (VDD[1]= 3.3 V, V_{OL} = 0.495 V, output drive strength set to the maximum)		—	28	—	mA
R_{PU}	Resistance of internal pull-up resistor		—	45	—	kΩ
R_{PD}	Resistance of internal pull-down resistor		—	45	—	kΩ
V_{IL_nRST}	Low-level input voltage of CHIP_PU to shut down the chip		—	—	0.6	V

[1] Please see Appendix IO MUX of *ESP32 Series Datasheet* for IO's power domain. VDD is the I/O voltage for a particular power domain of pins.

[2] For VDD3P3_CPU and VDD3P3_RTC power domain, per-pin current sourced in the same domain is gradually reduced from around 40 mA to around 29 mA, V_{OH}>=2.64 V, as the number of current-source pins increases.

[3] Pins occupied by flash and/or PSRAM in the VDD_SDIO power domain were excluded from the test.

4.4 Current Consumption Characteristics

Owing to the use of advanced power-management technologies, the module can switch between different power modes. For details on different power modes, please refer to Section *RTC and Low-Power Management* in *ESP32 Series Datasheet*.

Table 9: Current Consumption Depending on RF Modes

Work mode	Description		Average (mA)	Peak (mA)
Active (RF working)	TX	802.11b, 20 MHz, 1 Mbps, @19.5 dBm	239	379
		802.11g, 20 MHz, 54 Mbps, @15 dBm	190	276
		802.11n, 20 MHz, MCS7, @13 dBm	183	258
		802.11n, 40 MHz, MCS7, @13 dBm	165	211
	RX	802.11b/g/n, 20 MHz	112	112
		802.11n, 40 MHz	118	118

[1] The current consumption measurements are taken with a 3.3 V supply at 25 °C of ambient temperature at the RF port. All transmitters' measurements are based on a 50% duty cycle.

[2] The current consumption figures for in RX mode are for cases when the peripherals are disabled and the CPU idle.

4.5 Wi-Fi RF Characteristics

4.5.1 Wi-Fi RF Standards

Table 10: Wi-Fi RF Standards

Name		Description
Center frequency range of operating channel		2412 ~ 2484 MHz
Wi-Fi wireless standard		IEEE 802.11b/g/n
Data rate	20 MHz	11b: 1, 2, 5.5, 11 Mbps 11g: 6, 9, 12, 18, 24, 36, 48, 54 Mbps 11n: MCS0-7, 72.2 Mbps (Max)
	40 MHz	11n: MCS0-7, 150 Mbps (Max)
Antenna type		PCB antenna, external antenna[2]

[1] Device should operate in the center frequency range allocated by regional regulatory authorities. Target center frequency range is configurable by software.

[2] For the modules that use external antennas, the output impedance is 50 Ω. For other modules without external antennas, the output impedance is irrelevant.

4.5.2 Transmitter Characteristics

Target TX power is configurable based on device or certification requirements. The default characteristics are provided in Table 11.

Table 11: TX Power Characteristics

Rate	Typ (dBm)
11b, 1 Mbps	19.5
11b, 11 Mbps	19.5
11g, 6 Mbps	18
11g, 54 Mbps	14
11n, HT20, MCS0	18
11n, HT20, MCS7	13
11n, HT40, MCS0	18
11n, HT40, MCS7	13

4.5.3 Receiver Characteristics

Table 12: RX Sensitivity Characteristics

Rate	Typ (dBm)
1 Mbps	–97
2 Mbps	–94
5.5 Mbps	–92
11 Mbps	–88

Cont'd on next page

Table 12 – cont'd from previous page

Rate	Typ (dBm)
6 Mbps	–93
9 Mbps	–91
12 Mbps	–89
18 Mbps	–87
24 Mbps	–84
36 Mbps	–80
48 Mbps	–77
54 Mbps	–75
11n, HT20, MCS0	–92
11n, HT20, MCS1	–88
11n, HT20, MCS2	–86
11n, HT20, MCS3	–83
11n, HT20, MCS4	–80
11n, HT20, MCS5	–76
11n, HT20, MCS6	–74
11n, HT20, MCS7	–72
11n, HT40, MCS0	–89
11n, HT40, MCS1	–85
11n, HT40, MCS2	–83
11n, HT40, MCS3	–80
11n, HT40, MCS4	–76
11n, HT40, MCS5	–72
11n, HT40, MCS6	–71
11n, HT40, MCS7	–69

Table 13: RX Maximum Input Level

Rate	Typ (dBm)
11b, 1 Mbps	5
11b, 11 Mbps	5
11g, 6 Mbps	0
11g, 54 Mbps	–8
11n, HT20, MCS0	0
11n, HT20, MCS7	–8
11n, HT40, MCS0	0
11n, HT40, MCS7	–8

Table 14: Adjacent Channel Rejection

Rate	Typ (dB)
11b, 11 Mbps	35
11g, 6 Mbps	27

Cont'd on next page

Table 14 – cont'd from previous page

Rate	Typ (dB)
11g, 54 Mbps	13
11n, HT20, MCS0	27
11n, HT20, MCS7	12
11n, HT40, MCS0	16
11n, HT40, MCS7	7

4.6 Bluetooth Radio

4.6.1 Receiver – Basic Data Rate

Table 15: Receiver Characteristics – Basic Data Rate

Parameter	Conditions	Min	Typ	Max	Unit
Sensitivity @0.1% BER	—	–90	–89	–88	dBm
Maximum received signal @0.1% BER	—	0	—	—	dBm
Co-channel C/I	—	—	+7	—	dB
Adjacent channel selectivity C/I	F = F0 + 1 MHz	—	—	–6	dB
	F = F0 – 1 MHz	—	—	–6	dB
	F = F0 + 2 MHz	—	—	–25	dB
	F = F0 – 2 MHz	—	—	–33	dB
	F = F0 + 3 MHz	—	—	–25	dB
	F = F0 – 3 MHz	—	—	–45	dB
Out-of-band blocking performance	30 MHz ~ 2000 MHz	–10	—	—	dBm
	2000 MHz ~ 2400 MHz	–27	—	—	dBm
	2500 MHz ~ 3000 MHz	–27	—	—	dBm
	3000 MHz ~ 12.5 GHz	–10	—	—	dBm
Intermodulation	—	–36	—	—	dBm

4.6.2 Transmitter – Basic Data Rate

Table 16: Transmitter Characteristics – Basic Data Rate

Parameter	Conditions	Min	Typ	Max	Unit
RF transmit power*	—	—	0	—	dBm
Gain control step	—	—	3	—	dB
RF power control range	—	–12	—	+9	dBm
+20 dB bandwidth	—	—	0.9	—	MHz
Adjacent channel transmit power	F = F0 ± 2 MHz	—	–55	—	dBm
	F = F0 ± 3 MHz	—	–55	—	dBm
	F = F0 ± > 3 MHz	—	–59	—	dBm
$\Delta f1_{avg}$	—	—	—	155	kHz
$\Delta f2_{max}$	—	127	—	—	kHz

Cont'd on next page

Table 16 – cont'd from previous page

Parameter	Conditions	Min	Typ	Max	Unit
$\Delta f2_{avg}/\Delta f1_{avg}$	—	—	0.92	—	—
ICFT	—	—	–7	—	kHz
Drift rate	—	—	0.7	—	kHz/50 μs
Drift (DH1)	—	—	6	—	kHz
Drift (DH5)	—	—	6	—	kHz

* There are a total of eight power levels from 0 to 7, and the transmit power ranges from –12 dBm to 9 dBm. When the power level rises by 1, the transmit power increases by 3 dB. Power level 4 is used by default and the corresponding transmit power is 0 dBm.

4.6.3 Receiver – Enhanced Data Rate

Table 17: Receiver Characteristics – Enhanced Data Rate

Parameter	Conditions	Min	Typ	Max	Unit
$\pi/4$ DQPSK					
Sensitivity @0.01% BER	—	–90	–89	–88	dBm
Maximum received signal @0.01% BER	—	—	0	—	dBm
Co-channel C/I	—	—	11	—	dB
Adjacent channel selectivity C/I	F = F0 + 1 MHz	—	–7	—	dB
	F = F0 – 1 MHz	—	–7	—	dB
	F = F0 + 2 MHz	—	–25	—	dB
	F = F0 – 2 MHz	—	–35	—	dB
	F = F0 + 3 MHz	—	–25	—	dB
	F = F0 – 3 MHz	—	–45	—	dB
8DPSK					
Sensitivity @0.01% BER	—	–84	–83	–82	dBm
Maximum received signal @0.01% BER	—	—	–5	—	dBm
C/I c-channel	—	—	18	—	dB
Adjacent channel selectivity C/I	F = F0 + 1 MHz	—	2	—	dB
	F = F0 – 1 MHz	—	2	—	dB
	F = F0 + 2 MHz	—	–25	—	dB
	F = F0 – 2 MHz	—	–25	—	dB
	F = F0 + 3 MHz	—	–25	—	dB
	F = F0 – 3 MHz	—	–38	—	dB

4.6.4 Transmitter – Enhanced Data Rate

Table 18: Transmitter Characteristics – Enhanced Data Rate

Parameter	Conditions	Min	Typ	Max	Unit
RF transmit power (see note under Table 16)	—	—	0	—	dBm
Gain control step	—	—	3	—	dB
RF power control range	—	–12	—	+9	dBm

Parameter	Conditions	Min	Typ	Max	Unit
$\pi/4$ DQPSK max w0	—	—	–0.72	—	kHz
$\pi/4$ DQPSK max wi	—	—	–6	—	kHz
$\pi/4$ DQPSK max |wi + w0|	—	—	–7.42	—	kHz
8DPSK max w0	—	—	0.7	—	kHz
8DPSK max wi	—	—	–9.6	—	kHz
8DPSK max |wi + w0|	—	—	–10	—	kHz
$\pi/4$ DQPSK modulation accuracy	RMS DEVM	—	4.28	—	%
	99% DEVM	—	100	—	%
	Peak DEVM	—	13.3	—	%
8 DPSK modulation accuracy	RMS DEVM	—	5.8	—	%
	99% DEVM	—	100	—	%
	Peak DEVM	—	14	—	%
In-band spurious emissions	F = F0 ± 1 MHz	—	–46	—	dBm
	F = F0 ± 2 MHz	—	–44	—	dBm
	F = F0 ± 3 MHz	—	–49	—	dBm
	F = F0 +/– > 3 MHz	—	—	–53	dBm
EDR differential phase coding	—	—	100	—	%

4.7 Bluetooth LE Radio

4.7.1 Receiver

Table 19: Receiver Characteristics – Bluetooth LE

Parameter	Conditions	Min	Typ	Max	Unit
Sensitivity @30.8% PER	—	–94	–93	–92	dBm
Maximum received signal @30.8% PER	—	0	—	—	dBm
Co-channel C/I	—	—	+10	—	dB
Adjacent channel selectivity C/I	F = F0 + 1 MHz	—	–5	—	dB
	F = F0 – 1 MHz	—	–5	—	dB
	F = F0 + 2 MHz	—	–25	—	dB
	F = F0 – 2 MHz	—	–35	—	dB
	F = F0 + 3 MHz	—	–25	—	dB
	F = F0 – 3 MHz	—	–45	—	dB
Out-of-band blocking performance	30 MHz ~ 2000 MHz	–10	—	—	dBm
	2000 MHz ~ 2400 MHz	–27	—	—	dBm
	2500 MHz ~ 3000 MHz	–27	—	—	dBm
	3000 MHz ~ 12.5 GHz	–10	—	—	dBm
Intermodulation	—	–36	—	—	dBm

4.7.2 Transmitter

Table 20: Transmitter Characteristics – Bluetooth LE

Parameter	Conditions	Min	Typ	Max	Unit
RF transmit power (see note under Table 16)	—	—	0	—	dBm
Gain control step	—	—	3	—	dB
RF power control range	—	–12	—	+9	dBm
Adjacent channel transmit power	F = F0 ± 2 MHz	—	–55	—	dBm
	F = F0 ± 3 MHz	—	–57	—	dBm
	F = F0 ± > 3 MHz	—	–59	—	dBm
$\Delta f1_{avg}$	—	—	—	265	kHz
$\Delta f2_{max}$	—	210	—	—	kHz
$\Delta f2_{avg}/\Delta f1_{avg}$	—	—	+0.92	—	—
ICFT	—	—	–10	—	kHz
Drift rate	—	—	0.7	—	kHz/50 μs
Drift	—	—	2	—	kHz

5 Module Schematics

This is the reference design of the module.

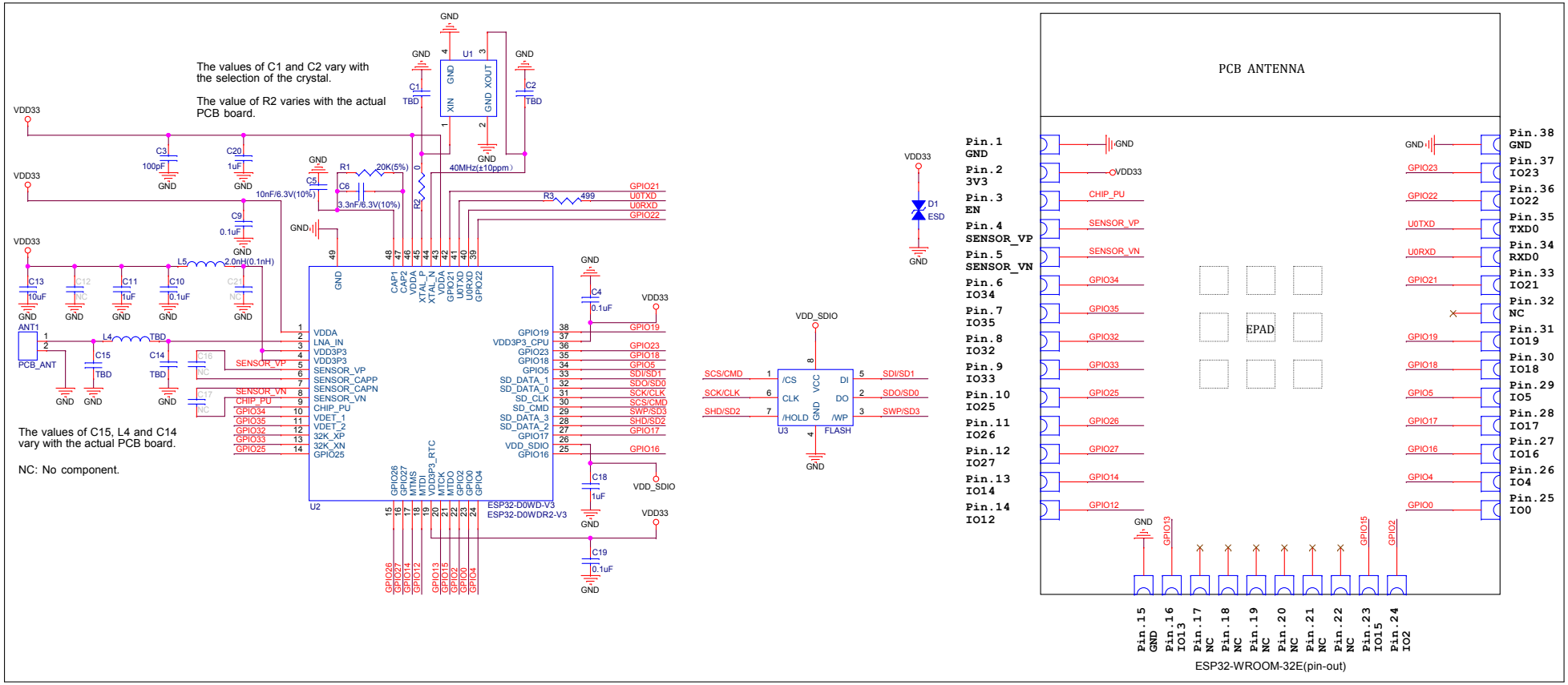

Figure 5: ESP32-WROOM-32E Schematics

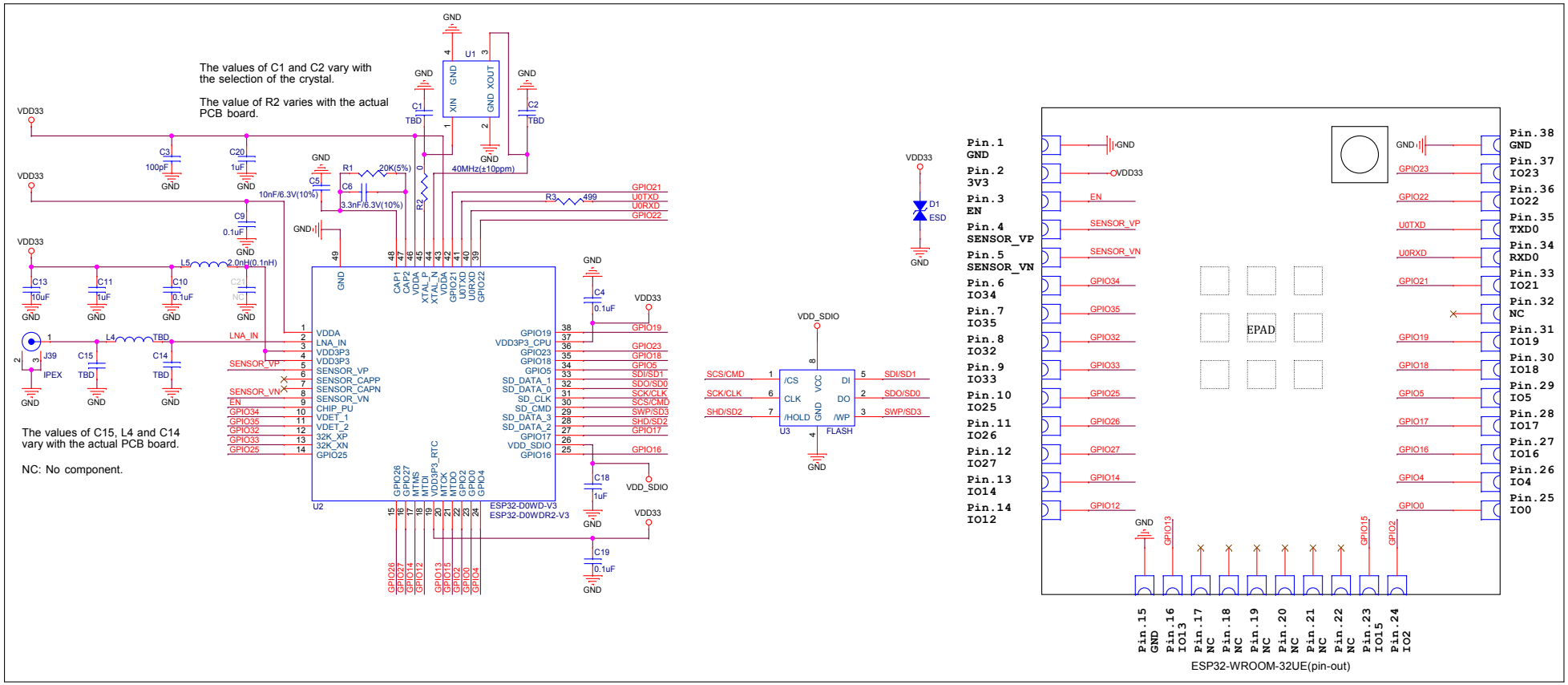

Figure 6: ESP32-WROOM-32UE Schematics

6 Peripheral Schematics

This is the typical application circuit of the module connected with peripheral components (for example, power supply, antenna, reset button, JTAG interface, and UART interface).

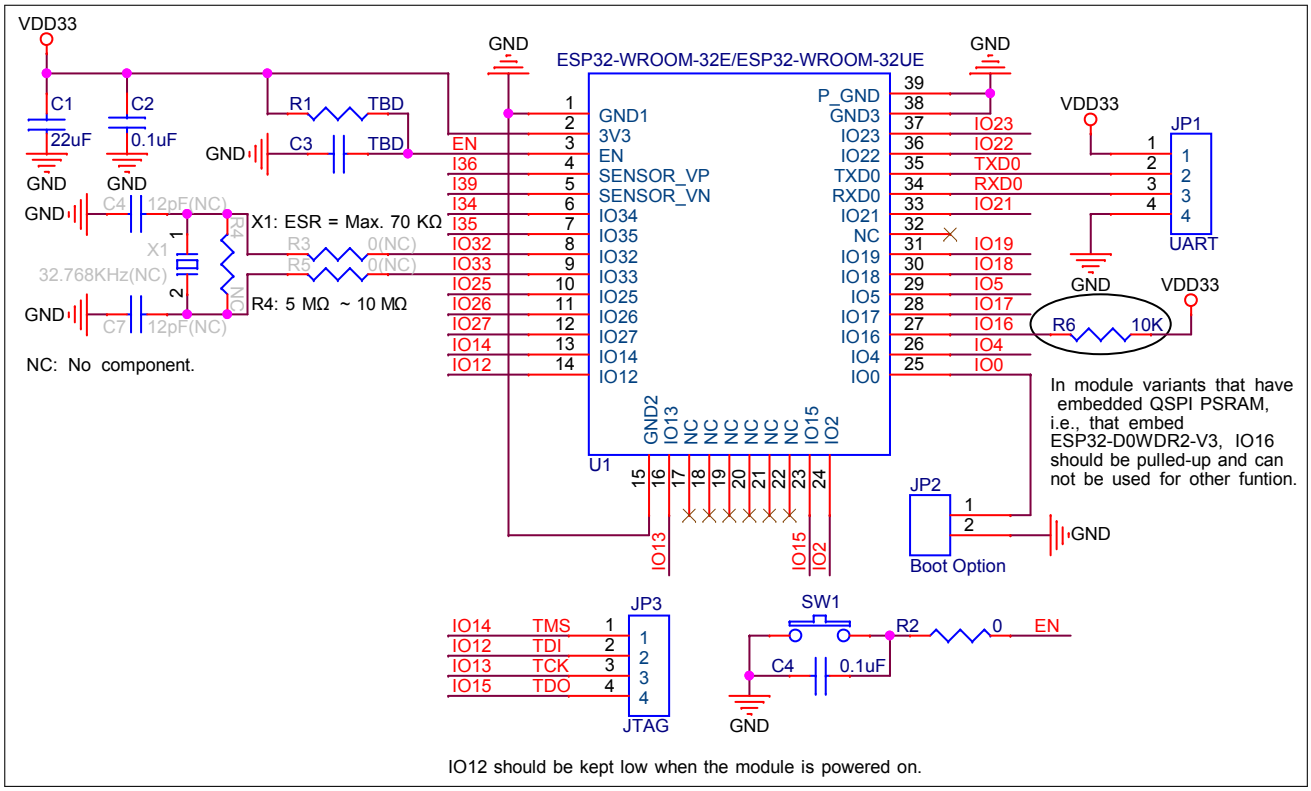

Figure 7: Peripheral Schematics

- Soldering EPAD Pin 39 to the ground of the base board is not a must, however, it can optimize thermal performance. If you choose to solder it, please apply the correct amount of soldering paste.
- To ensure that the power supply to the ESP32 chip is stable during power-up, it is advised to add an RC delay circuit at the EN pin. The recommended setting for the RC delay circuit is usually R = 10 kΩ and C = 1 μF. However, specific parameters should be adjusted based on the power-up timing of the module and the power-up and reset sequence timing of the chip. For ESP32's power-up and reset sequence timing diagram, please refer to Section *Power Scheme* in *ESP32 Series Datasheet*.

7 Physical Dimensions and PCB Land Pattern

7.1 Physical Dimensions

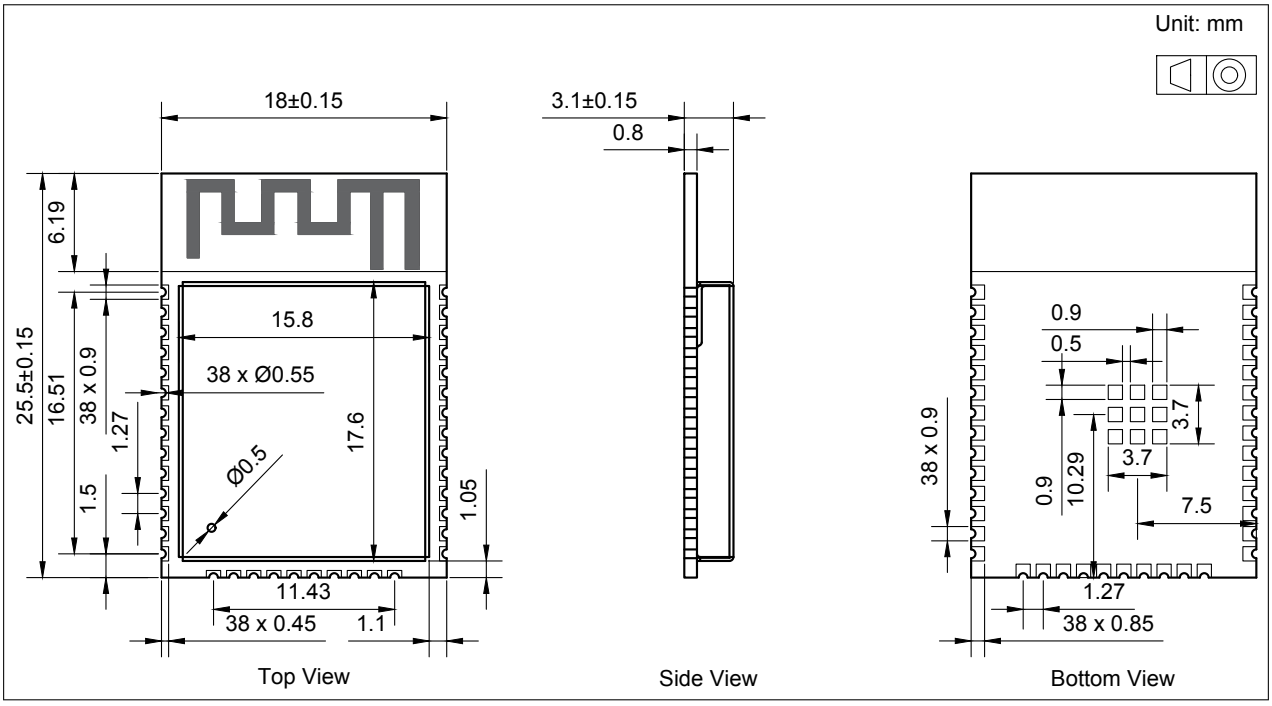

Figure 8: ESP32-WROOM-32E Physical Dimensions

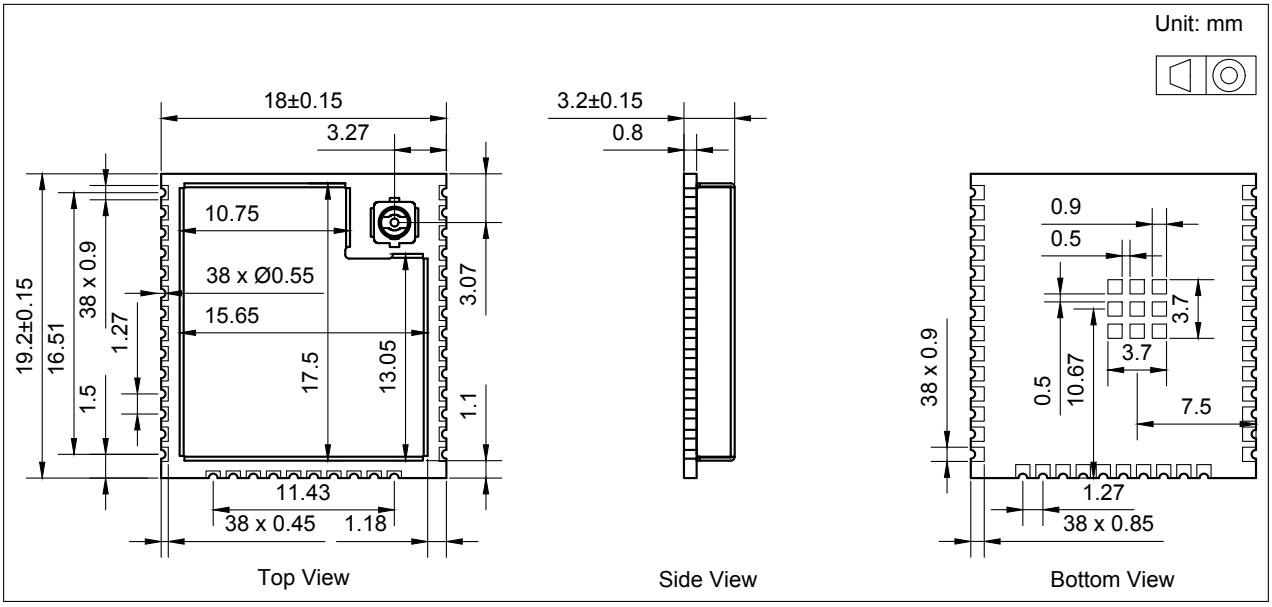

Figure 9: ESP32-WROOM-32UE Physical Dimensions

Note:

For information about tape, reel, and product marking, please refer to *Espressif Module Package Information*.

7.2 Recommended PCB Land Pattern

This section provides the following resources for your reference:

- Figures for recommended PCB land patterns with all the dimensions needed for PCB design. See Figure 10 *ESP32-WROOM-32E Recommended PCB Land Pattern* and Figure 11 *ESP32-WROOM-32UE Recommended PCB Land Pattern*.
- Source files of recommended PCB land patterns to measure dimensions not covered in Figure 10 and Figure 11. You can view the source files for ESP32-WROOM-32E and ESP32-WROOM-32UE with Autodesk Viewer.
- 3D models of ESP32-WROOM-32E and ESP32-WROOM-32UE. Please make sure that you download the 3D model file in .STEP format (beware that some browsers might add .txt).

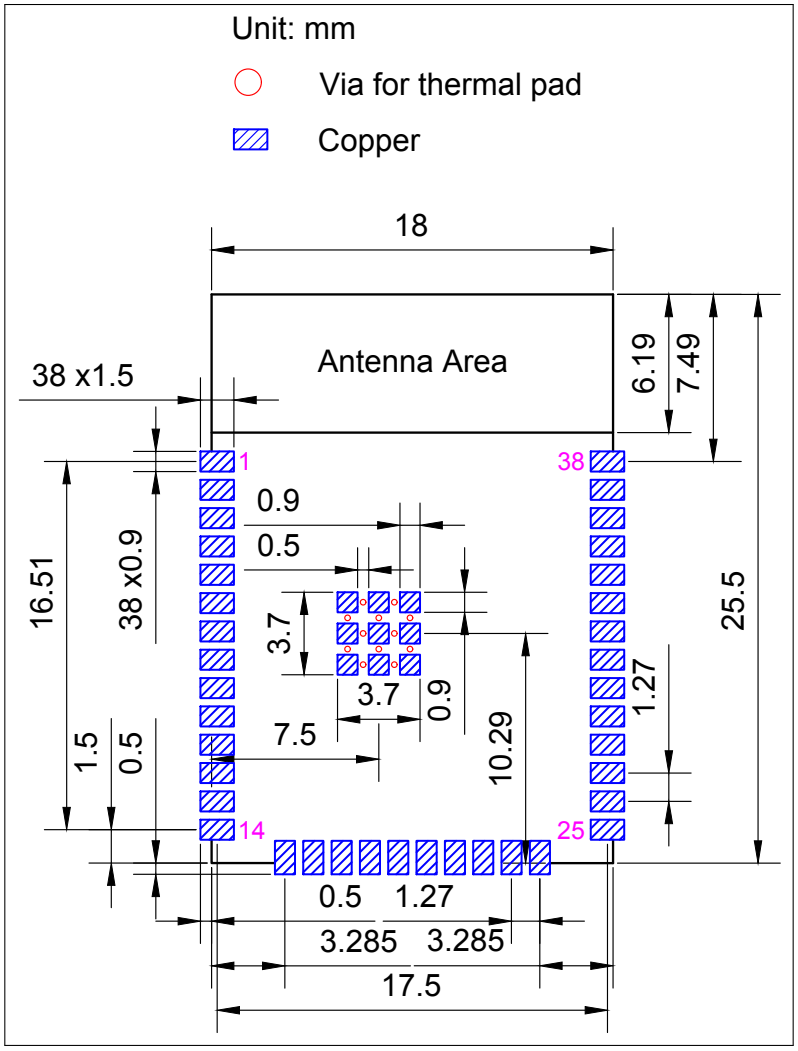

Figure 10: ESP32-WROOM-32E Recommended PCB Land Pattern

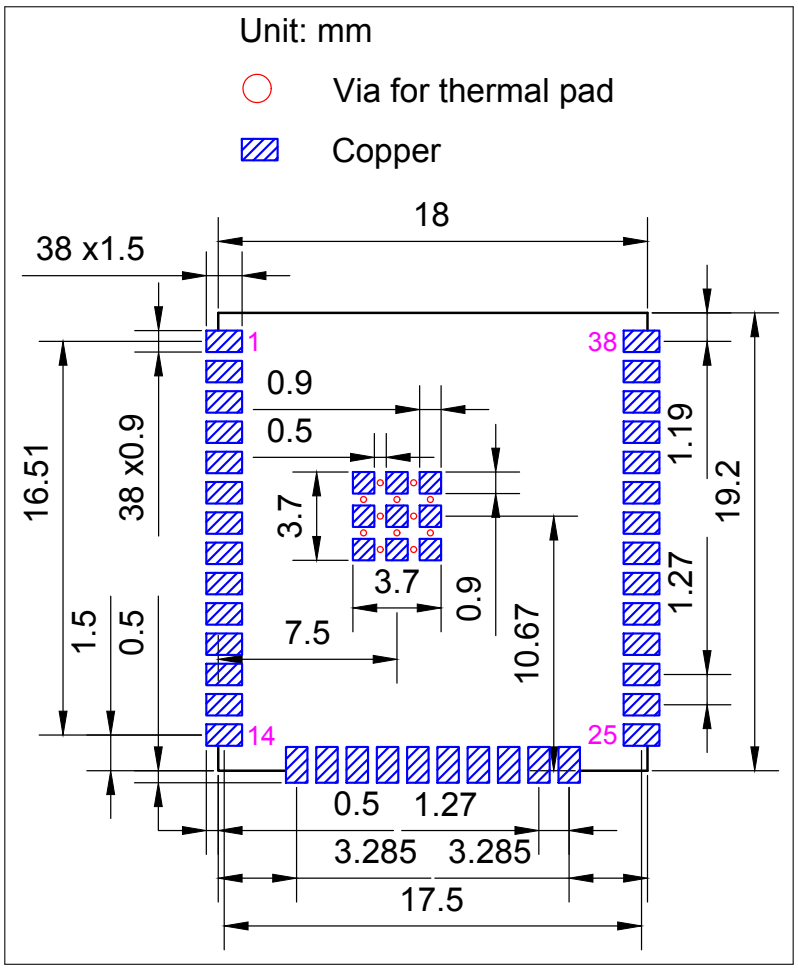

Figure 11: ESP32-WROOM-32UE Recommended PCB Land Pattern

7.3 Dimensions of External Antenna Connector

ESP32-WROOM-32UE uses the first generation external antenna connector as shown in Figure 12. This connector is compatible with the following connectors:

- U.FL Series connector from Hirose
- MHF I connector from I-PEX
- AMC connector from Amphenol

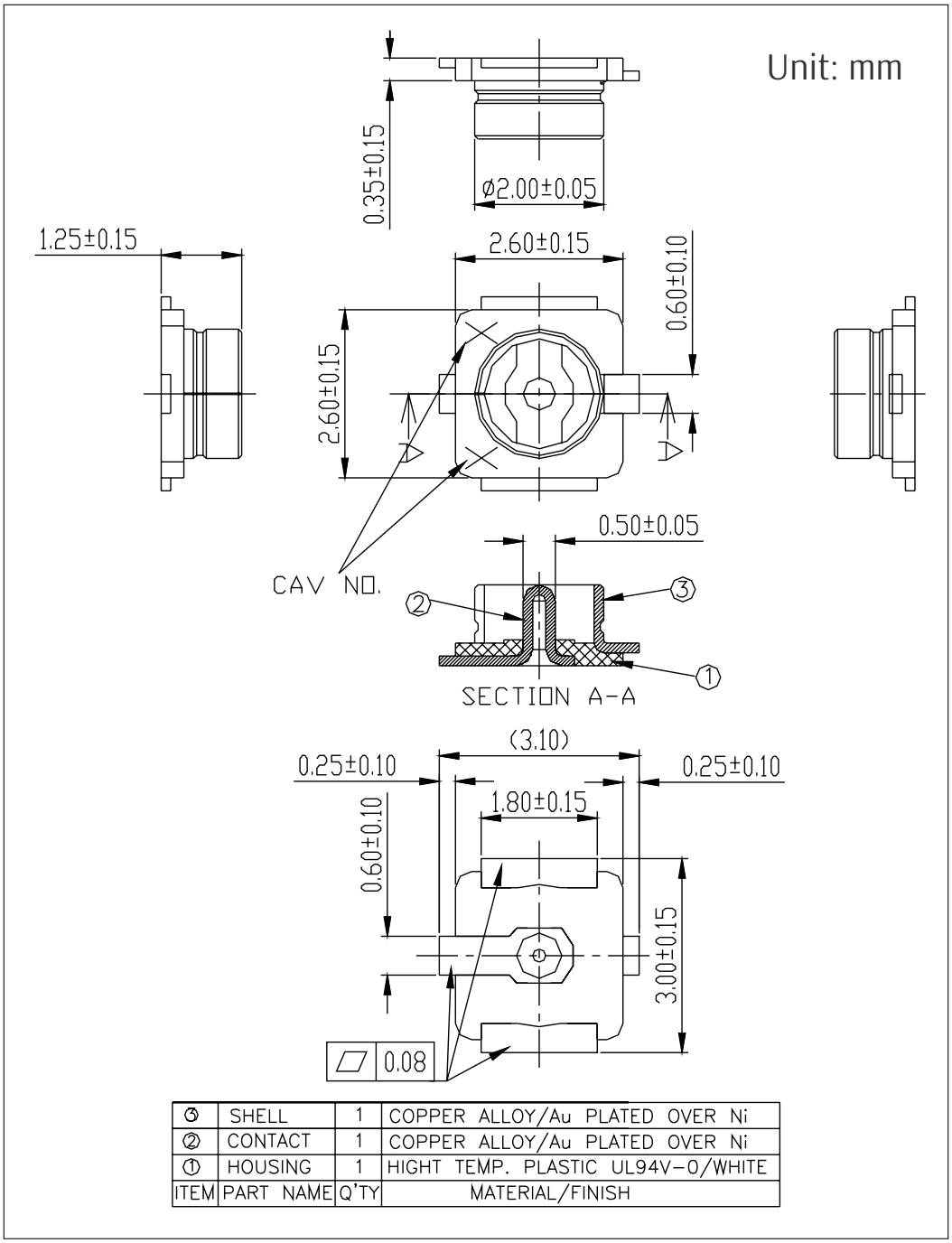

Figure 12: Dimensions of External Antenna Connector

8 Product Handling

8.1 Storage Conditions

The products sealed in moisture barrier bags (MBB) should be stored in a non-condensing atmospheric environment of < 40 °C and 90%RH. The module is rated at the moisture sensitivity level (MSL) of 3.

After unpacking, the module must be soldered within 168 hours with the factory conditions 25 ± 5 °C and 60 %RH. If the above conditions are not met, the module needs to be baked.

8.2 Electrostatic Discharge (ESD)

- Human body model (HBM): ±2000 V
- Charged-device model (CDM): ±500 V

8.3 Reflow Profile

Solder the module in a single reflow.

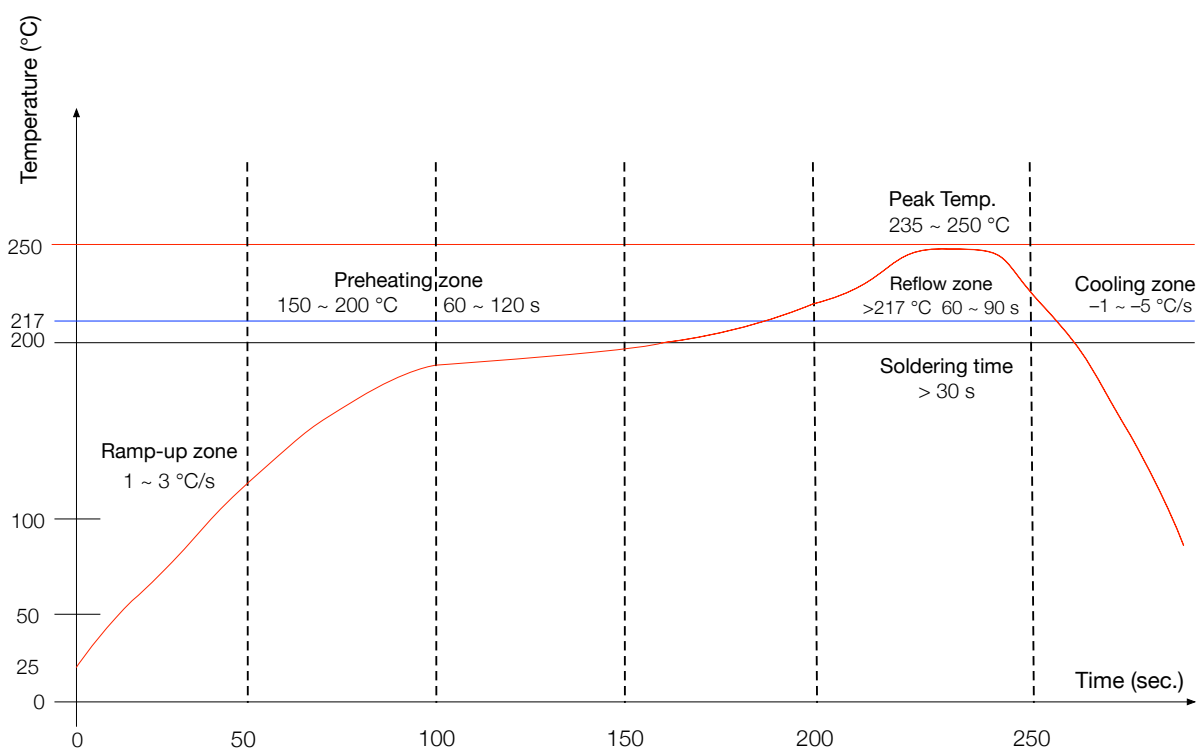

Ramp-up zone — Temp.: 25 ~ 150 °C Time: 60 ~ 90 s Ramp-up rate: 1 ~ 3 °C/s
Preheating zone — Temp.: 150 ~ 200 °C Time: 60 ~ 120 s
Reflow zone — Temp.: >217 °C Time: 60 ~ 90 s; Peak Temp.: 235 ~ 250 °C Time: 30 ~ 70 s
Cooling zone — Peak Temp. ~ 180 °C Ramp-down rate: −1 ~ −5 °C/s
Solder — Sn-Ag-Cu (SAC305) lead-free solder alloy

Figure 13: Reflow Profile

8.4 Ultrasonic Vibration

Avoid exposing Espressif modules to vibration from ultrasonic equipment, such as ultrasonic welders or ultrasonic cleaners. This vibration may induce resonance in the in-module crystal and lead to its malfunction or even failure. As a consequence, **the module may stop working or its performance may deteriorate**.

9 Related Documentation and Resources

Related Documentation

- ESP32 Series Datasheet – Specifications of the ESP32 hardware.
- ESP32 Technical Reference Manual – Detailed information on how to use the ESP32 memory and peripherals.
- ESP32 Hardware Design Guidelines – Guidelines on how to integrate the ESP32 into your hardware product.
- ESP32 ECO and Workarounds for Bugs – Correction of ESP32 design errors.
- *Certificates*
  https://espressif.com/en/support/documents/certificates
- *ESP32 Product/Process Change Notifications (PCN)*
  https://espressif.com/en/support/documents/pcns
- *ESP32 Advisories* – Information on security, bugs, compatibility, component reliability.
  https://espressif.com/en/support/documents/advisories
- *Documentation Updates and Update Notification Subscription*
  https://espressif.com/en/support/download/documents

Developer Zone

- ESP-IDF Programming Guide for ESP32 – Extensive documentation for the ESP-IDF development framework.
- *ESP-IDF* and other development frameworks on GitHub.
  https://github.com/espressif
- *ESP32 BBS Forum* – Engineer-to-Engineer (E2E) Community for Espressif products where you can post questions, share knowledge, explore ideas, and help solve problems with fellow engineers.
  https://esp32.com/
- *The ESP Journal* – Best Practices, Articles, and Notes from Espressif folks.
  https://blog.espressif.com/
- See the tabs *SDKs and Demos*, *Apps*, *Tools*, *AT Firmware*.
  https://espressif.com/en/support/download/sdks-demos

Products

- *ESP32 Series SoCs* – Browse through all ESP32 SoCs.
  https://espressif.com/en/products/socs?id=ESP32
- *ESP32 Series Modules* – Browse through all ESP32-based modules.
  https://espressif.com/en/products/modules?id=ESP32
- *ESP32 Series DevKits* – Browse through all ESP32-based devkits.
  https://espressif.com/en/products/devkits?id=ESP32
- *ESP Product Selector* – Find an Espressif hardware product suitable for your needs by comparing or applying filters.
  https://products.espressif.com/#/product-selector?language=en

Contact Us

- See the tabs *Sales Questions*, *Technical Enquiries*, *Circuit Schematic & PCB Design Review*, *Get Samples* (Online stores), *Become Our Supplier*, *Comments & Suggestions*.
  https://espressif.com/en/contact-us/sales-questions

Revision History

Date	Version	Release notes
2023-01-18	v1.6	Major updates: • Removed contents about hall sensor according to PCN20221202 Other updates: • Added source files of PCB land patterns and 3D models of the modules in Section 7.2: *Recommended PCB Land Pattern*
2022-07-20	v1.5	Added module variants embedded with ESP32-D0WDR2-V3 chip Added Table 1: *ESP32-WROOM-32E Series Comparison* and Table 2: *ESP32-WROOM-32UE Series Comparison* Added Figure 4 and Table 5 in Section 3.3: *Strapping Pins* Updated Section 8: *Product Handling*
2022-02-22	v1.4	Added a link to RF certificates in Section 1.1 Fixed a pin name typo in Figure 7
2021-11-08	v1.3	Added a 105 °C module variant Updated Table 6: *Absolute Maximum Ratings* Updated Table 7: *Recommended Operating Conditions* Replaced Espressif Product Ordering Information with ESP Product Selector Updated the description of TWAI in Section 1.1: *Features* Added a note below Figure 9: *ESP32-WROOM-32UE Physical Dimensions* Upgraded figure formatting Upgraded document formatting
2021-02-09	v1.2	Updated Figure 10: *ESP32-WROOM-32E Recommended PCB Land Pattern*, Figure 11: *ESP32-WROOM-32UE Recommended PCB Land Pattern*, Figure 8: *ESP32-WROOM-32E Physical Dimensions*, and Figure 9: *ESP32-WROOM-32UE Physical Dimensions*. Modified the note below Figure 13: *Reflow Profile*. Updated the trade mark from TWAI™ to TWAI®.
2020-11-02	v1.1	Updated the table 9. Added a note to EPAD in Section 7.2 *Recommended PCB Land Pattern*. Updated the note to RC circuit in Section 6 *Peripheral Schematics*.
2020-05-29	v1.0	Official release.
2020-05-18	v0.5	Preliminary release.

www.espressif.com

Disclaimer and Copyright Notice

Information in this document, including URL references, is subject to change without notice.

ALL THIRD PARTY'S INFORMATION IN THIS DOCUMENT IS PROVIDED AS IS WITH NO WARRANTIES TO ITS AUTHENTICITY AND ACCURACY.

NO WARRANTY IS PROVIDED TO THIS DOCUMENT FOR ITS MERCHANTABILITY, NON-INFRINGEMENT, FITNESS FOR ANY PARTICULAR PURPOSE, NOR DOES ANY WARRANTY OTHERWISE ARISING OUT OF ANY PROPOSAL, SPECIFICATION OR SAMPLE.

All liability, including liability for infringement of any proprietary rights, relating to use of information in this document is disclaimed. No licenses express or implied, by estoppel or otherwise, to any intellectual property rights are granted herein.

The Wi-Fi Alliance Member logo is a trademark of the Wi-Fi Alliance. The Bluetooth logo is a registered trademark of Bluetooth SIG.

All trade names, trademarks and registered trademarks mentioned in this document are property of their respective owners, and are hereby acknowledged.

Copyright © 2023 Espressif Systems (Shanghai) Co., Ltd. All rights reserved.