001-0009

Dipole Antenna
2400-2500 MHz/4910-5850 MHz

ELECTRICAL SPECIFICATION		
Model Name	001-0009	
Operating Frequency (MHz)	2400-2500	5150-5850
VSWR – max	≤ 2.0:1	
Gain (dBi)	2.0	2.0
Nominal Impedance (Ohms)	50	
Polarization	Linear vertical	

MECHANICAL SPECIFICATION	
Dimensions – mm (inches)	137 x 13 (5.4 x 0.51)
Weight – g (oz.)	22.0 (0.78)
Radome Material	Black

ENVIRONMENTAL SPECIFICATION	
Operating Temperature – °C (°F)	-40 to +85°C (-40 to +185°F)
UL Rating	UL 94HB

CONFIGURATION

PART NUMBER	DESCRIPTION
001-0009	2.4/5.5 GHz dipole antenna for Reverse Polarity SMA connector
080-0001	U.FL to Reverse Polarity SMA cable, 105 mm

MECHANICAL DRAWING

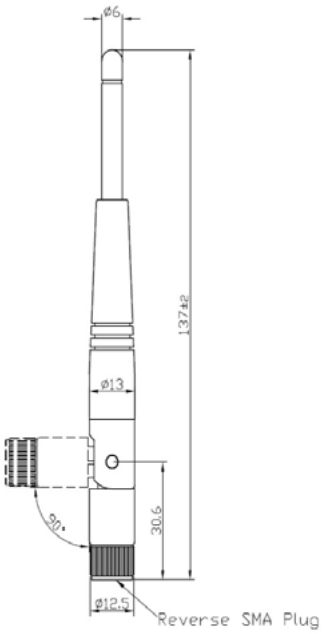

TYPICAL ANTENNA REFLECTION PERFORMANCE

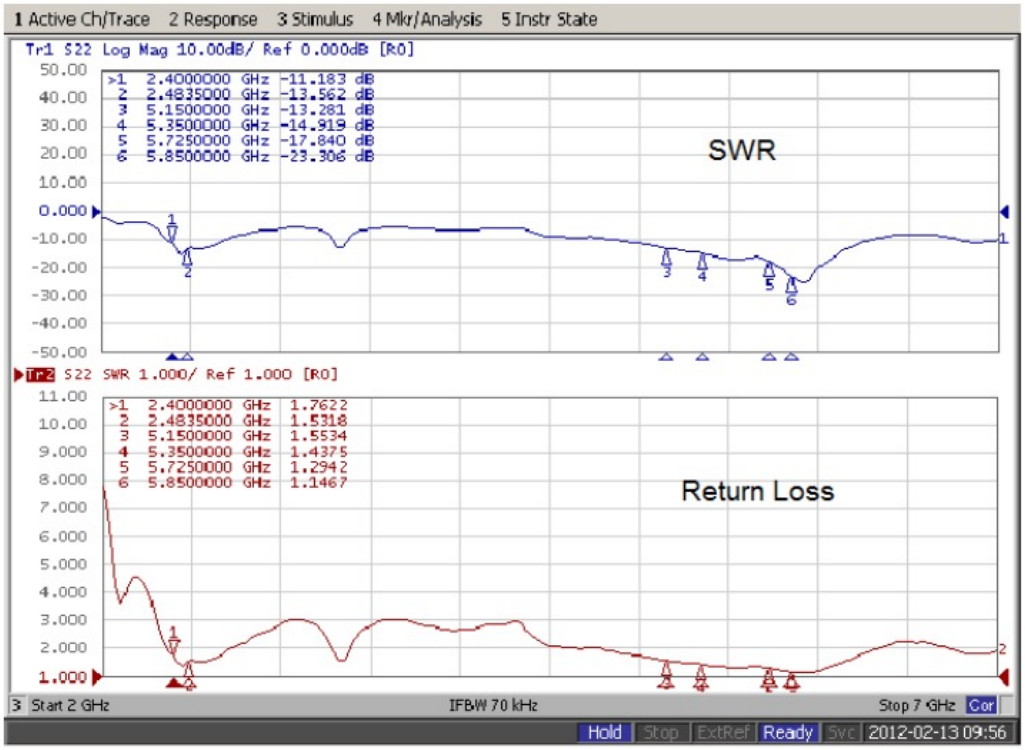

RADIATION PATTERNS

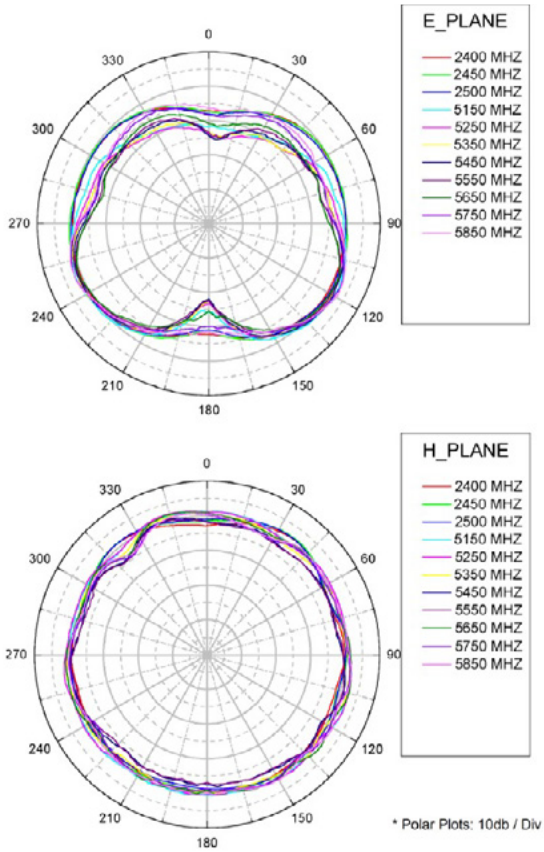

TE TECHNICAL SUPPORT CENTER

USA:	+1 (800) 522-6752
Canada:	+1 (905) 475-6222
Mexico:	+52 (0) 55-1106-0800
Latin/S. America:	+54 (0) 11-4733-2200
Germany:	+49 (0) 6251-133-1999
UK:	+44 (0) 800-267666
France:	+33 (0) 1-3420-8686
Netherlands:	+31 (0) 73-6246-999
China:	+86 (0) 400-820-6015

te.com

TE, and TE connectivity (logo) are trademarks owned or licensed by the TE Connectivity Ltd. family of companies. All other logos, products and/or company names referred to herein might be trademarks of their respective owners.

The information given herein, including drawings, illustrations and schematics which are intended for illustration purposes only, is believed to be reliable. However, TE Connectivity makes no warranties as to its accuracy or completeness and disclaims any liability in connection with its use. TE Connectivity's obligations shall only be as set forth in TE Connectivity's Standard Terms and Conditions of Sale for this product and in no case will TE Connectivity be liable for any incidental, indirect or consequential damages arising out of the sale, resale, use or misuse of the product. Users of TE Connectivity products should make their own evaluation to determine the suitability of each such product for the specific application.

TE Connectivity warrants to the original end user customer of its products that its products are free from defects in material and workmanship. Subject to conditions and limitations TE Connectivity will, at its option, either repair or replace any part of its products that prove defective because of improper workmanship or materials. This limited warranty is in force for the useful lifetime of the original end product into which the TE Connectivity product is installed. Useful lifetime of the original end product may vary but is not warrantied to exceed one (1) year from the original date of the end product purchase.

©2022 TE Connectivity. All Rights Reserved.

08/22 **Original**

Laird™
External Antennas
is now part of
TE connectivity

Mouser Electronics

Authorized Distributor

Click to View Pricing, Inventory, Delivery & Lifecycle Information:

TE Connectivity:
001-0009