DOG TRAINING COLLAR

Model
AD-D01

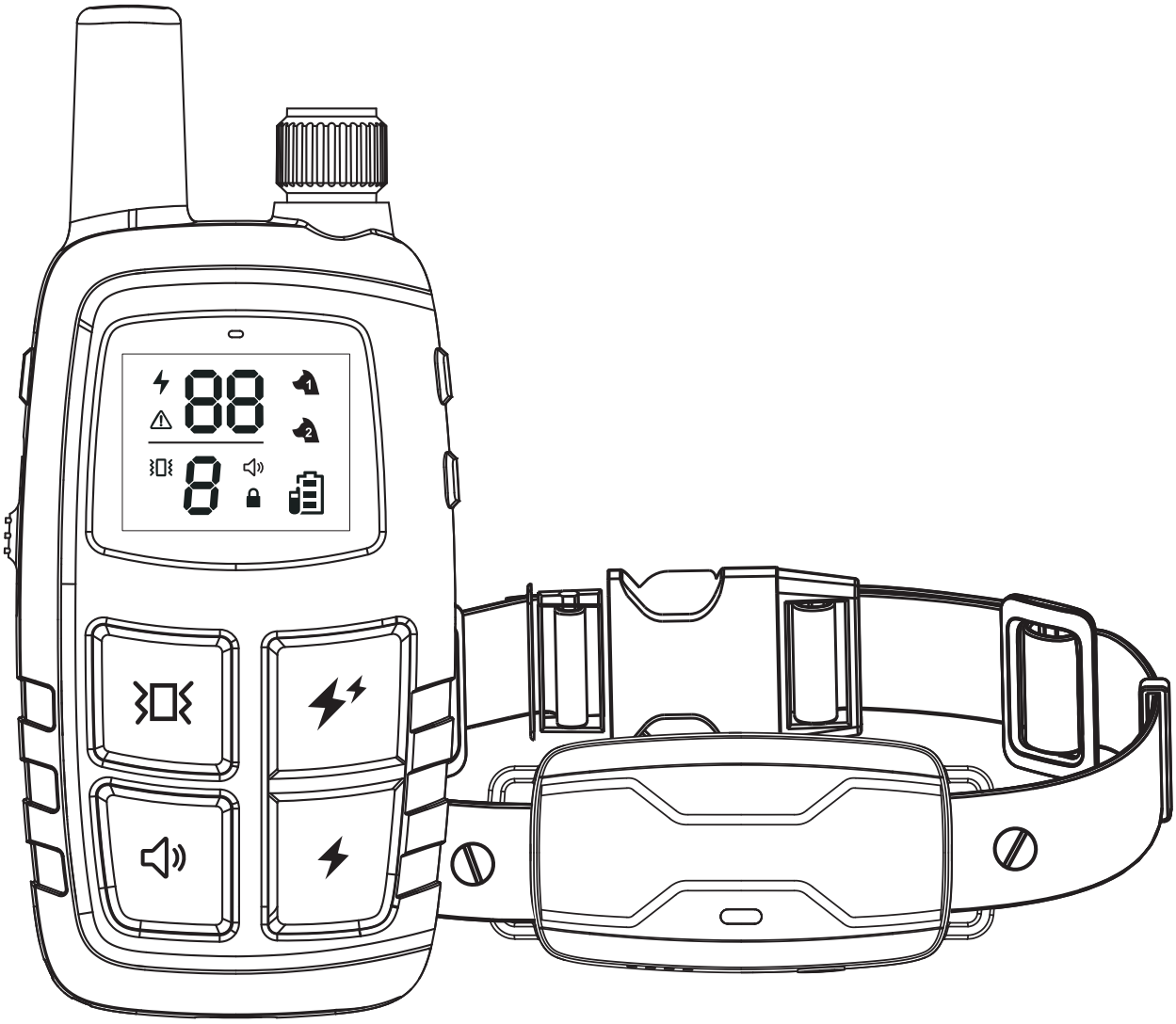

User Manual

*Please read this manual before use

PACKAGE LIST

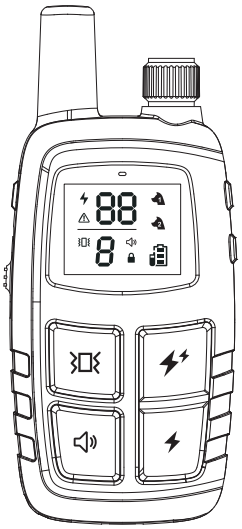

❶ Remote Control

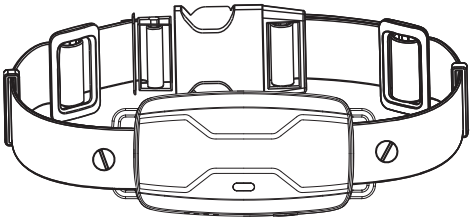

❷ Receiver

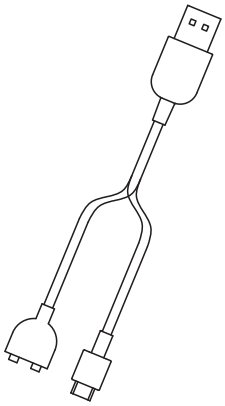

❸ Charging Cable

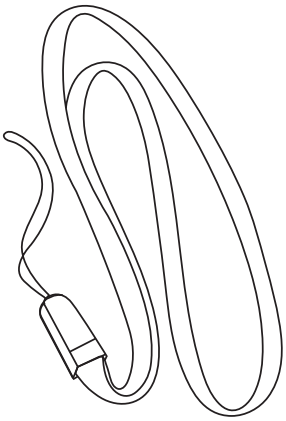

❹ Hand Strap

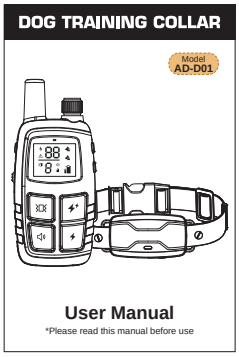

❺ User Manual

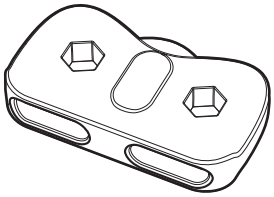

❻ Test Light Tool

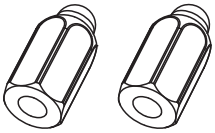

❼ Long Contact Point

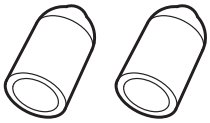

❽ Conductive Silicone Cap

Product Description

Remote Control

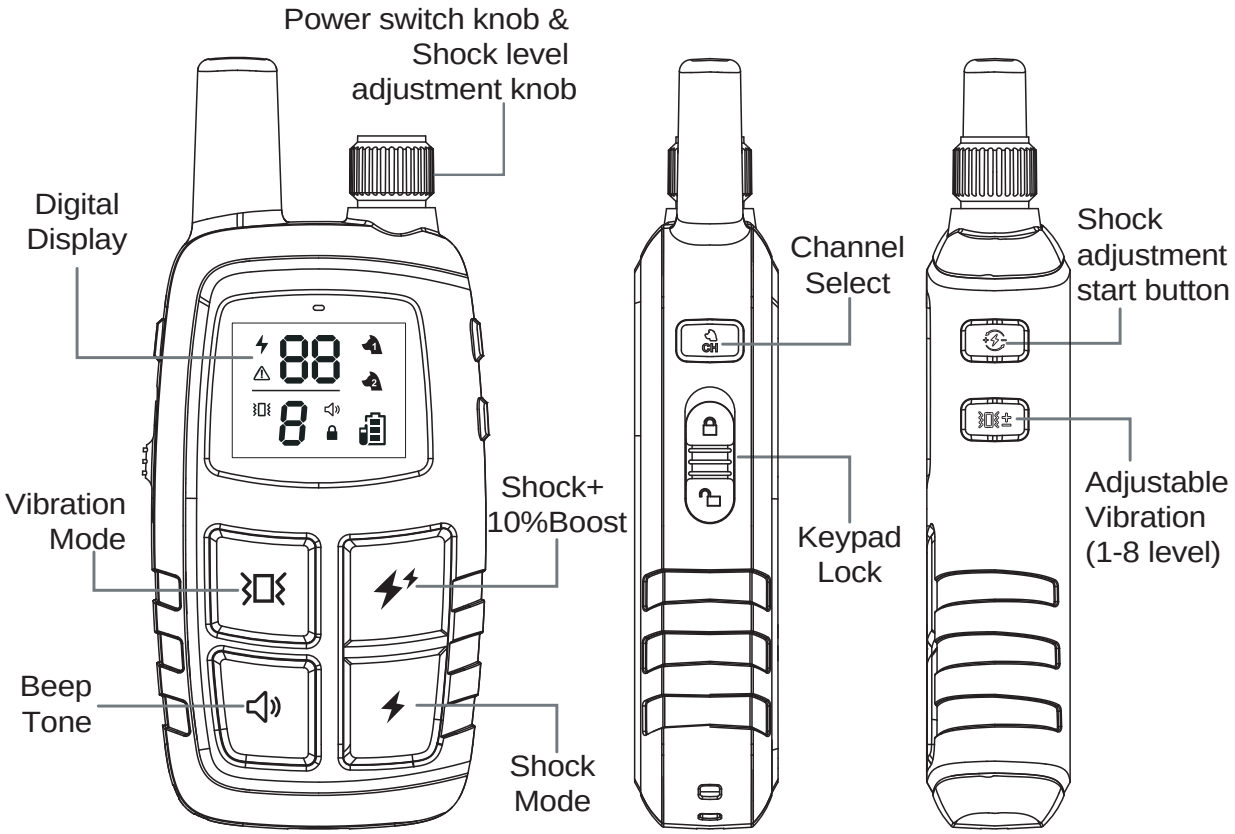

Screen Content

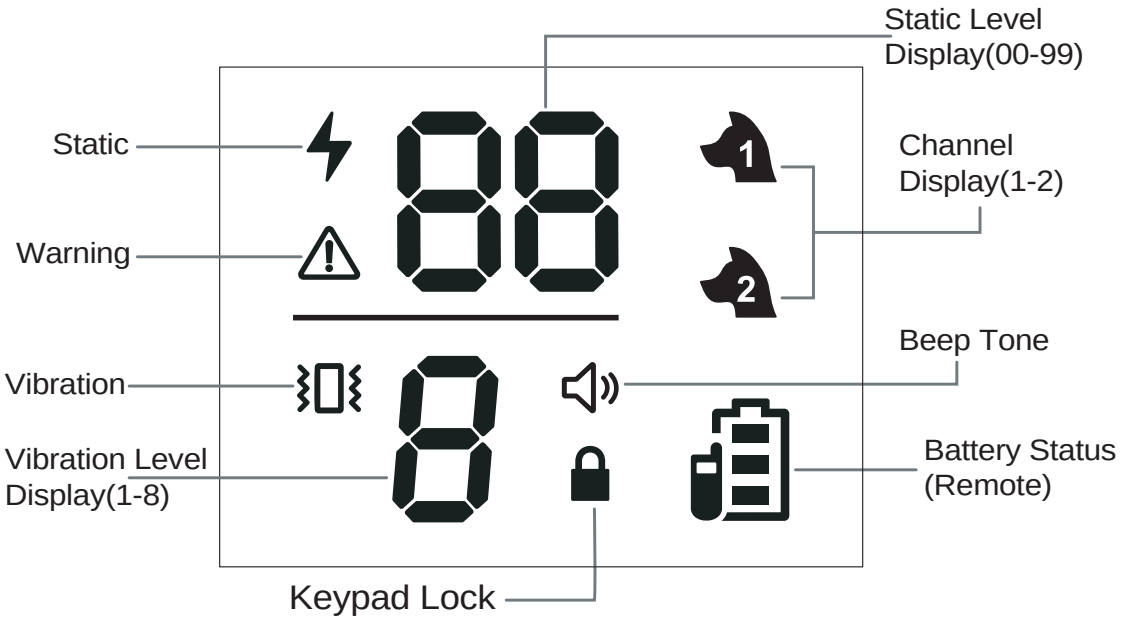

Product Description

Receiver

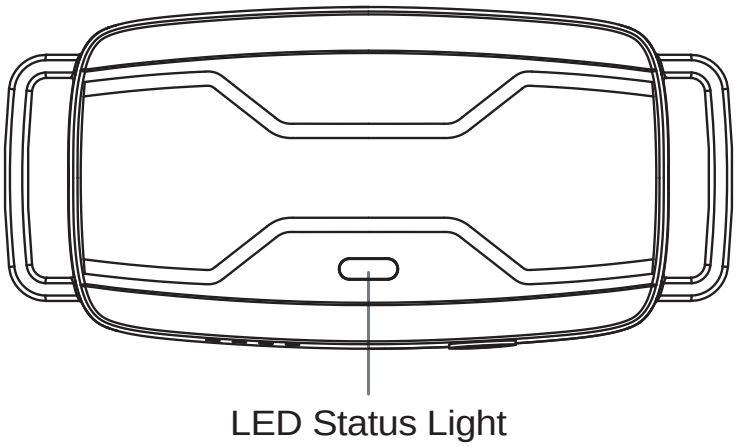

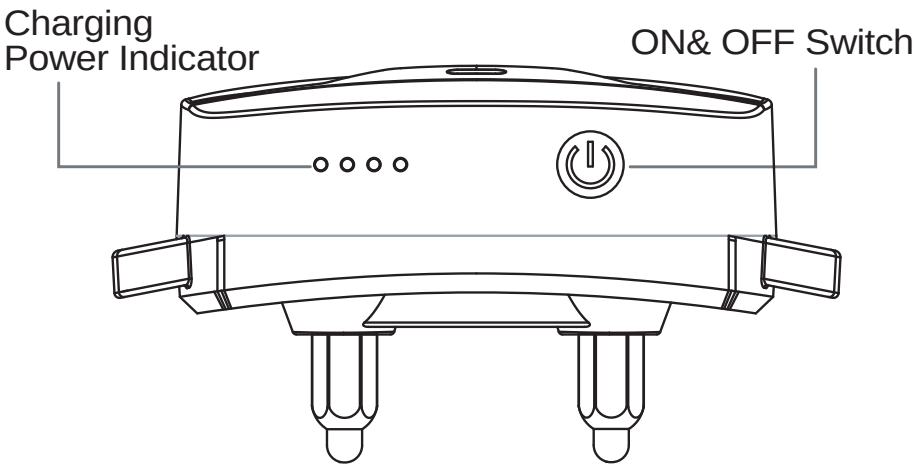

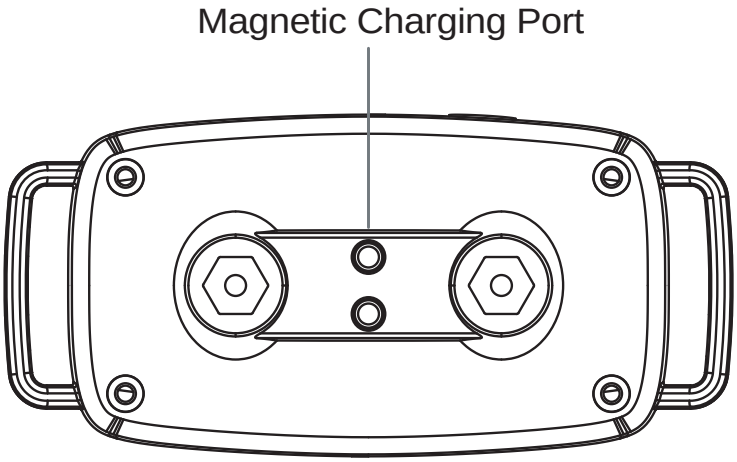

Important Safety Information

⚠ WARNING

Not for aggressive dogs. Do not use this product if your dog is aggressive, or if your dog is prone to aggressive behavior. Aggressive dogs can cause severe injury and even death to their owner and others. If you are unsure whether this product is appropriate for your dog, please consult your v eterinarian or a certified trainer.

⚠ CAUTION

Please read the user's manual carefully before using it to avoid injury caused by improper use. The proper fit of the collar is important. A collar worn for too long or made too tight on the pet's neck may cause skin damage. Ranging from redness to pressure ulcers, which are commonly known as bed sores.

- Avoid leaving the receiver on the dog for more than 12 hours per day.
- When possible Reposition the receiver on your dog's neck every 1-2h.
- Check the fit to prevent excessive pressure; follow the instructions in this manual.
- Never connect a leash to the electronic collar; it will cause excessive pressure on the contacts.
- When using a separate collar for a leash, don't put pressure on the electronic collar.
- Wash the dog's neck area and the contacts of the collar weekly with a damp cloth.
- Check the contact area daily for signs of a rash or a sore.
- If a rash or sore is found, discontinue the use of the collar until the skin has healed.
- Don't use an Adapter with an output greater than 5V1A to charge.
- Avoid contact with other metals while charging, as it may cause a short circuit.

⚠ CAUTION

- Safety during on-leash training. It is vitally important that you and your dog remain safe while learning during on-leash training. Your dog should be on a strong leash, long enough for him to attempt to chase an object, but short enough for him not to reach a road or other unsafe area. You must also be physically strong enough to restrain your dog when he tries to chase.
- This pet training device is not a toy, keep it away from children.

Operating Guide

1 Charging instructions(2h charging time):

When charging is completed, the green light will appear. Charger takes two hours respectively.

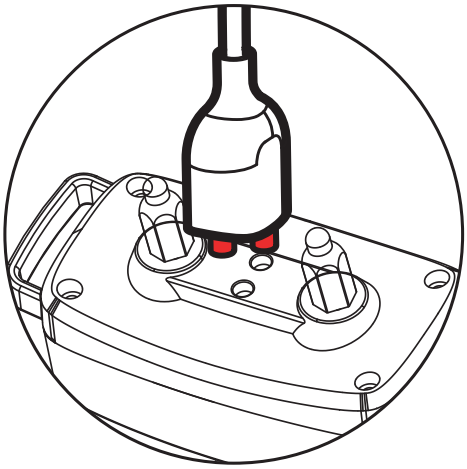

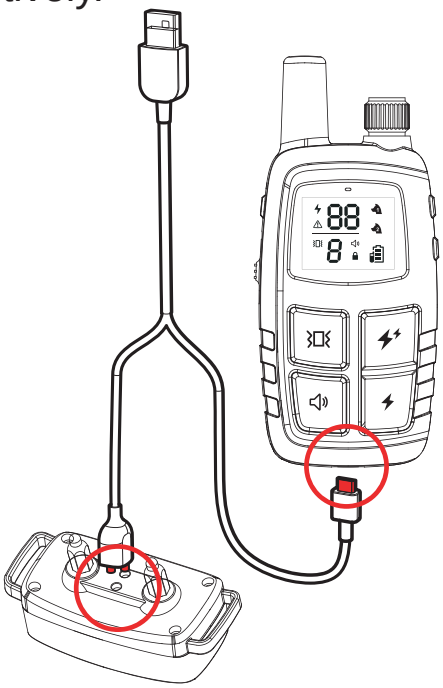

2 Wearing Instructions:

Note: The Contact Points must have direct contact with Dog's skin on the underside of neck. Check the tightness of the Collar by inserting one finger snugly between the collar and neck.

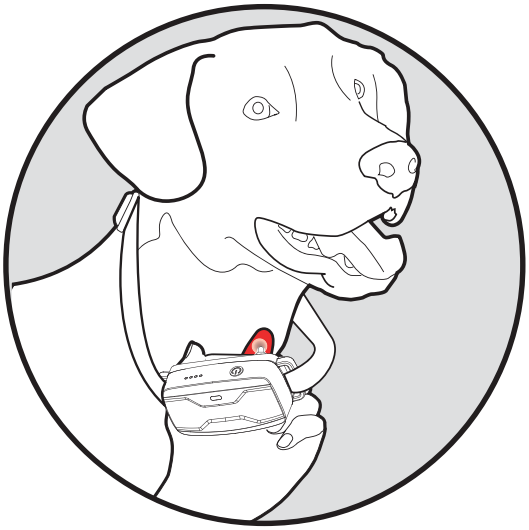

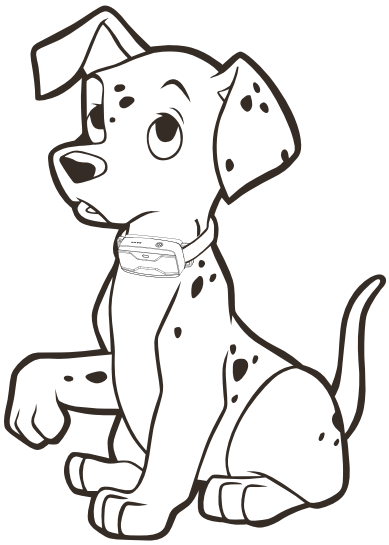

3 Switch description of transmitter and Receiver:

Turn ON the Receiver: Hold the ON button for 1 seconds.
Turn OFF the Receiver: Hold the ON button for 3 seconds.

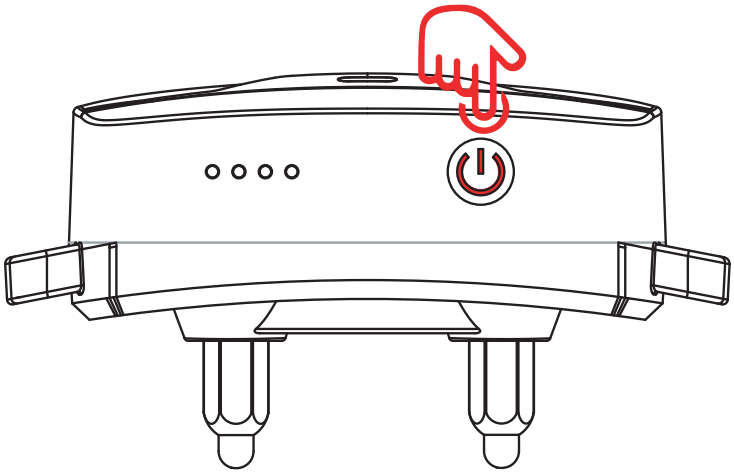

4 Switch lock description:

Security Keypad: Lock or unlock.

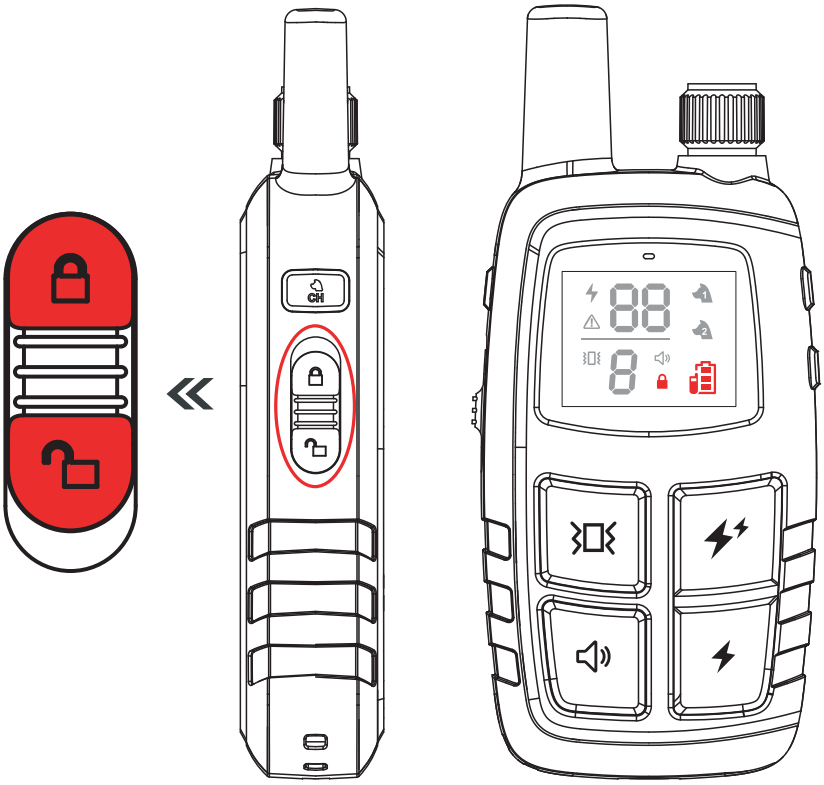

5 Explanation of voice commands:

Beep command: Delivers a beep tone with a non-adjustable volume to the collar.

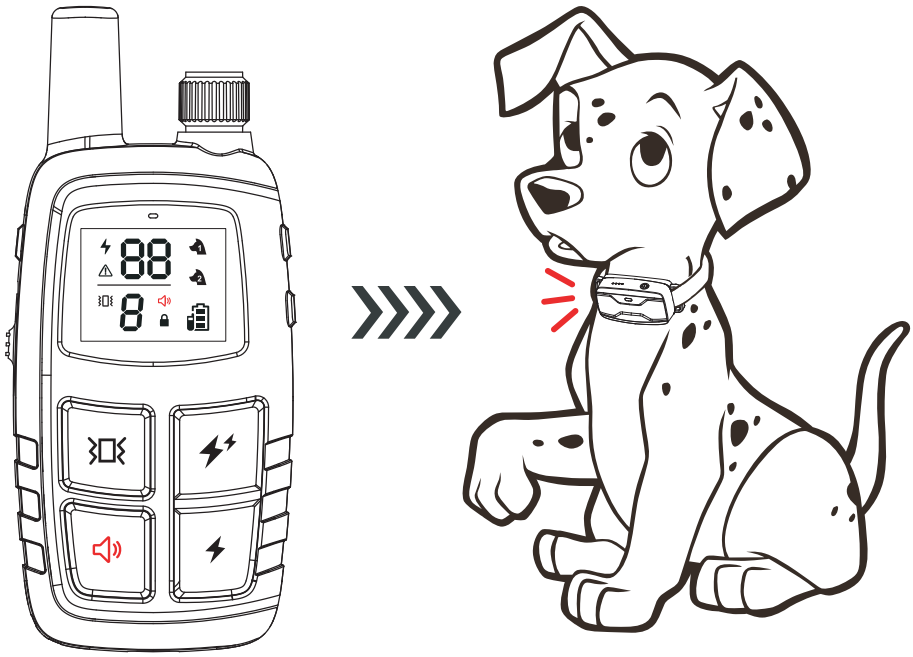

6 Description of the vibration command (How to adjust the level, level description):

Vibration command: Press the vibration key, and the receiver vibrates once.
Intensity adjustment: After pressing the side vibration button, adjust the vibration level (0-8) by the side vibration button.

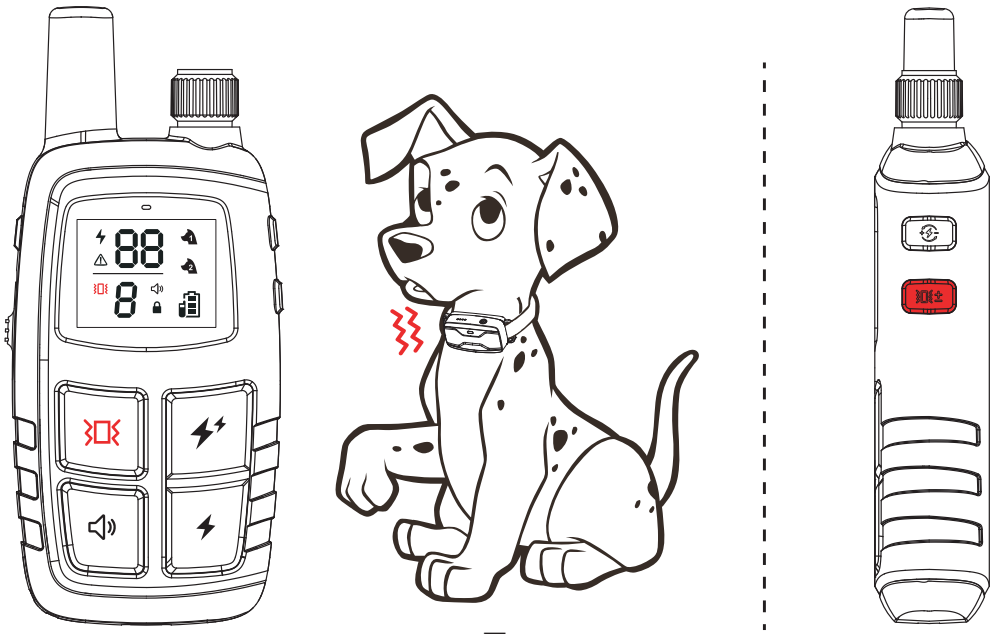

7 Instructions for the electric shock order (How to adjust the level, level instructions):

Static button: Delivers currently selected level Staticstimulation to the collar.
Static + button:That is 10% higherthan the currently selected level.

* Press and hold the shock adjustment start button while turning the shock level adjustment knob.

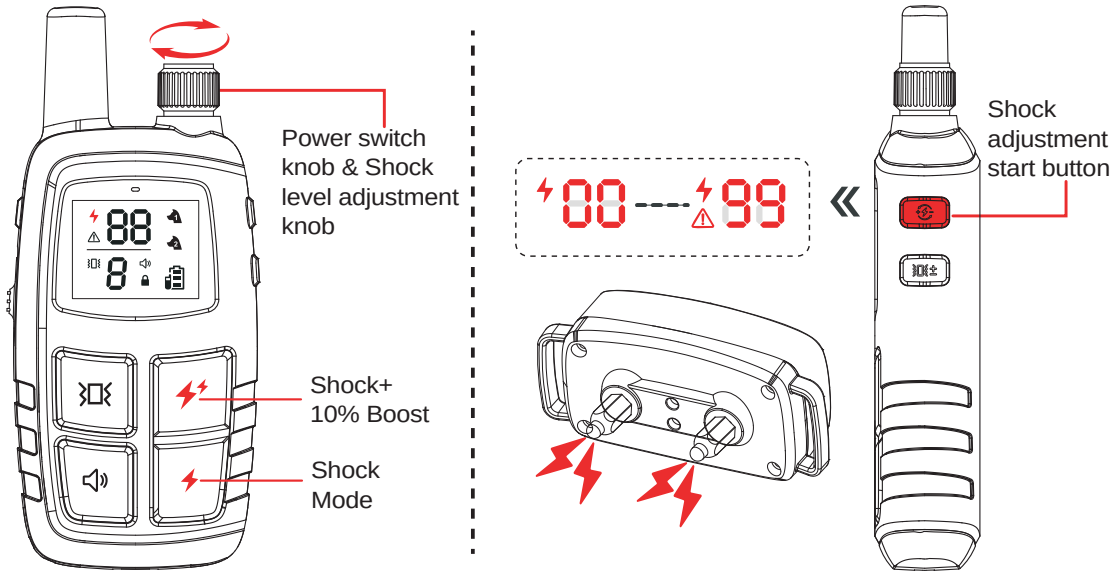

8 Channel switching instructions:

Channel switching: It is possible to train 2 dogs at the same time. Press the channel button to select a different channel.

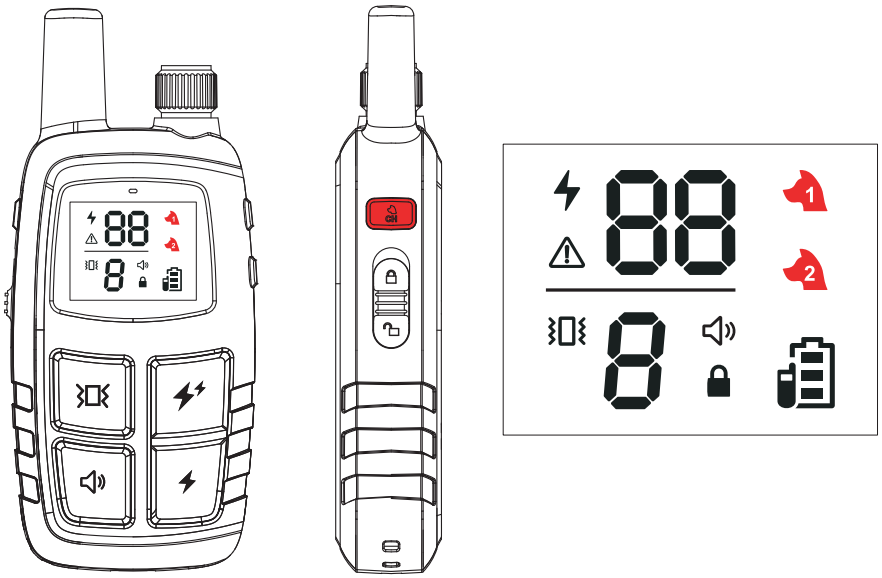

Product Features

3 Training Modes (Beep, Vibration, Shock)

0-8 Speed vibration adjustable and 0-99 shock adjustable

Lightweight design reduces the weight of the dog

Receiver Collar IPX7 Waterproof
Remote IPX4 Waterproof

Remote Range 1600 Ft

2-Hour Rapid Charging Lithium Polymer Battery

Color Eye Protection Screen + Big Digital Display Shows

Support 2 Receiver Collars with One Remote

Magnetic Charging Port

Use of the Test Light Tool

A: Electric shock test

1. Make sure the Remote and Receiver Collar is on.
2. Hold the Test Light tool contacts to the Contact Points.
3. Press a shock button on the Remote Transmitter.

The Test Light will be lighted.

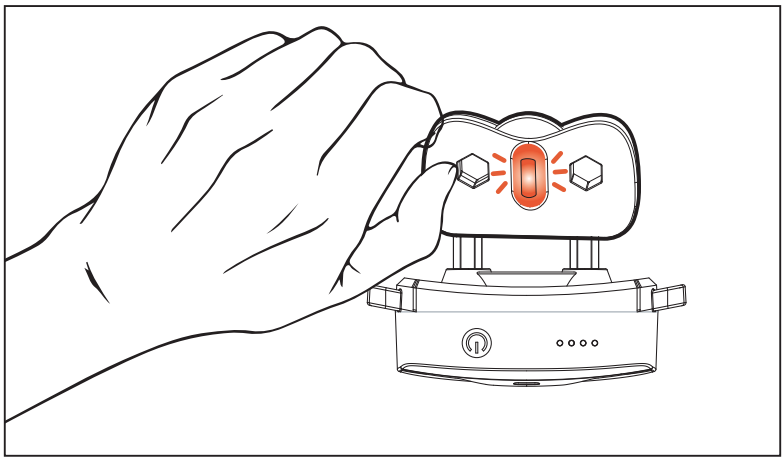

B: As a tool to tighten or loosen the contact points

For dogs with shorter coats, use 2pcs shorter contact points.
For dogs with thicker coats, use 2pcs longer contact points.
Install the conductive Silicone onto the contact point to make it softer. It may be better for your dog's skin.

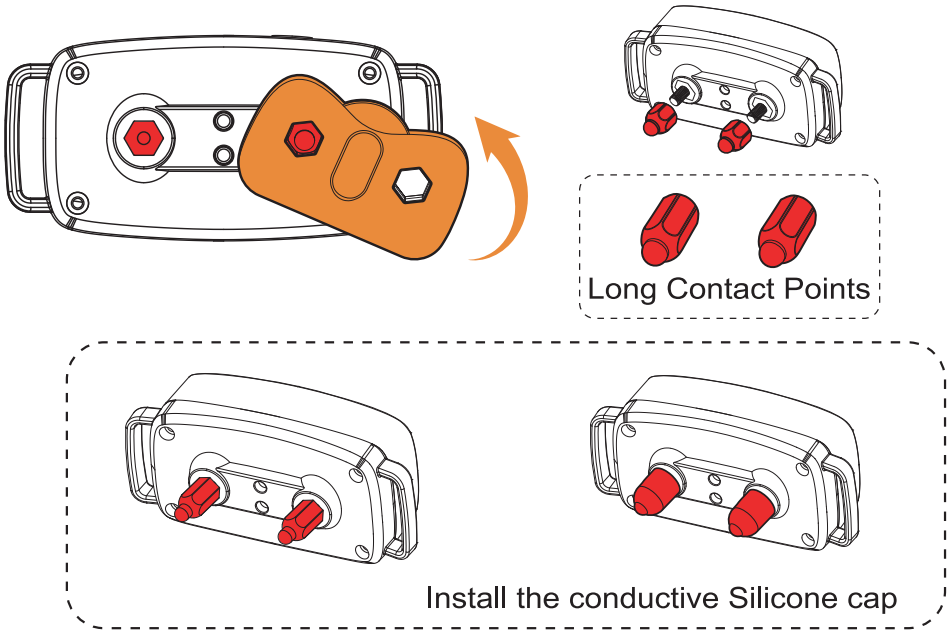

Training Tips

1. Reward your dog with food / treats will usually help to achieve the best training result.
2. Do not use the device on dogs aged below 6-month, old, pregnant, easily frightened, aggressive, in heat, and in inferior health conditions.
3. Use verbal commands first, and supplement with a corrective stimulus only as needed. Be consistent with your verbal commands,use the same words every time. Work with your pet on one behavior at a time to avoid confusion and frustration.
4. Use as little stimulus as possible and only to reinforce verbal commands when necessary. Do not over correct your dog.
5. For example, use the beep sound as warning by pressing the beep button. The dog will become conditioned to the beep preceding the corrective stimulus and will soon learn to recognize the beep as a warning along with your verbal command.
6. Do not rely on this product solely to train your dog. Some dogs will not respond to this product. We cannot guarantee the effectiveness of this or any trainer on your dog. If your dog shows signs of growling, biting or aggression while using the collar, discontinue use immediately and contact a professional trainer for advice.
7. It is recommended to train one dog at a time in a distraction-free environment, both to increase efficiency and to avoid temptation or distraction from other dogs.

Pairing Instructions

(Note: You can skip this step as the device is factory-paired.)

Match the remote to the receiver:

1. Make sure the receiver is turned off.
2. Press and hold the receiver switch for 6 seconds until the green light flashes quickly.
3.Press the channel key to select the channel.
4. Press the remote control pairing button to pair the receiver.
5. Pairing is successful: the receiver will beep and the green light will stop flashes.

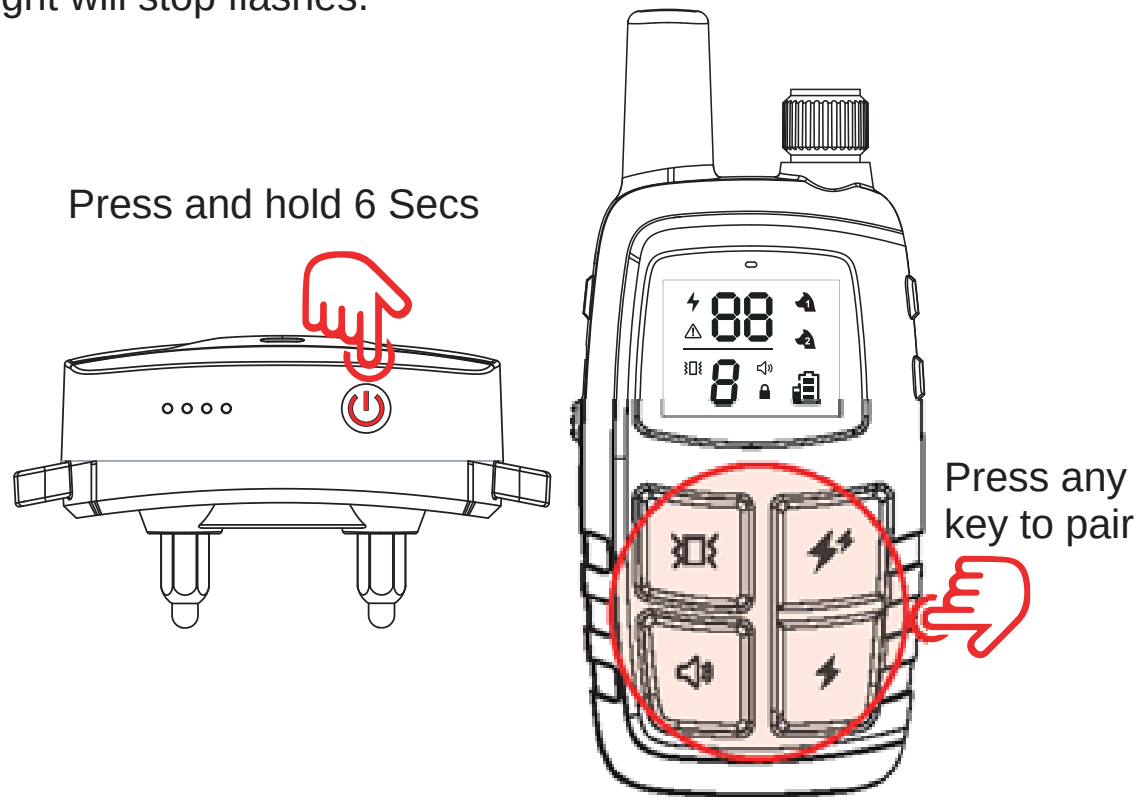

Receiver, skip this step.

The following settings apply to multiple receivers with one remote.

Question & Answer

Can I train my two dogs at the same time?

Answer: Yes, the remote control can match up to two collars for control, so if you want to train more dogs, you need to buy a dditional collars.

My dog has thick long hair, is this suitable for it?

Answer: Yes, our dog training collar is equipped with long and short metal screws, you can replace them according to the actual situation, please make sure the metal screws are in contact with the dog's skin when wearing it, so that the electric shock function can be exerted.

What exactly does the security lock function do?

Answer: Protects dogs from accidental contact whether you keep the remote in your pocket or backpack.

Can the volume of the beep mode be adjusted?

Answer: No, the beep is a fixed volume and cannot be adjusted.

Troubleshooting

1. My pet is not responding when I press a beep vibration or static button.

- Check the Receiver Collar if it is On.
- Check if using the correct channel

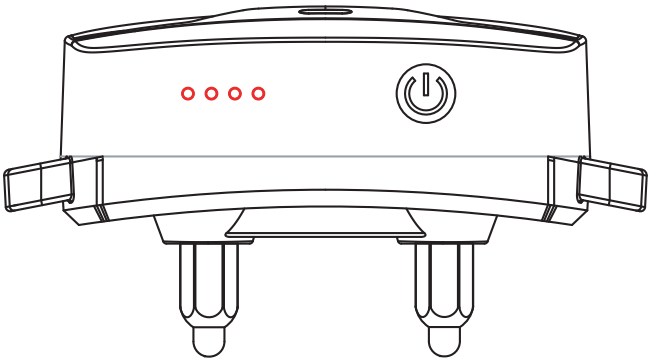

- Please check if the battery is low in either the Remote Transmitter or Receiver Collar.

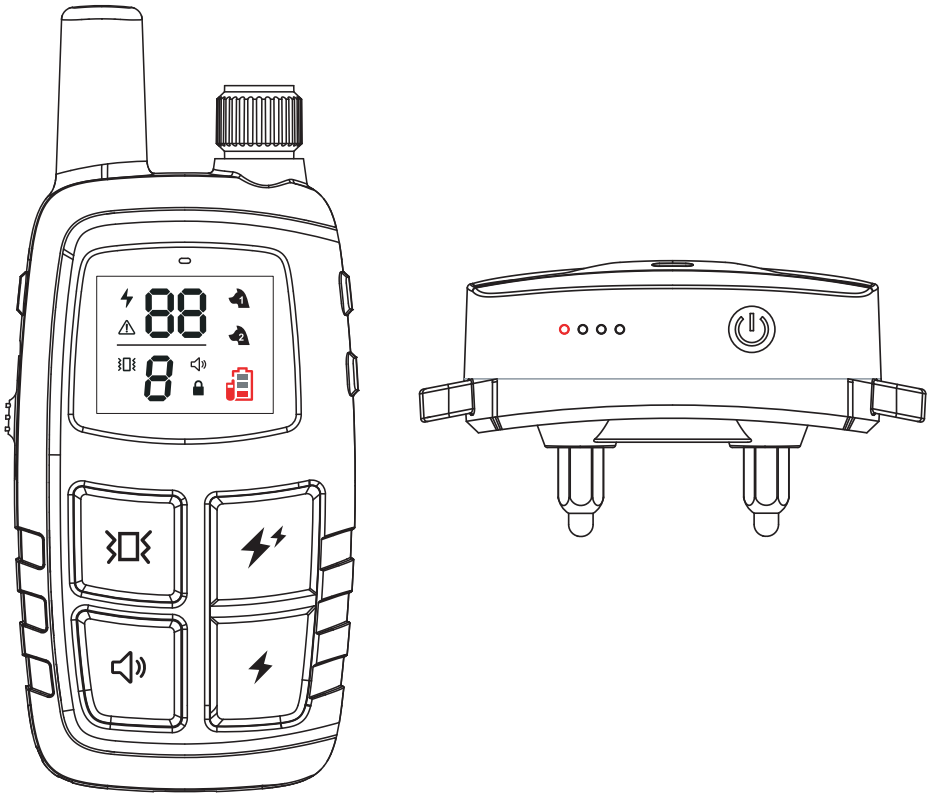

• Test the Receiver with the Test Light to confirm if the shock functions normally.

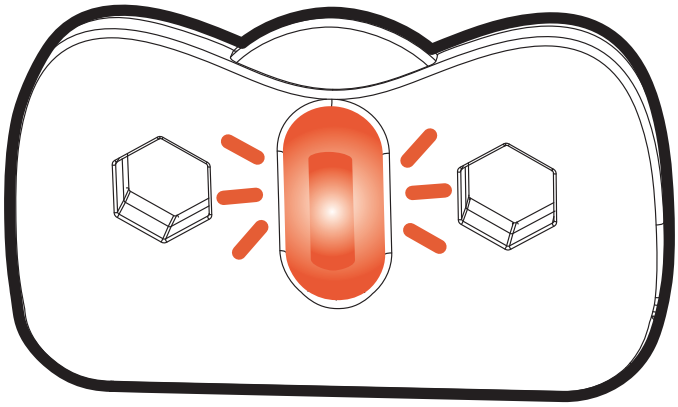

• Increase the correction level. Refer to “Find the Best Stimulation Level For Your dog”.

• Make sure the Receiver Collar’s Contact Points are placed snugly against your pet’s skin.

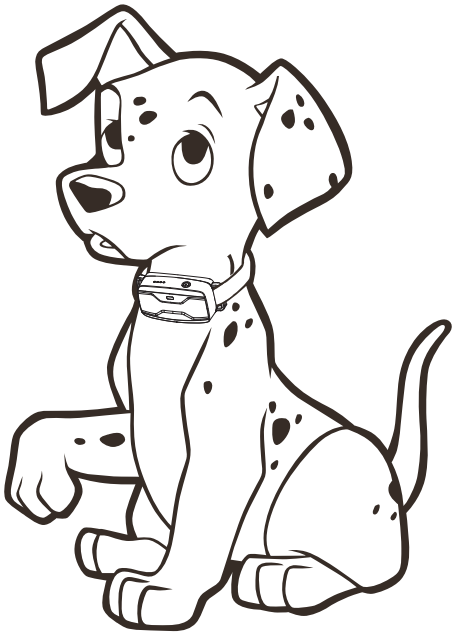

2. Fail to match receiver with remote.

Press and hold the power button for three seconds in the on state. When the red light is on, it is off. In the off state, you must press and hold the power button for 6 seconds. When the green light is flashing, select the channel and press the pairing confirmation key. If not, matching will fail. If the problem persists after attempting as above, please contact us to confirm whether the receiver and the remote are of the same version."

Press and hold 6 Secs

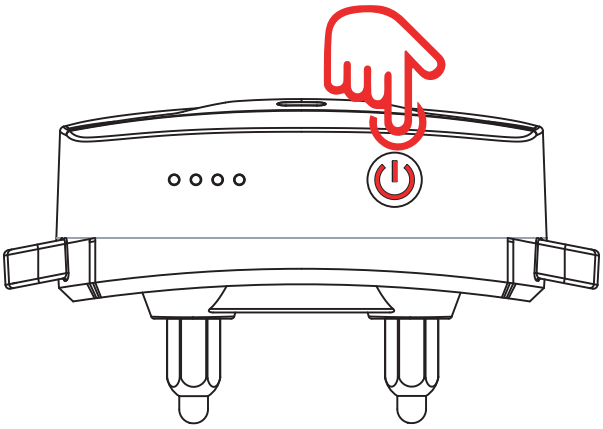

3. Remote/receiver does not response.

• Verify if the Receiver Collar is on.

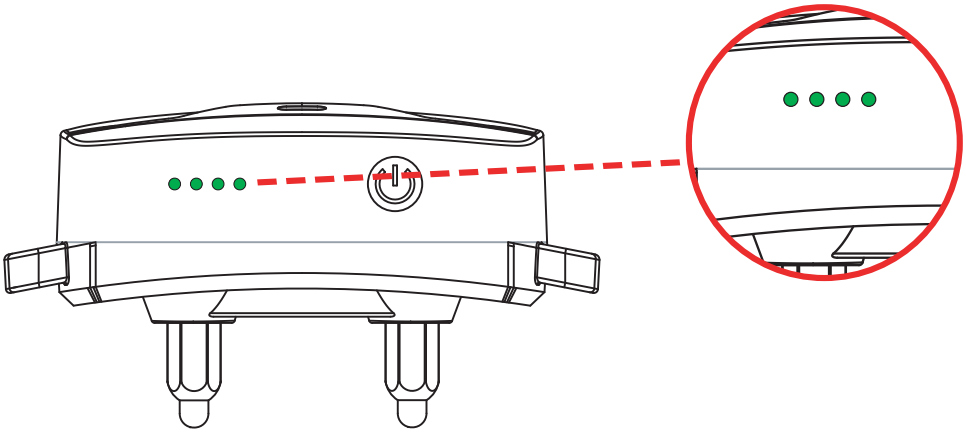

• Verify if the battery of the Transmitter is fully charged.

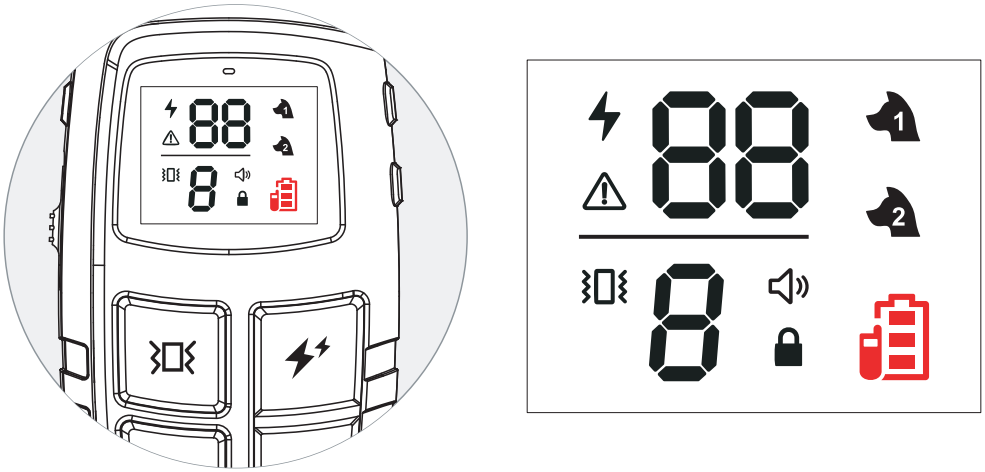

• Verify if the training collar has been paired.

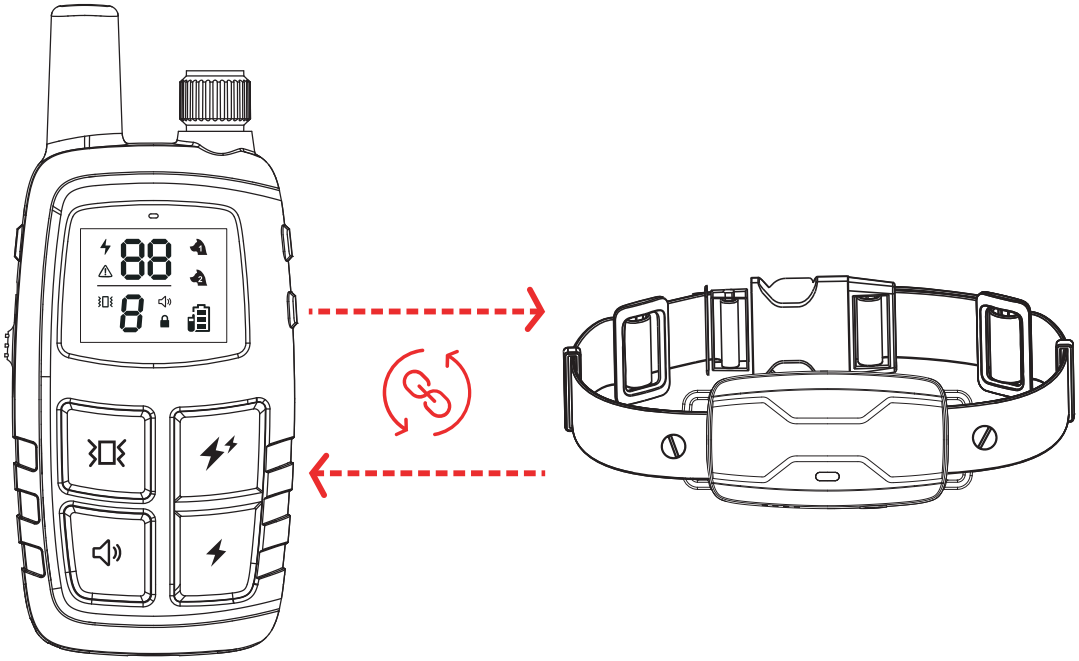

Operating Environment & Maintenance

Do not use the product in the circumstances as follow:

1. Do not operate the devices under temperatures of 104°F and above, doing so at such high temperatures will decrease the performance of the batteries.
2. Do not use the set in places with strong electromagnetic interference. This will greatly compromise the performance of the product.
3. Avoid dropping the devices on a hard surface or inflicting excessive force on them.
4. Avoid using the devices in an environment flooded with corrosive chemicals, this may lead to color degrading, deforming, or cracking of the exterior of the devices.

Maintenance:

1. When not in use, please wipe clean both the Remote and Receiver with mild detergent. Turn off the Remote, lock the keypad, store the set in a cool dry place.
2. During cleaning, wipe with a soft cloth and mild detergent. Do not use hard brushes which may scratch the surface of the device.
3. If the Receiver has gotten dirty, wipe it clean with a damp cloth.

Note: Do not submerge the Receiver into the water for a long period of time.

4. Before charging the receiver, if there is water stain on the charging port, please dry it before charging.
5. If the Remote falls into the water, pick it up quickly and turn off the power. Dry it with the cloth as much as you can and let it out to dry. It should resume function normally once the moisture is dried out.

Regarding you and the product

1. It is strictly forbidden to immerse the receiver in water for a long time, the receiver is IP67 (place it in 1 meter of water, and soak for 30 minutes, the product can be used normally and will not be affected).
2. Please use the remote control and the receiver from the complete set. Do not use other products to match with the receiver.
3. If you want to test the product, please use professional testing apparatus. Do not test with hands, so as to avoid accidental injury.
4. If find water at the magnetic charging port, please wipe it dry before charging.
5. Beware of interference from the environment, it can cause the product not to work properly. For example, places with high voltage facilities, communication towers, thunderstorms, large buildings, and strong electromagnetic interference.
6. Receiver will be turned off if idling for 8 hours.
7. The included collar is a basic accessory and is not necessarily suitable for all types of dog breeds. Any collar not wider than 24mm and not thicker than 5mm, made of soft material, can be a replace ment for the current collar.

Regarding the well-being of your dog

1. The Receiver collar is not a regular collar and is not recommended to put on a leash to walk your dog. (Doing so during pulling may hurt the dog due to protruding electrodes on the Receiver.)
2. Do not put the collar on for over 12 hours, it may cause rashes or discomfort to your dog's skin.
3. Do not allow children, or anyone who has little or no experience with training dogs, to handle this training kit.
4. Static stimulation is not a pleasant experience for any dog. Punishment is a harsh way to train a dog. Always, the praise could encourage your dog to good behavior.

Terms of Use & Limitation of Liability

1. Use of this product means you accept all the terms and conditions.
2. This product is a professional dog training device. You are not recommended using this product if your dog is clever and less than 10 Ibs in weight. If you're not sure whether the product is suitable for your pet dog, please consult a professional handler or contact us.
3. This product is a professional dog training device and should not be used for other purposes. Please do not violate local laws by using this product.
4. We bear no liability for any direct or indirect losses caused by use or misuse of this product; all risks in using this product shall be borne by the user.
5. Please contact the dealer for parts warranty, goods return, or exchange. We provide only technical support.
6. We reserve the right to alter the terms, conditions, and notices of this product offered.

Reference Weight for Dogs

Large Dog（Body height above 24 inches, Weight above 88 Ibs）

Medium Dog（Height 16-24 inches, Weight 24.2-66 Ibs）

Small Dog（Height 10-16 inches, Weight 8.8-22 Ibs）

Mini Dog（Height under 10 inches, Weight under 8.8 Ibs）

FCC Statement

This device complies with part 15 of the FCC Rules. Operation is subject to the following two conditions:

(1) This device may not cause harmful interference.
(2) This device must accept any interference received, including interference that may cause undesired operation.
Warning: Changes or modifications not expressly approved, by the party responsible for compliance could void the user's authority to operate the equipment.

NOTE: This equipment has been tested and found to comply with the limits for a Class B digital device, pursuant to part 15 of the FCC Rules. These limits are designed to provide reasonable protection against harmful interference in a residential installation. This equipment generates, uses, and can radiate radio frequency energy and, if not installed and used in accordance with the instructions, may cause harmful interference to radio communications. However, there is no guarantee that interference will not occur in a specific installation. If interference does occur to radio or television reception, which can be determined by turning the equipment off and on, the user is encouraged to try to correct the interference by one or more of the following measures:

• Increase the separation between the equipment and the receiver.
• Connect the equipment to an outlet on a circuit different from that to which the receiver is connected.
• Consult customer care, the dealer, or an experienced radio/TV technician for help.
• Reorient or relocate the receiving antenna.

Product Specification

Model	AD-D01
Receiver’s Casing	IPX7
Remote’s Casing	IPX4
Remote/ Receiver’s Battery	300mAh
Remote/Receiver Charging Time	Full Charger 2hr
Remote/Receiver Standby Time	Remote 45 days Receiver 35 days
Remote to Receiver’s Signal Range Distance	1600FT
Max supported Quantity	2 Receivers

Reference Size for Different Dogs

Size	Neck(in)	Chest Measurement(in)	Back Length(in)
Mini	7.8-8.6	9.8-11.8	7.5
Small	7.8-9.5	11.4-14.2	9
Medium	9-11	13.7-16.5	11
Large	10.6-12.2	16.2-18.5	12.2
Large	11.8-13.4	18.1-20.8	13.8
Large	13-14.5	20.5-23.2	15.7
Huge	17-18.9	30-33	23.6
	18.5-20.5	34.6-38.2	25.6
	21.6-24.4	36.2-39.3	27.5

Warranty and repair information

1-Year Warranty

The warranty begins from the date of purchase. For the first year, coverage is for both Parts and Labor on warranty repair services, but the return postage is for the buyer's account.
Accessories such as chargers, straps, and batteries are covered for the first year only. When the warranty expires, customers will need parts and repairs at their own expense.

Won't Qualify for 1-Year Warranty

• We do not offer a warranty for products that have been bought secondhand or as resold products.
• Manual damage or loss is not covered by the warranty.
• Any water damage on the Water Resistant Transmitters and the Water Resistant Receivers of our product series will not be covered.
• The warranty is void if the unit has been altered or an unauthorized person who attempts to repair work has damaged the unit.
• Replacement of batteries is not recommended during the warranty period. If the customer chooses to replace the batteries, any damage to the unit during the change-out by the owner will make the warranty void.