Intellian

C200M

Intellian Certus Terminal

Installation & Operation User Guide

Serial number of the product

This serial number will be required for all troubleshooting or service inquiries.

© 2023 Intellian Technologies, Inc. All rights reserved. Intellian and the Intellian logo are trademarks of Intellian Technologies, Inc., registered in the U.S. and other countries. The C200M is a trademark of Intellian Technologies, Inc. Intellian may have patents, patent applications, trademarks, copyrights, or other intellectual property rights covering subject matter in this document. Except as expressly provided in any written license agreement from Intellian, the furnishing of this document does not give you any license to these patents, trademarks, copyrights, or other intellectual property. All other logos, trademarks, and registered trademarks are the property of their respective owners. Information in this document is subject to change without notice. Every effort has been made to ensure that the information in this manual is accurate. Intellian is not responsible for printing or clerical errors.

Disclaimer

The information in this user manual is subject to change without prior notice through a product life cycle. A printed version of the user manual is periodically updated and may contain inaccuracies or omissions compared to the recent product information. The most up-to-date information is available on our website at intelliantech.com.

Doc. No. UG-KC2002-V1.0

Table of Contents

Chapter 1. Precautions 8
1.1 Warnings, Cautions, and Notes 8
1.2 General Precautions 8

Chapter 2. Certifications 10

Chapter 3. Introduction 11
3.1 Introduction of C200M 11
3.2 Features of C200M 11
3.3 Iridium Satellite Network 12

Chapter 4. Planning Installation 13
4.1 Selecting Installation Site 13
4.1.1 Avoiding RF Interference 13
4.1.2 RF Hazard Precautions 14
4.2 System Package 15
4.2.1 Above Deck Unit (ADU) 15
4.2.2 Below Deck Unit (BDU) 15
4.2.3 Packing List 16
4.3 System Cables 18
4.3.1 Antenna RF Cable (Connecting ADU - BDU) 18
4.4 Unpacking System Package 19

Chapter 5. Installing ADU 21
5.1 Antenna Dimensions 21
5.2 ADU Mounting Hole Pattern 22
5.3 Mast Designing (Installation Example) 23
5.4 Mounting Antenna 25
5.4.1 Mounting Antenna using C200M Outer Common Holes (with M6 Bolts) 25
5.4.2 Mounting Antennas using Holes matching Iridium Pilot (with M10 Bolts) 25
5.4.3 Mounting Antenna on Pole (Optional) 26
5.5 Vent Hole 27
5.6 Connecting Antenna RF Cable 28

Chapter 6. Installing BDU 30
6.1 Selecting BDU Installation Site 30
6.2 BDU Dimensions 30
6.3 BDU Mounting Template 32
6.4 Mounting BDU 33
6.4.1 Direct Mounting Type 33
6.4.2 19" Rack Mounting Type (Optional) 33
6.5 Antenna System Configuration 35
6.5.1 Data Sessions and Voice Calls 35

6.6 BDU Cable Connection 36
6.6.1 BDU Back Panel View 36
6.6.2 BDU Connector Pinout Guide 36
6.6.3 Connecting DC Power to BDU 40
6.6.4 Connecting BDU to ADU (Antenna) 43
6.6.5 Connecting BDU to Devices using LAN Port (RJ45) 43
6.6.6 Connecting BDU to Device using WAN Port 44
6.6.7 Connecting BDU to POTS Phone (RJ14) 44
6.6.8 Connecting BDU to External Devices 45
6.6.9 Connecting Wi-Fi Antenna to BDU 45
6.6.10 Grounding Stud 45
6.6.11 Inserting SIM Card 46

Chapter 7. Operating BDU 47
7.1 BDU Front Panel 47
7.2 Powering on System 48
7.3 Enabling PoE 48
7.4 Registering Phones to Make / Receive Calls 49
7.4.1 Checking Active Voice Lines 49
7.4.2 Registering Phones with Extension Number 49
7.4.3 Making Local Phone Call 50
7.4.4 Making Phone Call 50
7.4.5 Receiving Phone Call 50
7.5 Using Grandstream VoIP Phone Call 51
7.6 Using Wireless Devices through Wi-Fi 54
7.7 Using Mobile Phone Call 55
7.7.1 Installing Mobile Application 55
7.7.2 Registering New Extension for Voice Service (Optional) 55
7.7.3 Setting Mobile Phone 56
7.8 How to Access Terminal Remotely 57

Chapter 8. Using AptusLX 59
8.1 Introduction 59
8.2 Accessing Internal Webpage of BDU 59
8.3 Login 60
8.4 Top Menus 61
8.5 Account Menu 62
8.5.1 User 62
8.5.2 Logout 63
8.6 Dashboard 64
8.6.1 How to Add & Remove Panels (Dashboard Setting) 65
8.7 Status 66
8.7.1 Network 66
8.7.2 Wi-Fi 67
8.7.3 Phone/PABX 68
8.7.4 Data 69
8.7.5 Certus 70
8.7.6 SIM 71

8.7.7 Terminal info 72
8.7.8 External GPIO 73
8.7.9 SDF 74
8.8 Setup 75
8.8.1 Network 75
8.8.2 Wi-Fi 76
8.8.3 Firewall 78
8.8.4 Phone/PABX 81
8.8.5 Data 82
8.8.6 Data Limit 84
8.8.7 SDF 85
8.8.8 External GPIO 86
8.8.9 Location Service 87
8.9 Tools 88
8.9.1 Software Upgrade 88
8.9.2 Backup & Restore 90
8.9.3 Reset 91
8.9.4 Logs 92
8.9.5 Diagnostic 93
8.9.6 Support 94

Chapter 9. Specification 95
9.1 Antenna Specification 95
9.2 RF Specification 95
9.3 Below Decks Unit Specification 96
9.4 Packing Specification 96
9.5 Environmental Specification 97

Chapter 10. Warranty Policy 98

Chapter 11. Appendix 99
11.1 Tightening Torque Specification 99
11.2 Pole Mount Kit 100

List of Figures

Chapter 3. Introduction 11

Figure 1: Earth Showing Iridium Satellites in Six Defined Orbital Planes 12

Chapter 4. Planning Installation 13

Figure 2: Potential RF Interference 13
Figure 3: RF Hazard Precautions 14
Figure 4: Above Deck Unit (ADU) / Antenna Unit 15
Figure 5: Below Deck Unit (BDU) 15
Figure 6: Unpacking System Package (with ADU & BDU Sub-package) 19
Figure 7: Unpacking BDU Package 19
Figure 8: Unpacking ADU Package 20

Chapter 5. Installing ADU 21

Figure 9: Antenna Dimensions 21
Figure 10: ADU Mounting Hole Pattern 22
Figure 11: Recommended Mast Design using C200M Outer Common Holes (with M6 Bolts) 23
Figure 12: Recommended Mast Design using Holes matching Iridium Pilot (with M10 Bolts) 24
Figure 13: Mounting Antenna using C200M Outer Common Holes (with M6 Bolts) 25
Figure 14: Mounting Antennas using Holes matching Iridium Pilot (with M10 Bolts) 25
Figure 15: Installing 40A Pole Bushing inside Pole Tube 26
Figure 16: Installing Pole Bracket 26
Figure 17: Mounting Antenna on Pole Mounted Bracket 27
Figure 18: Vent Hole 27
Figure 19: Connecting Antenna RF Cable 28
Figure 20: Routing RF Cable 29

Chapter 6. Installing BDU 30

Figure 21: BDU Dimensions (Direct Mounting Type) 30
Figure 22: BDU dimensions (installed using 19-inch BDU Rack Mount Kit) 31
Figure 23: BDU Mounting Template 32
Figure 24: Direct Mounting of BDU 33
Figure 25: Attach Cable Tray to BDU 33
Figure 26: Attach Rackmount Plate to BDU 34
Figure 27: Mount BDU Assembly into 19" Rack 34
Figure 28: C200M System with Connected Devices 35
Figure 29: BDU Back Panel View 36
Figure 30: DC Power Connector Pinout 36
Figure 31: Antenna Connector (TNC) Pinout 37
Figure 32: LAN Connector (RJ45) Pinout 37
Figure 33: POTS Phone Connector (RJ14 & 6P4C) Pinout 37
Figure 34: GPIO Connector Pinout 38
Figure 35: DC Power to BDU Connection 40
Figure 36: BDU to Antenna Cable Connection 43
Figure 37: BDU to Devices Cable Connection using LAN Port (RJ45) 43

Figure 38: BDU to Device Cable Connection using WAN Port 44
Figure 39: BDU to POTS Phone (RJ14) Cable Connection 44
Figure 40: Using Cable Splitter with POTS Phones (RJ14) 44
Figure 41: BDU to External Devices Connection 45
Figure 42: Wi-Fi Antenna to BDU Connection 45
Figure 43: Grounding Stud Connection 45

Chapter 7. Operating BDU 47

Figure 44: BDU Front Panel 47

Chapter 11. Appendix 99

Figure 45: Mounting Bracket 100
Figure 46: Pole mount-Sleeve 100
Figure 47: Mounting Hub 101

Chapter 1. Precautions

1.1 Warnings, Cautions, and Notes

WARNING, CAUTION, and NOTE statements are used throughout this manual to emphasize important and critical information. You must read these statements to help ensure safety and to prevent product damage. The statements are defined below.

	WARNING WARNING indicates a potentially hazardous situation that if not avoided, could result in death or serious injury.
	CAUTION CAUTION indicates a potentially hazardous situation that if not avoided, could result in minor or moderate injury or damage to equipment. It may also be used to alert users about unsafe practices.
	NOTE A NOTE statement is used to notify people of installation, operation, programming, or maintenance information that is important, but not hazard-related.

1.2 General Precautions

Before you use the antenna, make sure that you have read and understood all safety requirements.

	THIS WAY UP • Place the boxes/crates on the floor with the arrow pointing up.
	FRAGILE • Since the Radome is fragile, handle it with care. Do not apply excessive pressure or shock. These may cause surface cracking or other damage.
	DO NOT STACK MORE THAN FOUR UNITS • Do not stack boxes/crates more than four units as there is a risk boxes/crates may fall and be damaged.
	KEEP DRY • Always make sure the antenna is stored on a dry surface in a dry, well-ventilated area. • The antenna is designed to withstand a normal rain shower; however, water resistance cannot be guaranteed if the antenna is submerged.

* **DO NOT SHIP VIA RAIL**: Ensure not to ship any system via rail.
* **Shock Hazard:** To minimize shock hazard and to protect against lightning, you must connect the equipment chassis and cabinet to an electrical ground. Make sure the system is correctly grounded and power is off when installing, configuring, and connecting components.
* **Do not operate in an explosive atmosphere:** Do not operate the equipment in explosive environments or in the presence of flammable gases. Operating this equipment in such an environment causes a definite safety hazard.
* **Keep away from living circuits:** Operating personnel must at all times observe all safety regulations. Do not replace components or make adjustment inside the equipment with any power supply turned on. Under certain conditions, dangerous potentials may exist in the power supplies even with the power cable removed. To avoid injuries, always remove the power and discharge a circuit before touching it.

Chapter 2. Certifications

This device complies with part 15 of the FCC Rules and with Industry Canada licence-exempt RSS standard(s).

Operation is subject to the following two conditions:

(1) This device may not cause harmful interference, and

(2) this device must accept any interference received, including interference that may cause undesired operation.

L'émetteur/récepteur exempt de licence contenu dans le présent appareil est conforme aux CNR d'Innovation, Sciences et Développement économique Canada applicables aux appareils radio exempts de licence. L'exploitation est autorisée aux deux conditions suivantes :

(1) L'appareil ne doit pas produire de brouillage;

(2) L'appareil doit accepter tout brouillage radioélectrique subi, même si le brouillage est susceptible d'en compromettre le fonctionnement.

Changes or modifications made to this equipment not expressly approved by Intellian Technologies, Inc. may void the FCC authorization to operate this equipment.

Radiofrequency radiation exposure Information:

This equipment complies with RED and FCC, IC radiation exposure limits set forth for an uncontrolled environment. This equipment should be installed and operated with minimum distance of 1.5 m between the radiator and your body.

This transmitter must not be co-located or operating in conjunction with any other antenna or transmitter.

Note: This equipment has been tested and found to comply with the limits for a Class B digital device, pursuant to part 15 of the FCC Rules. These limits are designed to provide reasonable protection against harmful interference in a residential installation. This equipment generates, uses and can radiate radio frequency energy and, if not installed and used in accordance with the instructions, may cause harmful interference to radio communications. However, there is no guarantee that interference will not occur in a particular installation. If this equipment does cause harmful interference to radio or television reception, which can be determined by turning the equipment off and on, the user is encouraged to try to correct the interference by one or more of the following measures:

- Reorient or relocate the receiving antenna.
- Increase the separation between the equipment and receiver.
- Connect the equipment into an outlet on a circuit different from that to which the receiver is connected.
- Consult the dealer or an experienced radio/TV technician for help.

Chapter 3. Introduction

3.1 Introduction of C200M

This document describes the overall system design and architecture of the Intellian L-band C200M terminal. Intellian's C200 Maritime is an L-band terminal designed for use with Iridium Certus® service. The C200M terminal uses an omnidirectional quadrifilar helical antenna to communicate with Iridium's Low Earth Orbit (LEO) satellites. Iridium's constellation of 66 active LEO satellites provides truly global coverage. The Iridium Certus 200 service provides three high quality voice lines with concurrent IP data. The maximum data speed of the terminal is 176 kbps for downlink and 176 kbps for uplink.

3.2 Features of C200M

The Intellian C200M terminal is market leading due to its efficient RF and modem integration, compact ADU size and fully featured terminal. It meets our customers demand aims to satisfy customers' demand for a low cost of ownership in terms of deployment, installation, and efficient operation.
The following list the common key feature of the Intellian C200M.

Efficient RF and antenna design

The C200M is designed to meet Iridium L2 class performance. This class supports 176 kbps uplink and downlink using a high performance omni-directional antenna and RF front end. The G/T requirement is >-31 dB/K and the EIRP is 12 dBW which are maintained from zenith to 8° above horizon, made possible with a highly optimized antenna design.

Interference resilient RF design

The RF architecture includes dedicated interference blocking design elements, making the C200M terminal inherently resilient against interference from terrestrial cellular equipment and other sources of radio interference off or on board the vessel

Built in security and networking features

Intellian's AptusLX terminal management software is used on all of Intellian's L-band terminals. It is well regarded in the market due to its user friendliness and powerful feature set. AptusLX includes features that allows the terminal administrator to manage access to the terminal and assign device specific quality of service profiles. AptusLX includes comprehensive usage reporting so it is simple to identify the cause of unexpected data consumption. In addition AptusLX includes firewall, soft PABX for up to 16 SIP phones, and a WAN port to support intelligent dynamic network routing.

Easy and quick installation

Ethernet over Coax technology (MoCA) allows for both power and digital data signals to be transferred between the ADU and BDU through a single coaxial cable. The TNC connectors used on the C200M match common industry practice for this size of terminal, supporting re-use of an existing good condition cable if desired. The ADU includes an alternate mounting bolt pattern that matches the size and arrangement of the Iridium Pilot ADU, making it easy to reuse a pedestal that was originally designed for an Iridium Pilot ADU..

3.3 Iridium Satellite Network

The Iridium satellite network is comprised of 66 low-earth orbiting (LEO), cross-linked satellites, providing voice and data coverage over Earth's entire surface.

At only 476 mile (780 km) from the earth, the proximity of Iridium's LEO network means pole-to-pole coverage, a shorter transmission path, stronger signals, lower latency, and shorter registration time than with GEO satellites. The network is considered a meshed constellation of interconnected, cross-linked satellites so that each satellite "talks" with the other nearby satellites in front, behind, and adjacent orbits.

In space, each Iridium satellite is linked to up to four others creating a dynamic network that routes traffic among satellites to ensure global coverage, even when traditional local systems are unavailable.

Figure 1: Earth Showing Iridium Satellites in Six Defined Orbital Planes

Chapter 4. Planning Installation

The antenna installation requires precaution and safety measures. Failure to follow the correct installation process may lead to injury of the installer and/or cause damage to the system. To maximize the performance of the system, a thorough review of this installation guide is strongly recommended. In addition, you should execute the installation process as it is noted in this manual.

CAUTION

DO NOT OPERATE THE ANTENNA WITHOUT THE RADOME. THIS WILL RESULT IN DAMAGE TO THE ANTENNA AND ABNORMAL OPERATION.

4.1 Selecting Installation Site

The antenna should be placed in an area on-board of the vessel with an unobstructed view extending from (at least) -30° below the horizontal surface in all azimuth direction. When the antenna is transmitting, obstacles in way of the beam path will cause decreased satellite signal strength. The antenna unit should have direct line-of-sight with the desired satellite without any obstacles in the beam path. Minimum distances between the antenna and other onboard devices must also be considered during installation.

Do not place the antenna near to a funnel because smoke deposits can cause corrosion of the antenna. In addition, the deposit can impact performance or cause malfunctions.

Do not place the antenna where there is a direct spray of seawater to minimise risk of water ingress into the antenna.

4.1.1 Avoiding RF Interference

Do not install the antenna near the high power shortwave radar. Most radar transmitters emit RF energy within an elevation range of -15° to +15°. For this reason, you should position the antenna at least 4.6 m (15.09 feet) away from any radars (S-band and X-band Radar up to 50kW).

WARNING

Never place the antenna in the beam path of the radar, regardless of distance. The high power shortwave radar may impair its performance or damage the antenna.

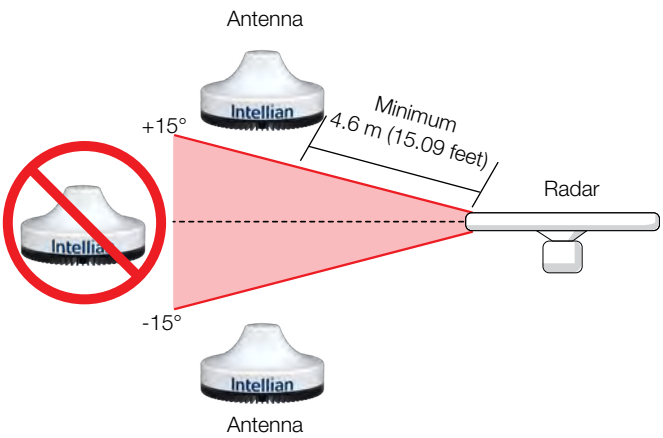

Figure 2: Potential RF Interference

4.1.2 RF Hazard Precautions

The antenna is designed to be used with radiation transmitting equipment manufactured by others. Exposure to RF radiation, including exposure associated with improper use of the transmitting equipment, may be hazardous to people who work close to the Above Deck Unit. Ensure the safety of personnel who work with in the system.

During transmission, ensure to keep the minimum safety distance. The recommended minimum safety distance to the reflector on the focal line is about 60 cm (23.6 inch) based on a radiation level of 1 mW/cm^2 that applies under an uncontrolled environment. No hazard exists >20° below the antenna's mounting plane.

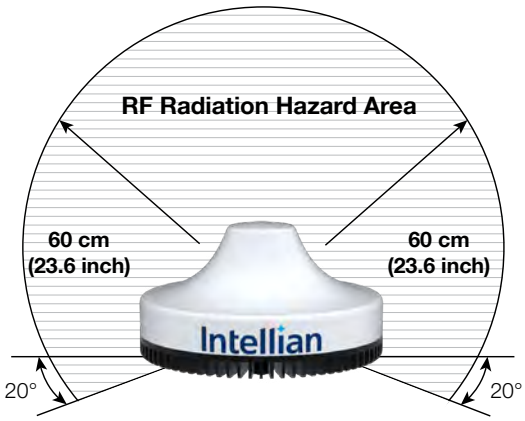

Figure 3: RF Hazard Precautions

4.2 System Package

4.2.1 Above Deck Unit (ADU)

The Above Deck Unit (ADU) is an antenna unit with an omnidirectional antenna, active RF circuitry, BCX (L-band modem), and a GNSS module. The radome protects the antenna unit from a severe marine environment. All signals (and DC power) shall pass through a single coaxial antenna cable, which connects the ADU to the BDU.

Figure 4: Above Deck Unit (ADU) / Antenna Unit

4.2.2 Below Deck Unit (BDU)

The Below Deck Unit (BDU) supports voice and data communications in a marine environment. The BDU is the main control unit of an antenna system that monitors and controls the antenna operation through Intellian's web-based software. The BDU contains user interfaces and controls all communication between the ADU and the local communication devices such as phones, and computers, etc.

Figure 5: Below Deck Unit (BDU)

4.2.3 Packing List

Before beginning installation, make sure you have all the included components.

The ADU Package & BDU Package are provided in one box.

NOTE: The SIM card is provided by the service provider and may be packaged separately.

Above Deck Unit (ADU) Package

Item	Q'ty	Size	Description
Above Deck Unit (ADU)	1	240mm x 240mm x 143mm	Antenna Unit
Antenna Mounting Template	1		Antenna Mounting Template
Hex Bolt	5	M6 x 20L	To Mount Antenna on Mounting Surface (M6 Bolt Kit)
Spring Washer	5	M6	
Flat Washer	5	M6	

Below Deck Unit (BDU) Package

Item	Q'ty	Size	Description
Below Deck Unit (BDU)	1	315 mm x 190 mm x 42 mm	Below Deck Unit
DC Power Cable	1	1 m	BDU Power
Ethernet Cable (RJ45 / LAN)	1	1 m	To Connect BDU to PC
Wi-Fi Antenna	1		
Quick Installation Guide (QIG)	1		Quick Installation Guide
Tapping Screw	5	M5 x 16L	To Fix BDU (Direct Mounting Type)
Terminal Block	1	85 mm x 40 mm x 36 mm	For Inter-connection of Cables

19-inch Rack Mount Kit (Optional)

The 19-inch Rack Mount Kit can be purchased separately. When this kit is supplied, it is packaged in the BDU Package. Intellian recommends using a 19" rack shelf (not supplied) to support the BDU in the rack.

Item	Q'ty	Size	Description
AC Power Cord (USA)	1	1.5 m	BDU Power Cord (110 V)
AC Power Cord (CEEE7/7)	1	1.5 m	BDU Power Cord (220 V)
AD-DC Adaptor	1		BDU Power Adaptor (150 W)
Rackmount Plate	1		Kit for Rackmount Plate
Pan Head Screw (with Spring & Flat Washer)	5	M4 x 16L	
Cable Tray	1		Kit for Cable Tray
Flat Head Screw	4	M3 x 6L	

Antenna Pole Mount Kit (Optional)

The Antenna Pole Mount Kit can be purchased separately. When this kit is supplied, it is provided in a separate box.

Item	Q'ty	Size	Description
Pole Bracket	1		
Pole Tube	1		
Hex Bolt	10	M6 x 20L	
Hex Bolt	5	M6 x 25 L	Only for FB250/FleetOne use
Spring Washer	10	M6	
Flat Washer	10	M6	
40A (1½ inch) Pole Bushing	1		For Mounting Antenna on 40A (1½ inch) Pole
Socket Set Screw	4	M12 x 12L	

4.3 System Cables

Make sure of the following before installing system cables.

1. All cables need to be well clamped and protected from physical damage and exposure to heat and humidity.
2. Don't use any acutely bent cable.
3. Use watertight glands or swan neck tubes on exposed bulkheads or deck heads where the cable passes through.
4. For installing cables longer than the recommended length, consult with Intellian Technologies first.

4.3.1 Antenna RF Cable (Connecting ADU - BDU)

Intellian provides the Antenna RF Cable (LMR200, 25 m) for connecting ADU and BDU. Due to the signal losses across the length of the RF coax on L-Band, it must only use the RF cables using the 50 Ω coaxial cable types for standard system installation. The use of different type of cables (75 Ω coaxial types etc.) can cause problems. Check the instructions from the cable supplier. The table below shows the recommended cable types and maximum cable lengths for the antenna system.

Coaxial Cable Type	Attenuation (@ 900 MHz)	*Max. Cable Length (17.5 dB loss @ 900 MHz)	Min. Bend Radius
LMR200	0.326 dB/1 m	50 m	Installation 12.7 mm (0.5 in.)
LMR300	0.199 dB/1 m	60 m	Installation 22.2 mm (0.88 in.)
LMR400	0.128 dB/1 m	100 m	Installation 25.4 mm (1 in.)

- Connector type: TNC
- Optimal tightening torque: 1.5 N-m
- Maximum DC resistance of RF cable: 1.3 Ω
- *Maximum RF loss at 900MHz: 17.5 dB including connector

4.4 Unpacking System Package

Follow the steps for easy and safe unpacking. The system package consists of two sub-packages that an ADU Package and a BDU Package.

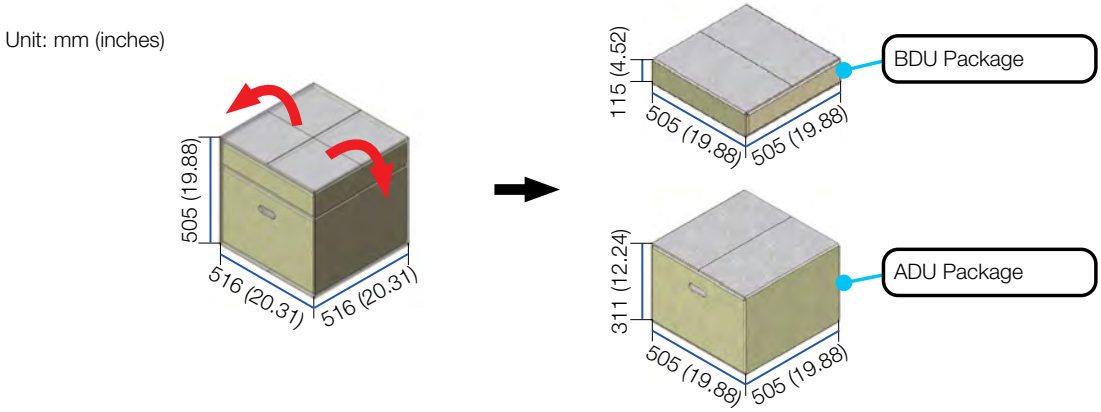

Figure 6: Unpacking System Package (with ADU & BDU Sub-package)

1. Remove the top cover and take out the BDU package including a Quick Installation Guide, a BDU Unit, a Wi-Fi Antenna, a DC Power Cable, an Ethernet Cable, a BDU Bolt Kit, and a Terminal Block. The 19-inch Rack Mount Kit (Optional) can be purchased separately.

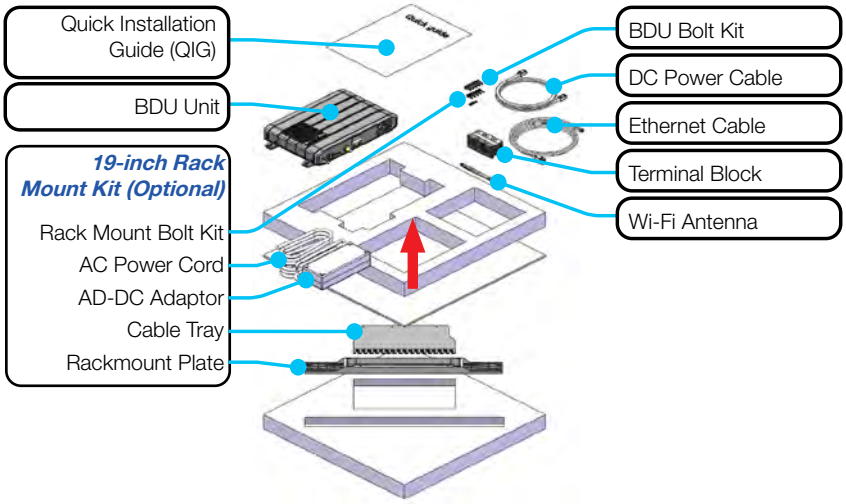

Figure 7: Unpacking BDU Package

2. Take out the ADU package including an Antenna Mounting Template, an ADU Bolt Kit, an Antenna RF Cable, and an ADU Unit.

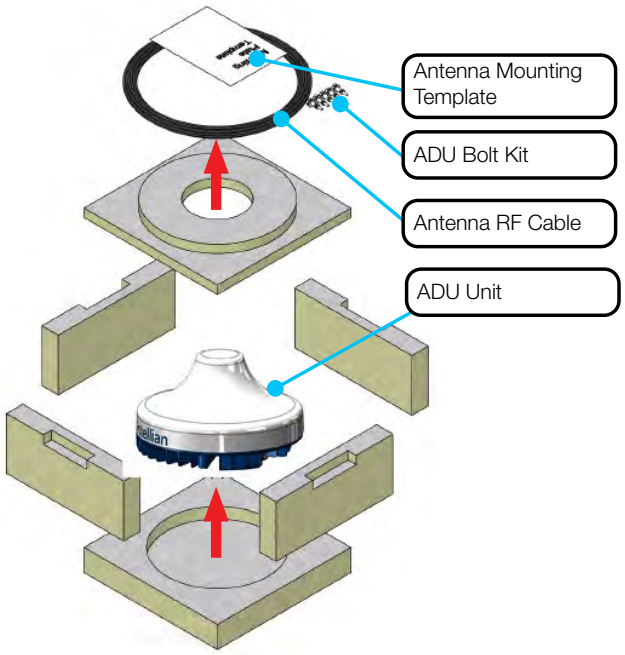

Figure 8: Unpacking ADU Package

Chapter 5. Installing ADU

5.1 Antenna Dimensions

Before installing the antenna unit, confirm its height and diameter (see figure below). To protect the cable connectors on the bottom of radome, the antenna is shipped from the factory with protective stickers on the Inner Holes and protective covers on the Outer Holes .

Unit: mm (inches)

Unit: mm (inches)

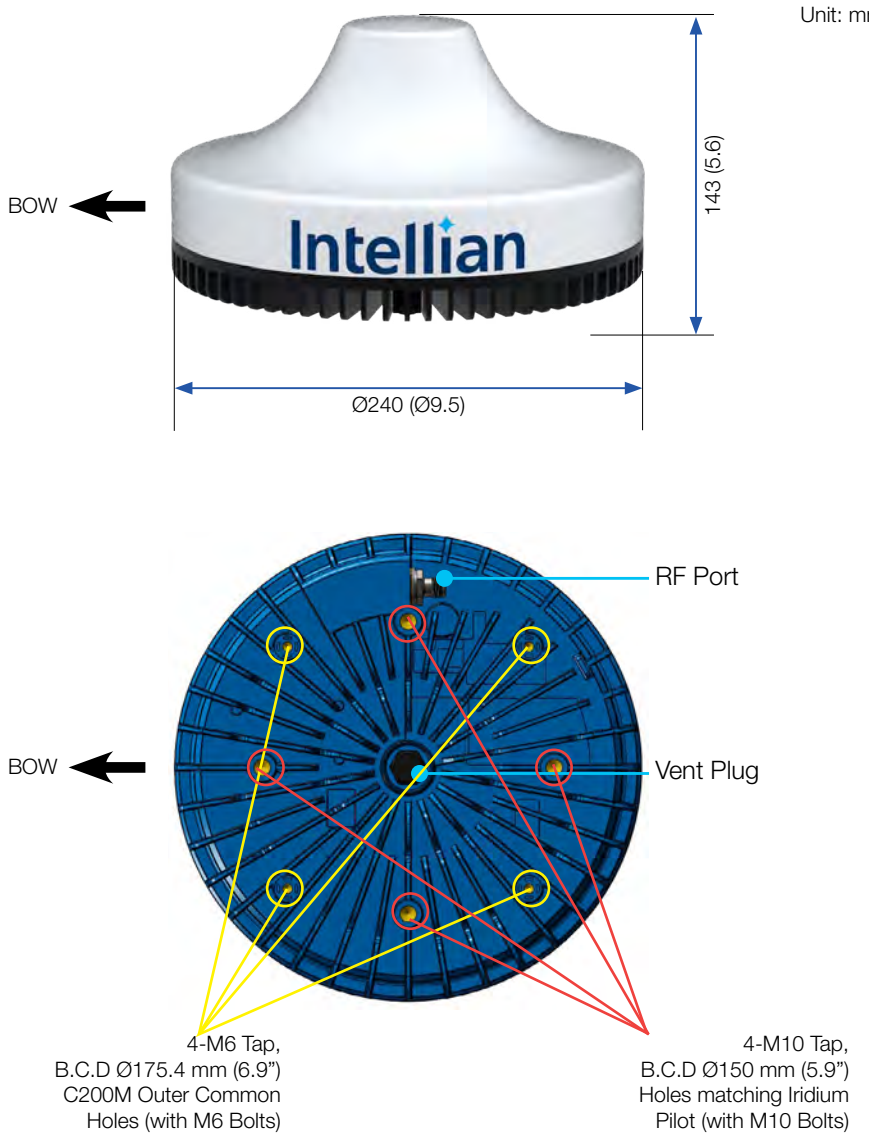

Figure 9: Antenna Dimensions

5.2 ADU Mounting Hole Pattern

Use the supplied mounting template when drilling mounting holes on the mast. The hole placement for the antenna must match the mounting hole pattern on the template.

The lower radome has two types of industry-standard mounting holes, each with four mounting points. This hole pattern is compatible with other companies' mounting holes. Select one of the two mounting types to secure the antenna to the desired mounting surface.

- **C200M Outer Common Holes**: Mount the antenna using **'C200M Outer Common Holes'** (with M6 Bolts). Intellian offers the Antenna Pole Mount Kit (separate purchase) that uses C200M Outer Common Holes (with M6 Bolts) to mount the antenna on a pole.

WARNING

When reusing an existing mast, make sure the location of the holes on the mast correspond to the hole locations and sizes printed on the mounting template.

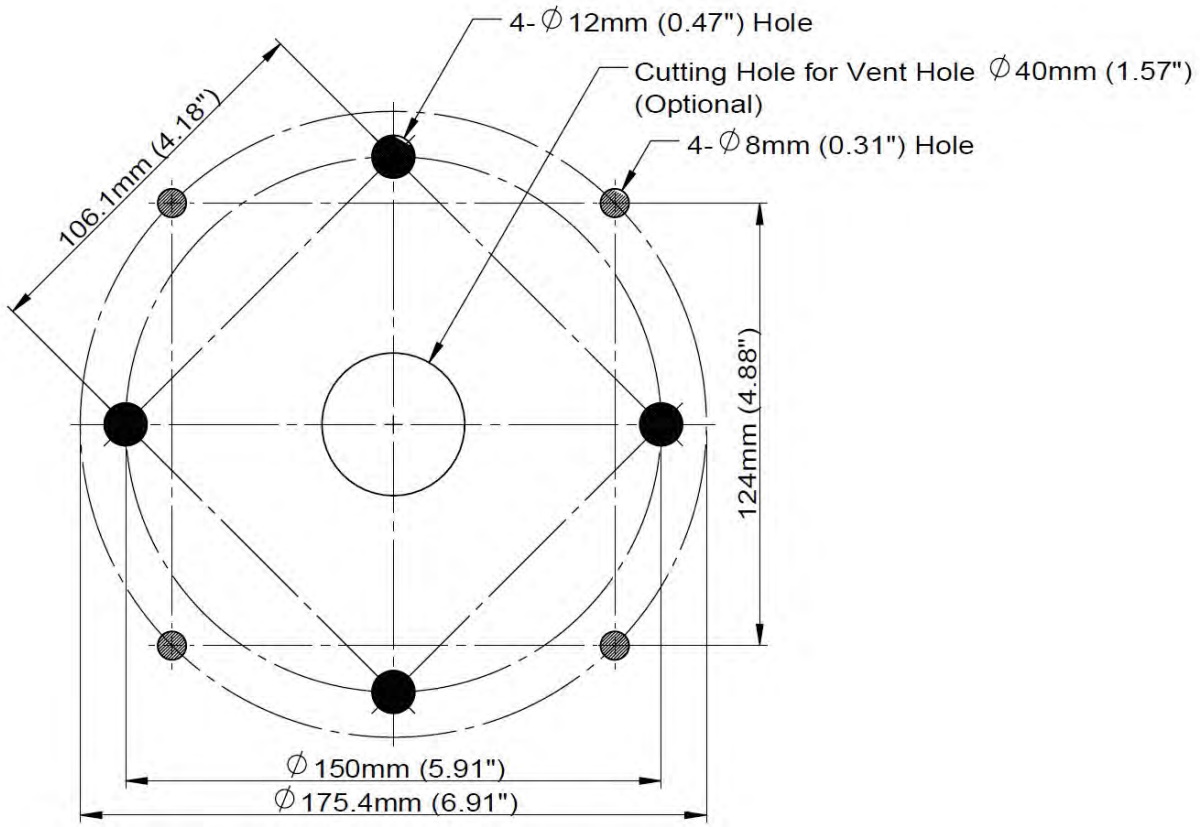

Figure 10: ADU Mounting Hole Pattern

5.3 Mast Designing (Installation Example)

The installation mast must be robust enough to prevent flection, vibration, and sway when an external force is exerted on the mast with antenna and radome attached. Intellian strongly recommends installing the antenna less than 1200mm (47") above the deck. The flange thickness must be at least 8 mm. Refer to the following mast drawing for more details.

Option 1. Recommended Mast Design using C200M Outer Common Holes (with M6 Bolts)

(Unit: mm (inch))

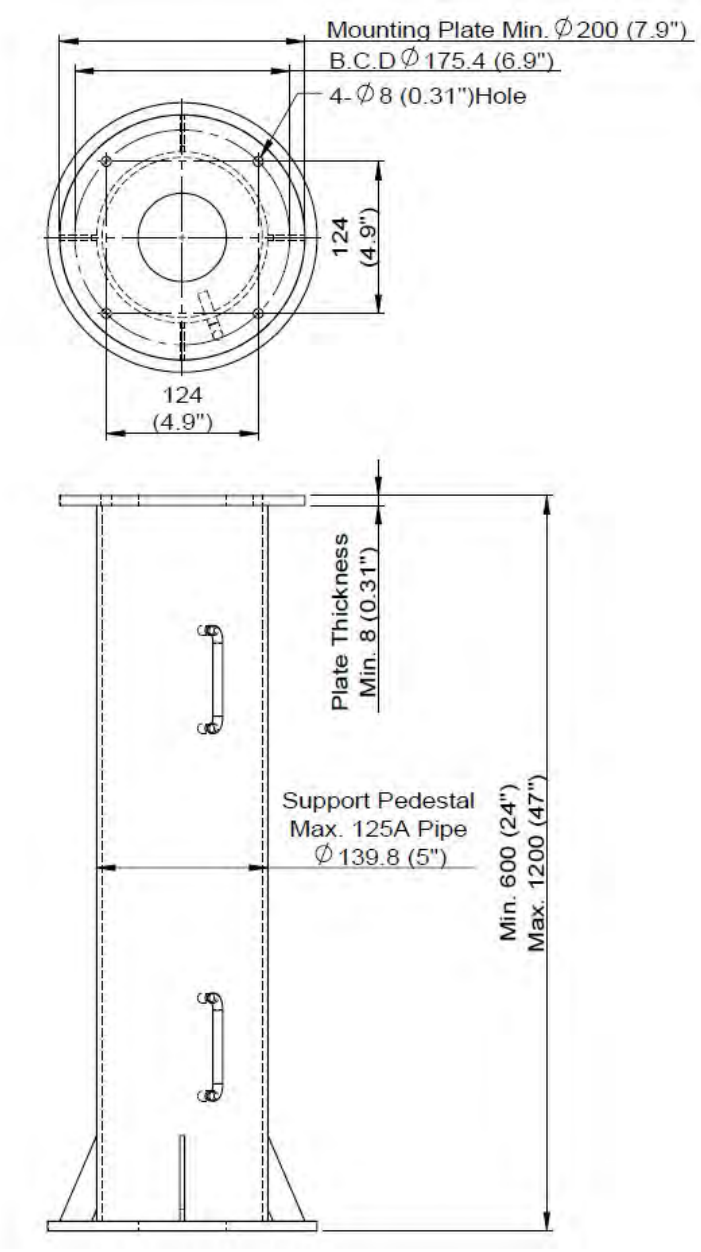

Figure 11: Recommended Mast Design using C200M Outer Common Holes (with M6 Bolts)

Option 2. Recommended Mast Design using Holes matching Iridium Pilot (with M10 Bolts)

(Unit: mm (inch))

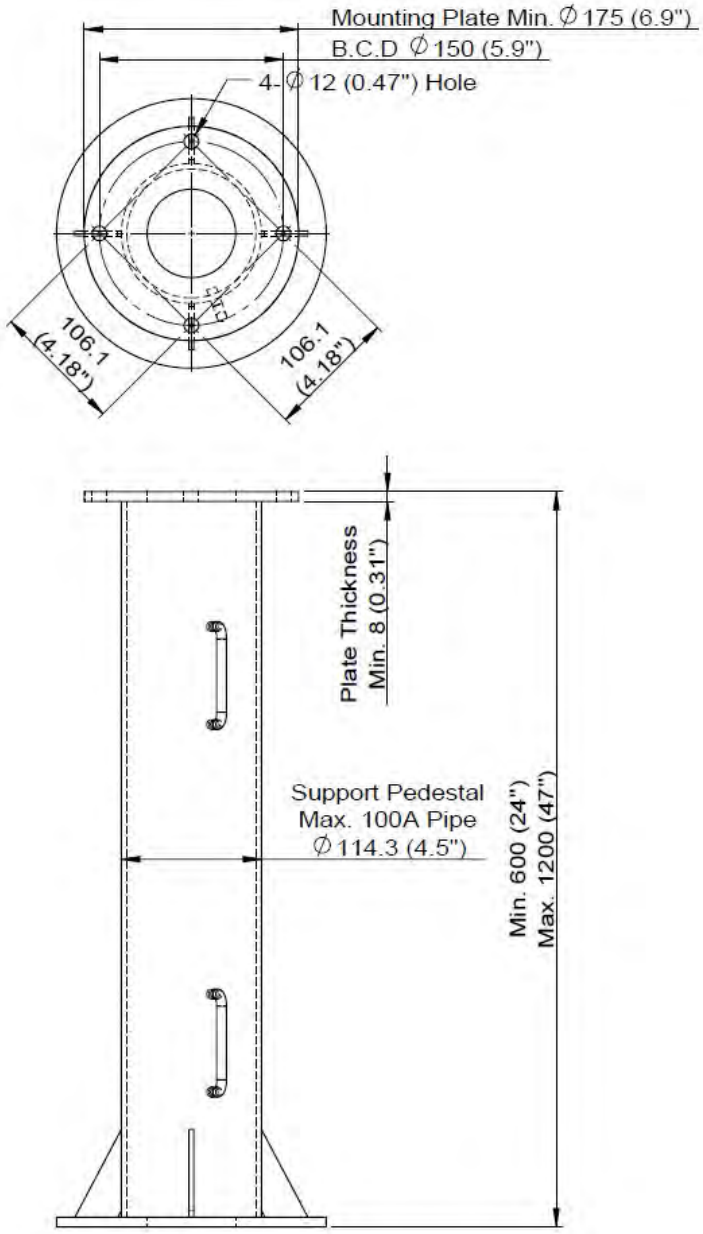

Figure 12: Recommended Mast Design using Holes matching Iridium Pilot (with M10 Bolts)

5.4 Mounting Antenna

The lower radome has two types of industry-standard mounting holes, each with four mounting points. Select one of the two mounting types to secure the antenna to the desired mounting surface. Bring the provided Antenna Mounting Template and the ADU Bolt Kit from the ADU package. Create the appropriate hole pattern in the desired mounting surface for the chosen mounting bolts type.

5.4.1 Mounting Antenna using C200M Outer Common Holes (with M6 Bolts)

First, remove the protective stickers on the Inner Holes. Check the position of Ⓐ the antenna's RF port and BOW direction. Lift the antenna above the mounting surface using hands and carefully put the antenna down in place. Before assembling bolts, apply Loctite #263 to the bolt's threads to ensure the bolts are fastened firmly. Insert Ⓑ the bolts and washers from under the mast into the radome then fasten them to the nuts assembled inside the radome using the torque wrench.

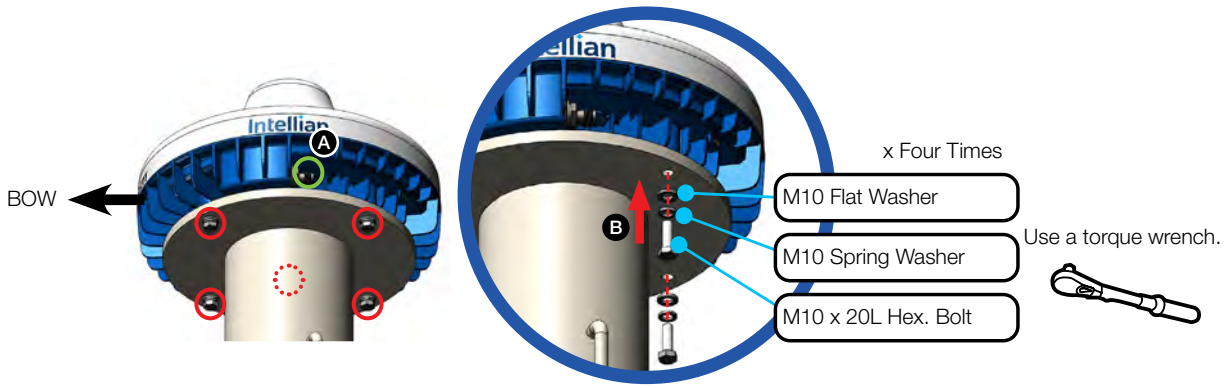

Figure 13: Mounting Antenna using C200M Outer Common Holes (with M6 Bolts)

5.4.2 Mounting Antennas using Holes matching Iridium Pilot (with M10 Bolts)

First, remove the protective covers on the Outer Holes. Check the position of Ⓐ the antenna's RF port and BOW direction. When placing the antenna on the mounting surface, be careful of the direction of the cutting holes. Lift the antenna above the mounting surface using hands and carefully put the antenna down in place. Before assembling bolts, apply Loctite #263 to the bolt's threads to ensure the bolts are fastened firmly. Insert Ⓑ the bolts and washers from under the mast into the radome then fasten them to the nuts assembled inside the radome using the torque wrench.

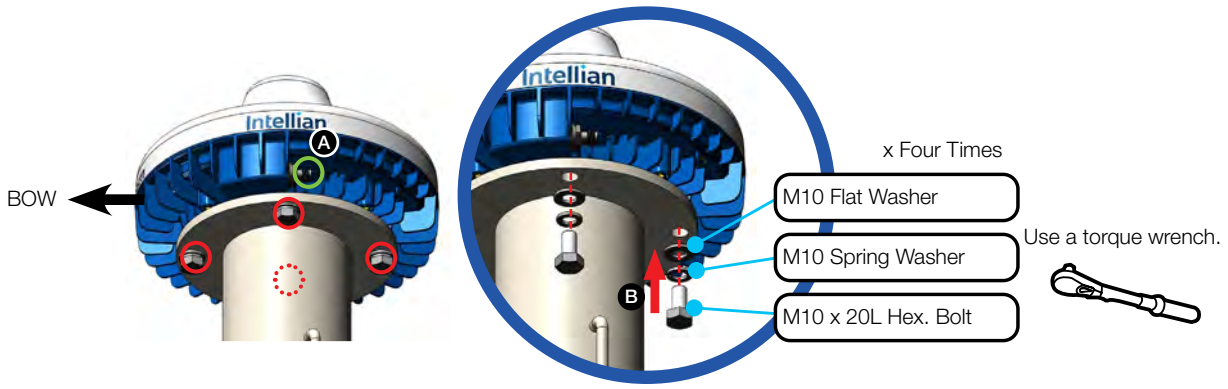

Figure 14: Mounting Antennas using Holes matching Iridium Pilot (with M10 Bolts)

5.4.3 Mounting Antenna on Pole (Optional)

Intellian offers the Antenna Pole Mount Kit (separate purchase) to mount the antenna on the pole. The kit is designed to work on the 40A pole. The kit has mounting holes that match the inner hole with M6 bolts on the bottom of the antenna.

Name	Diameter (inch)	External Diameter (mm)
40A	1½	48.6

1. When mounting antenna on the 40A pole, the 40A pole bushing needs to be installed inside pole tube additionally. Place the 40A pole bushing inside pole tube, then tighten them on the top end of the 40A pole using bolts. Before assembling bolts, apply Loctite #263 to the bolt's threads to ensure the bolts are fastened firmly.
   *The pole tube Inner Diameter is Ø52 mm.

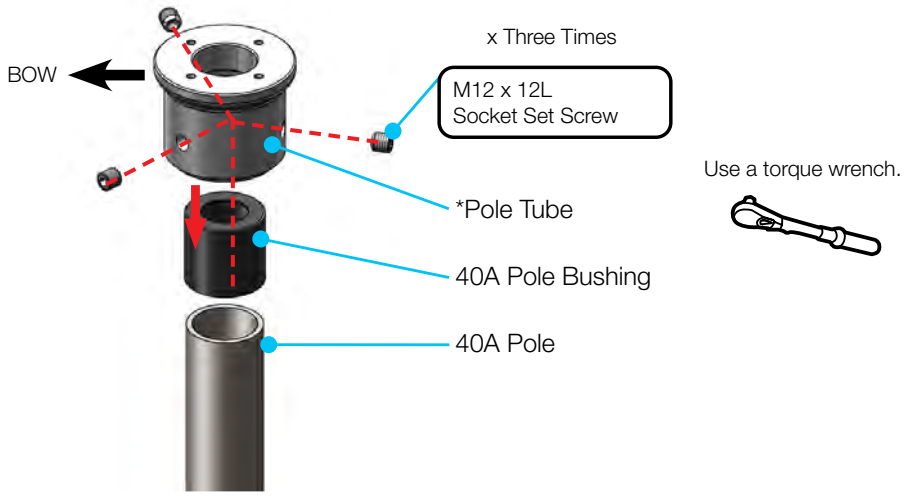

Figure 15: Installing 40A Pole Bushing inside Pole Tube

2. Ⓐ The end of one leg of the pole bracket must be aligned with the BOW direction. Place the pole bracket onto the pole tube then tighten them using bolts. Before assembling bolts, apply Loctite #263 to the bolt's threads to ensure the bolts are fastened firmly.

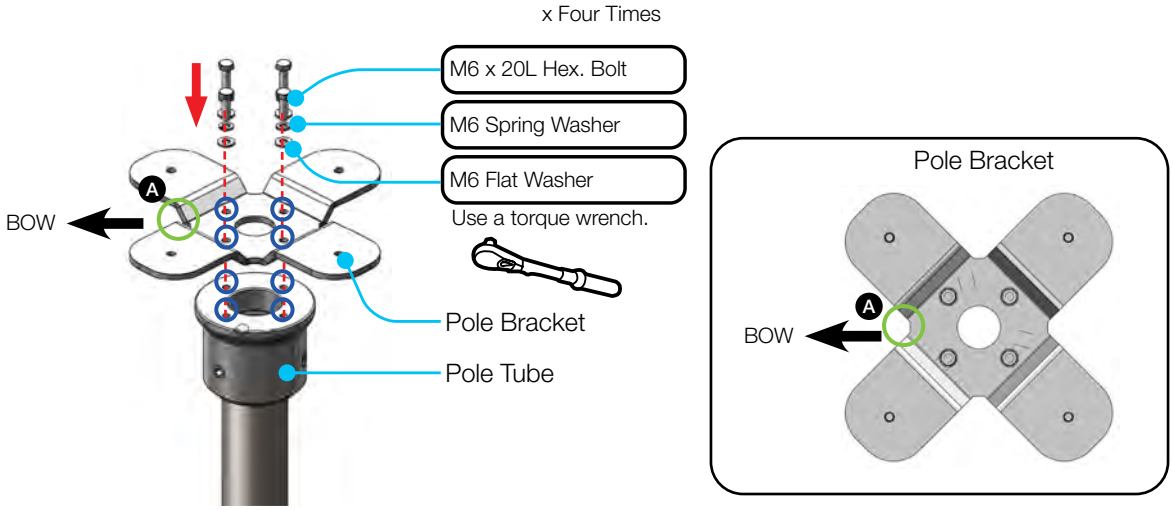

Figure 16: Installing Pole Bracket

3. Place the antenna on the pole-mounted bracket then tighten them using bolts. Before assembling bolts, apply Loctite #263 to the bolt's threads to ensure the bolts are fastened firmly.

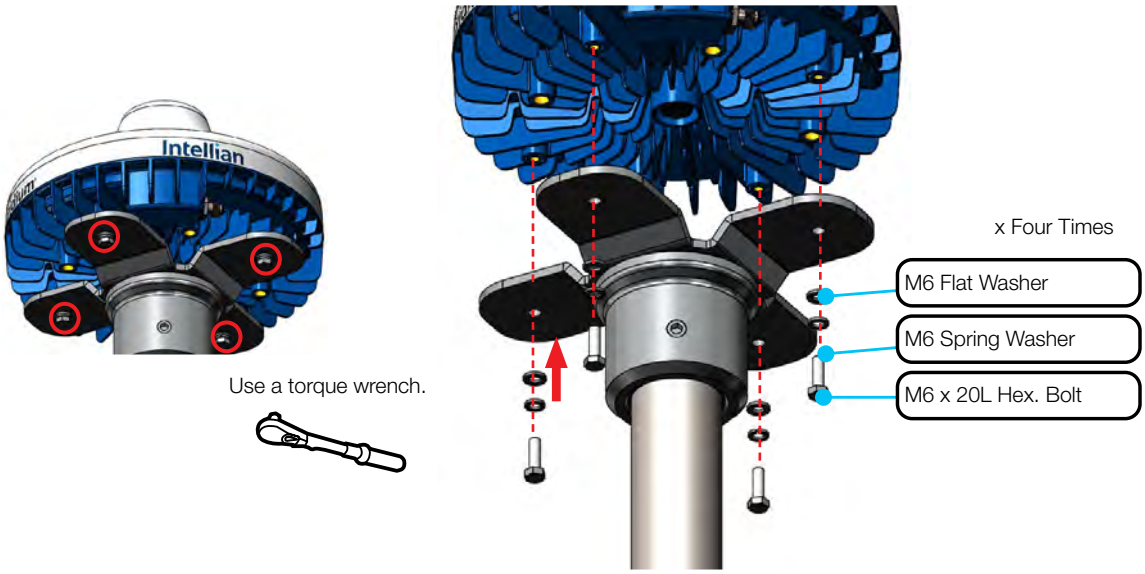

Figure 17: Mounting Antenna on Pole Mounted Bracket

5.5 Vent Hole

In some weather conditions, there may occur condensation and moisture inside the ADU. The vent hole is designed to allow easy air exchange and thus ensures that the enclosed area remains dry, and prevent water condensation. There is no need to open the vent hole assembled at the factory.

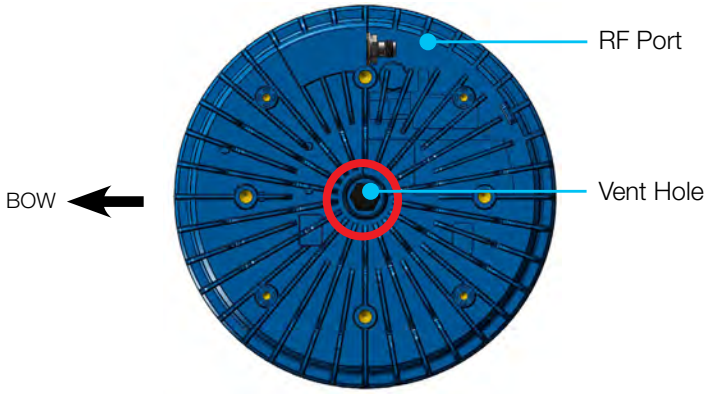

Figure 18: Vent Hole

5.6 Connecting Antenna RF Cable

The cable must be routed from the antenna and through various areas of the ship to end up at the Below Deck Unit. When pulling the cables in place, avoid sharp bends, kinking, and excessive force. After placement, seal the deck penetration gland and tie the cable securely in place. The cable bracket must be installed on the mast to fix the relevant cable. The gooseneck must be installed on the side of the mast to protect the relevant cable against water. The supplied RF cable connector has the rubber grommet to protect inside the ADU from any water.

1. Route the RF cable from the gooseneck placed on the deck to the antenna. Maintain a cable length at least 2 m considering service loops when routing the cable on the mast.
2. Connect the RF cable to to the RF port on the antenna and the **Antenna** port of the BDU. After connecting the cable, secure it to the cable bracket on the underside of the antenna using a cable tie.

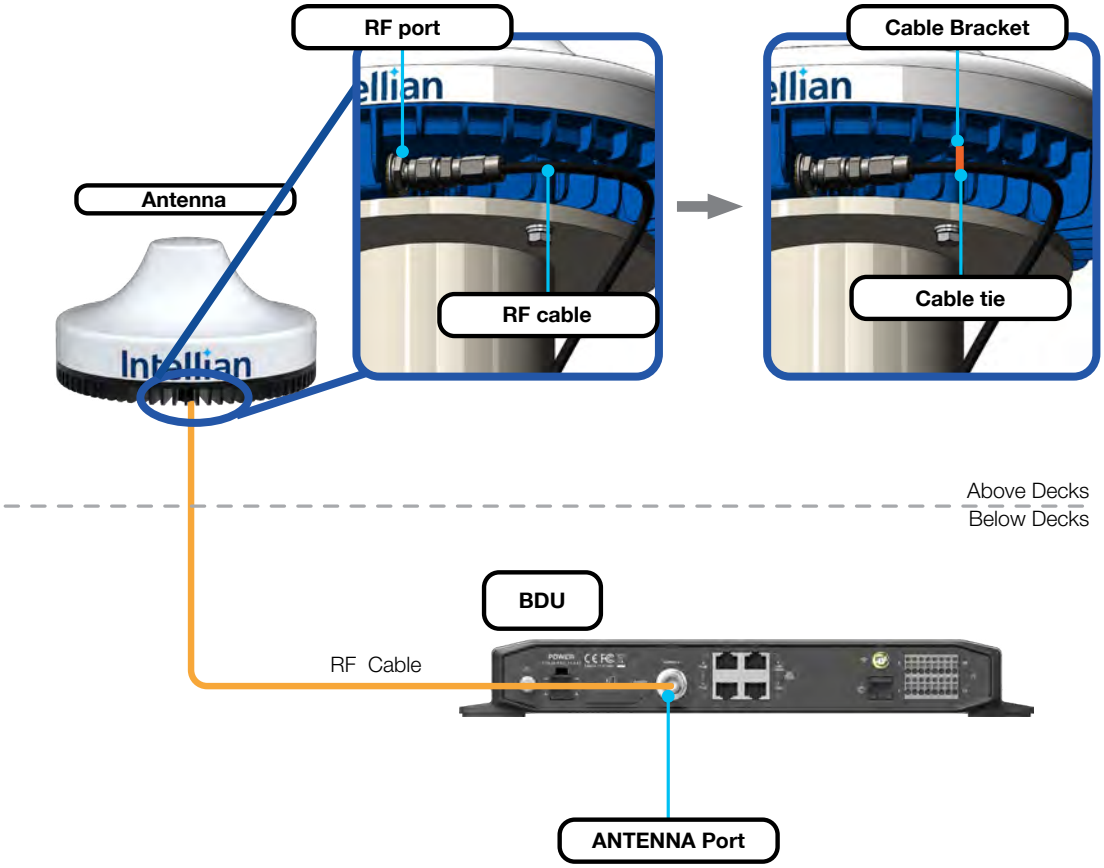

Figure 19: Connecting Antenna RF Cable

3. Adjust the cable lengths, and then securely fix the cables on the mast cable brackets using the cable ties. Since the cable connector at the bottom of radome is waterproofed at the factory, there is no need to work waterproofing.

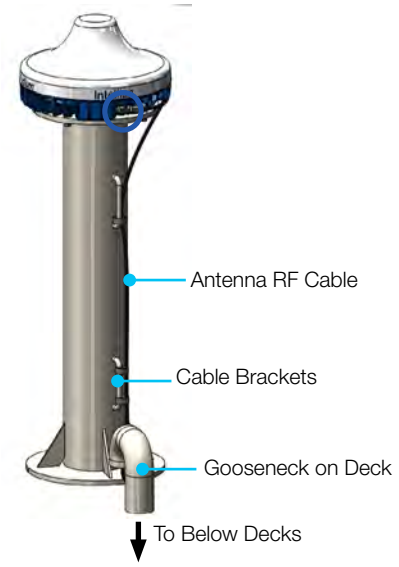

Connecting Antenna RF Cable using C200M Outer Common Holes (with M6 Bolts)

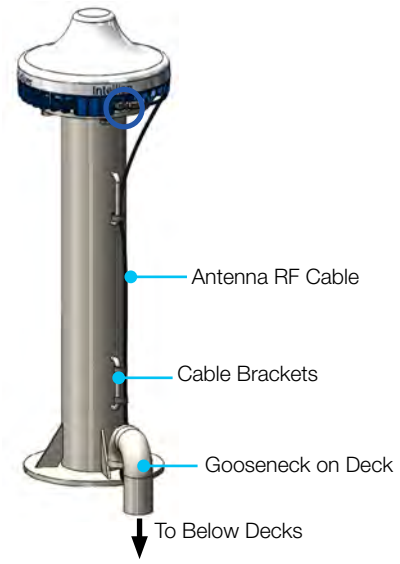

Connecting Antenna using Holes matching Iridium Pilot Holes(with M10 Bolts)

Figure 20: Routing RF Cable

Chapter 6. Installing BDU

The Intellian offers two versions of BDU installation, one can be installed to the surface of the wall or desktop, and one can be installed to the 19-inch rack frame using the BDU Rack Mount Kit (separate purchase).

6.1 Selecting BDU Installation Site

The BDU should be installed below the deck in a location that is dry, cool, and ventilated. The front panel of BDU should be easily accessible to users.

6.2 BDU Dimensions

Confirm the dimensions of the BDU before installing it.

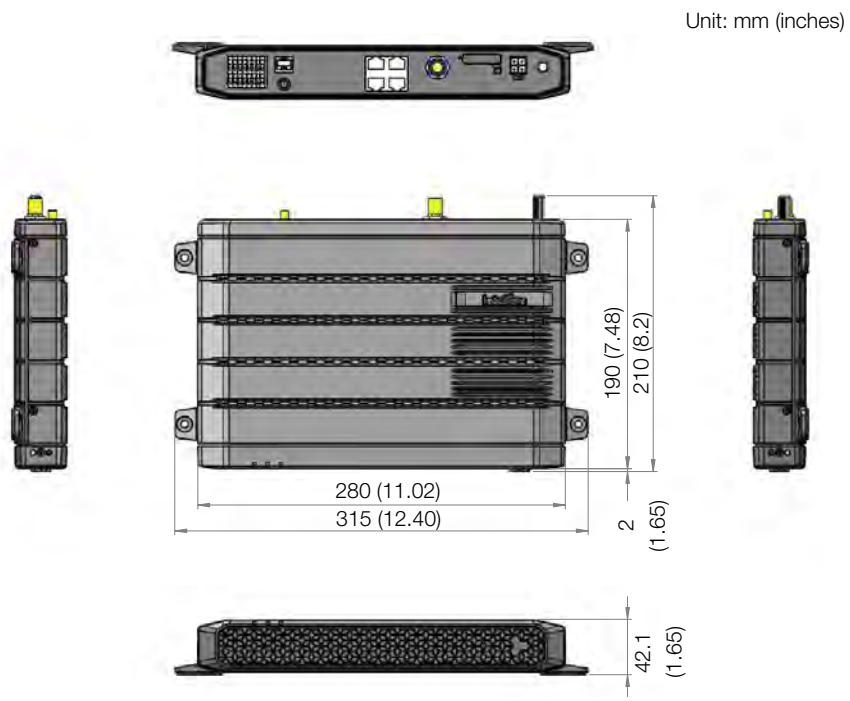

Figure 21: BDU Dimensions (Direct Mounting Type)

Unit: mm (inches)

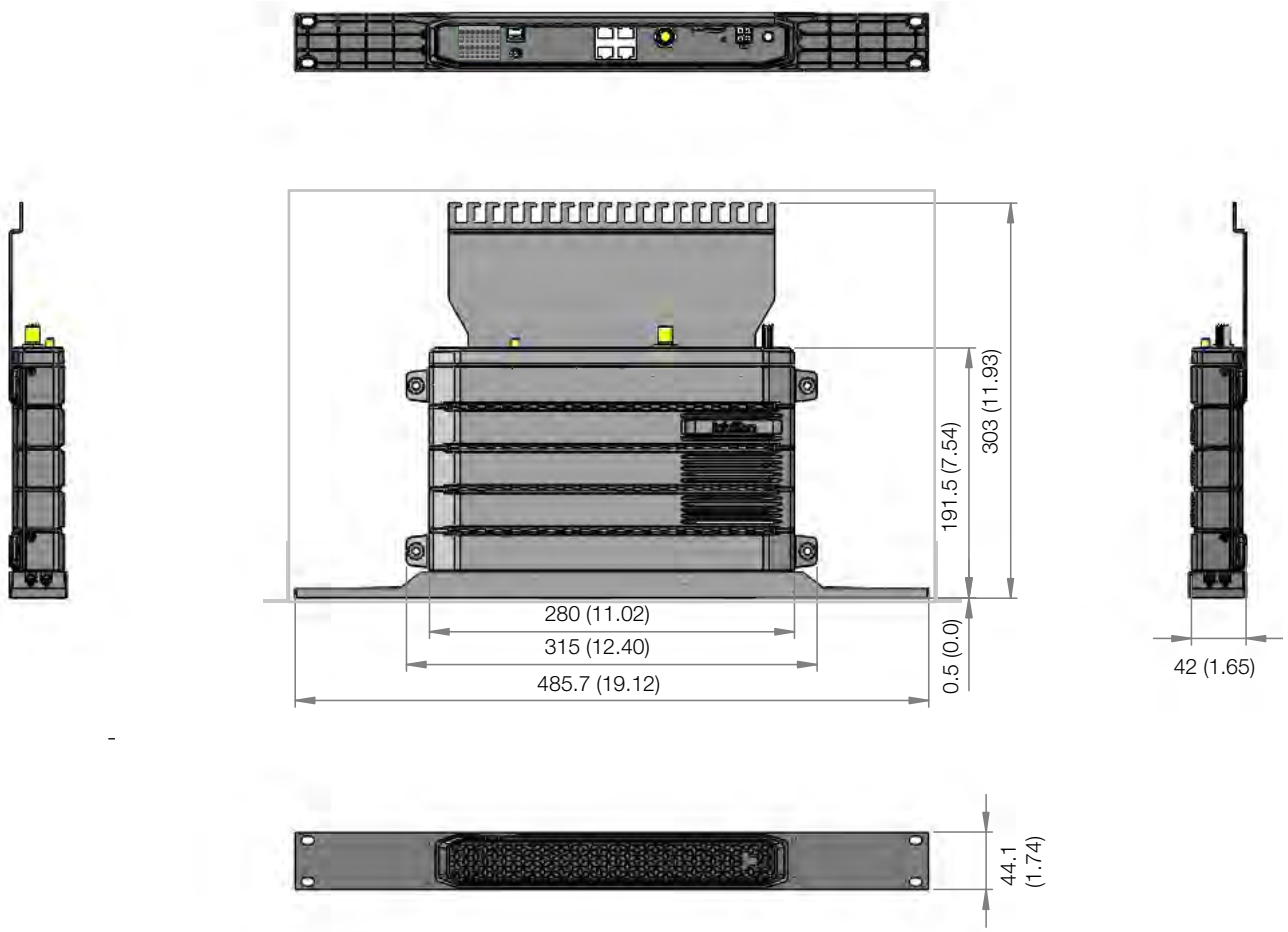

Figure 22: BDU dimensions (installed using 19-inch BDU Rack Mount Kit)

6.3 BDU Mounting Template

The BDU mounting holes must be in the exact same place as shown in the provided mounting template below.

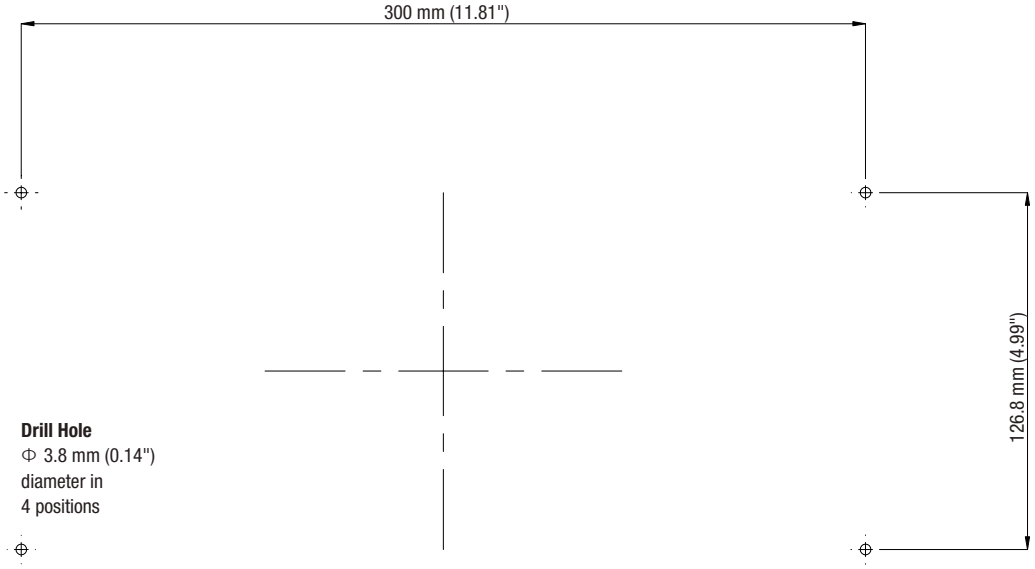

Figure 23: BDU Mounting Template

6.4 Mounting BDU

The BDU can be mounted in any orientation but for best performance, Intellian recommends that it is mounted horizontally.

WARNING

Ensure that the cables connected to the BDU are long enough to prevent damage when the BDU is pulled out from the rack.

6.4.1 Direct Mounting Type

The BDU is designed with four corner mounting holes to make direct mounting on the wall or desktop easily.

1. Mount the BDU on the mounting surface by inserting four screws through the mounting holes.

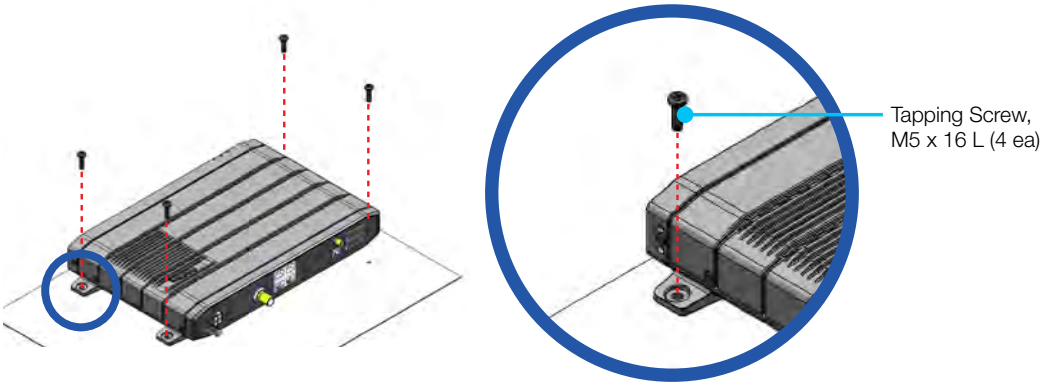

Figure 24: Direct Mounting of BDU

6.4.2 19" Rack Mounting Type (Optional)

Intellian offers the BDU Rack Mount Kit (separate purchase) including the rackmount plate and cable tray to mount the BDU in a 19" rack. Intellian recommends using a 19-inch rack shelf (not supplied) to support the BDU in the rack.

1. Using the Screws supplied, attach the cable tray to the BDU.

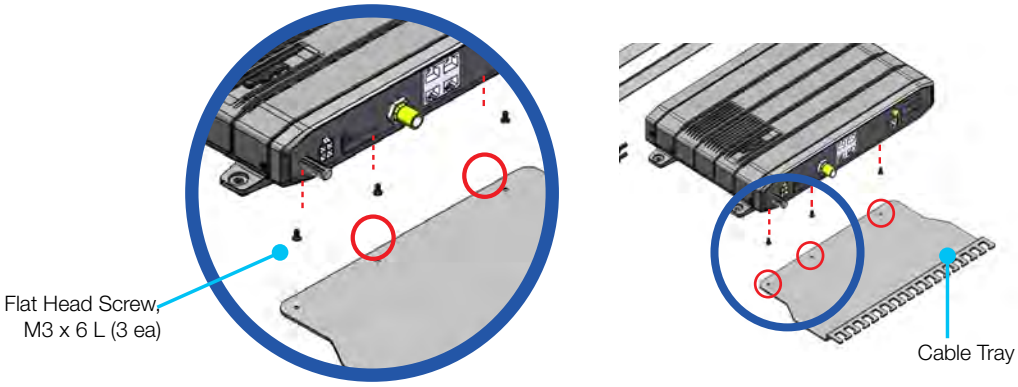

Figure 25: Attach Cable Tray to BDU

2. Using the Screws supplied, attach the rackmount plate to the BDU.

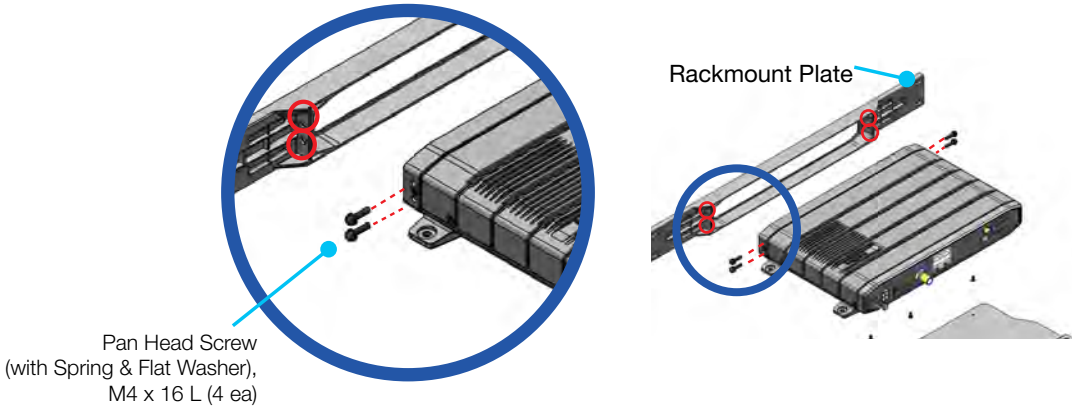

Figure 26: Attach Rackmount Plate to BDU

3. Slide the BDU assembly into a 19" rack frame. Mount the screws in each side through the holes in the front and fasten the screws to the rack. Make sure that the BDU assembly is mounted securely according to the requirements for your 19" rack. In case of using a provided AC-DC adapter for AC power connection, mount it securely in a safe place. After connecting all cables, fix the cables on the end of the cable tray using cable ties.

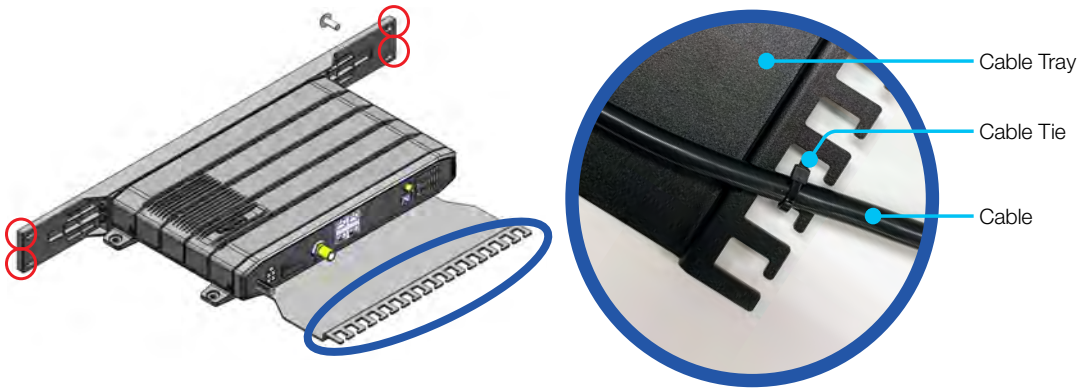

Figure 27: Mount BDU Assembly into 19" Rack

6.5 Antenna System Configuration

The basic system consists of one antenna and one BDU. Separate purchase of standard items including POTS phones, SIP phones, computers, etc. may be needed. A modem can be connected to the WAN port for data at least-cost routing operations. Voice calls are always routed through the Iridium system unless using a data call application. For your satellite communication system to work properly, connect the cables according to the configuration below.

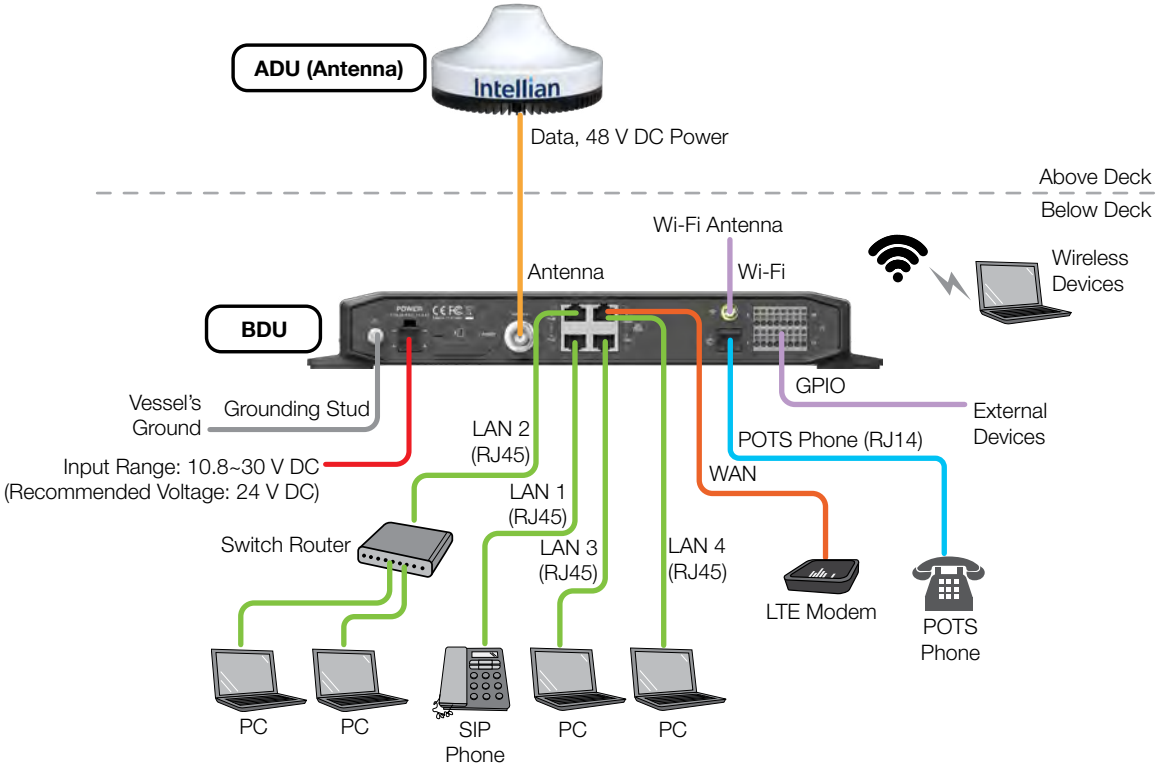

Figure 28: C200M System with Connected Devices

6.5.1 Data Sessions and Voice Calls

The System provides up to 3 high-quality voice calls, multiple data sessions, Wi-Fi, and supports up to 18 extensions (including 2 analog phones and 16 sip phones).

The BDU communicates directly with SIP phones on any of the 4 LAN user ports (LAN 1, 2, 3, or 4). The SIP phones register directly to the SIP server in the BDU.

6.6 BDU Cable Connection

6.6.1 BDU Back Panel View

The following figure shows the BDU back panel connectors.

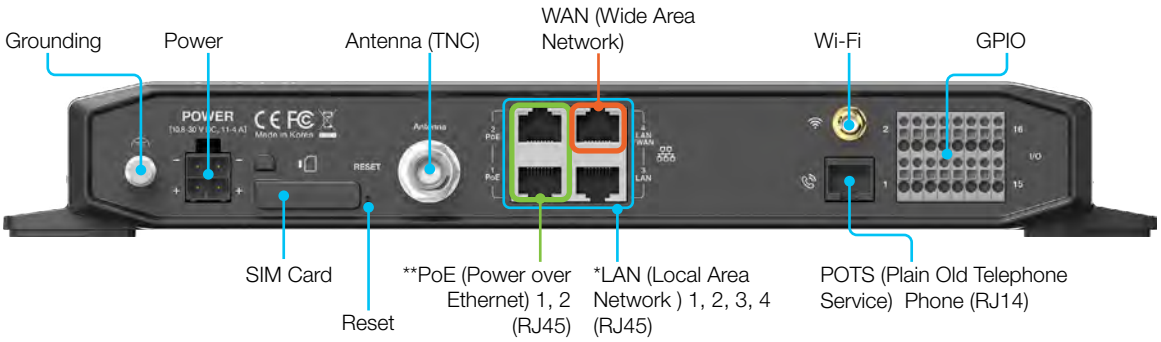

* All LAN ports are IEEE 802.3 compliant.
** Each PoE Port is designed to use 7.5W power. When using over 12.5W in one port, the PoE function will be stopped in port 1 or port 2.

Figure 29: BDU Back Panel View

6.6.2 BDU Connector Pinout Guide

The BDU connector pins and their corresponding descriptions are shown in the following figures and tables.

Power Connector (DC Power)

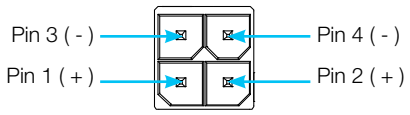

4 Contact Power Plug Male

Pin	Signal
1	+
2	+
3	-
4	-

Figure 30: DC Power Connector Pinout

Antenna Connector (TNC)

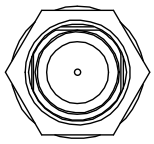

RF TNC Female

Conductor	Function
Inner	Data, 48 V DC Power
Outer	Ground

Figure 31: Antenna Connector (TNC) Pinout

LAN Connectors (1~4) (RJ45)

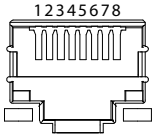

RJ-45 Female

Pin	Signal
1	Tx+
2	Tx-
3	Rx+
4	N/C
5	N/C
6	Rx-
7	N/C
8	N/C

Figure 32: LAN Connector (RJ45) Pinout

POTS Phone Connector (RJ14)

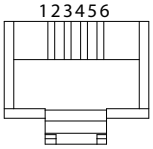

RJ14 & 6P4C
(6-Positions 4-Contacts) Female

Pin	Signal
1	N/C
2	T2+ (POTS Phone 2, no. 102)
3	R1- (POTS Phone 1, no. 101)
4	T1+ (POTS Phone 1, no. 101)
5	R2- (POTS Phone 2, no. 102)
6	N/C

Figure 33: POTS Phone Connector (RJ14 & 6P4C) Pinout

General Purpose Inputs/Outputs (GPIO) Connector

The BDU has a dedicated 16-pin connector to provide a GPIO (General Purpose Input/Output) interface to the external devices. All wires for the GPIO connector must use AWG 24 unscreened wire type.

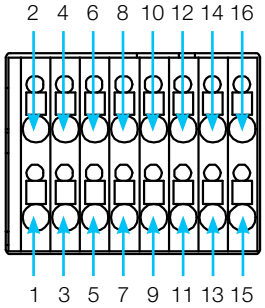

16-Pin Terminal Block

Pin	Signal	Explanation	Pin	Signal	Explanation
1	External Power Input	Power Input (DC 12 V ~ DC 24 V)	2	External Power Ground	Input/Output Ground
3	Input 1	• Satellite Data Prevention	4		
5	Input 2	• Force Prevent RF Activity	6		
7	N/A		8		
9	Output 1	• Incoming Call Alarm	10		
11	Output 2	• Data Connection Indication	12		
13	Output 3	• System Event Indication	14		
15	Remote Power On/ Off +	Remote Control of BDU Power +	16	Remote Power On/ Off -	Remote Control of BDU Power -

Figure 34: GPIO Connector Pinout

To use External GPIO, connect the external power (DC 12V ~ 24V). Refer to the External GPIO Block Diagram below.

External GPIO Block Diagram

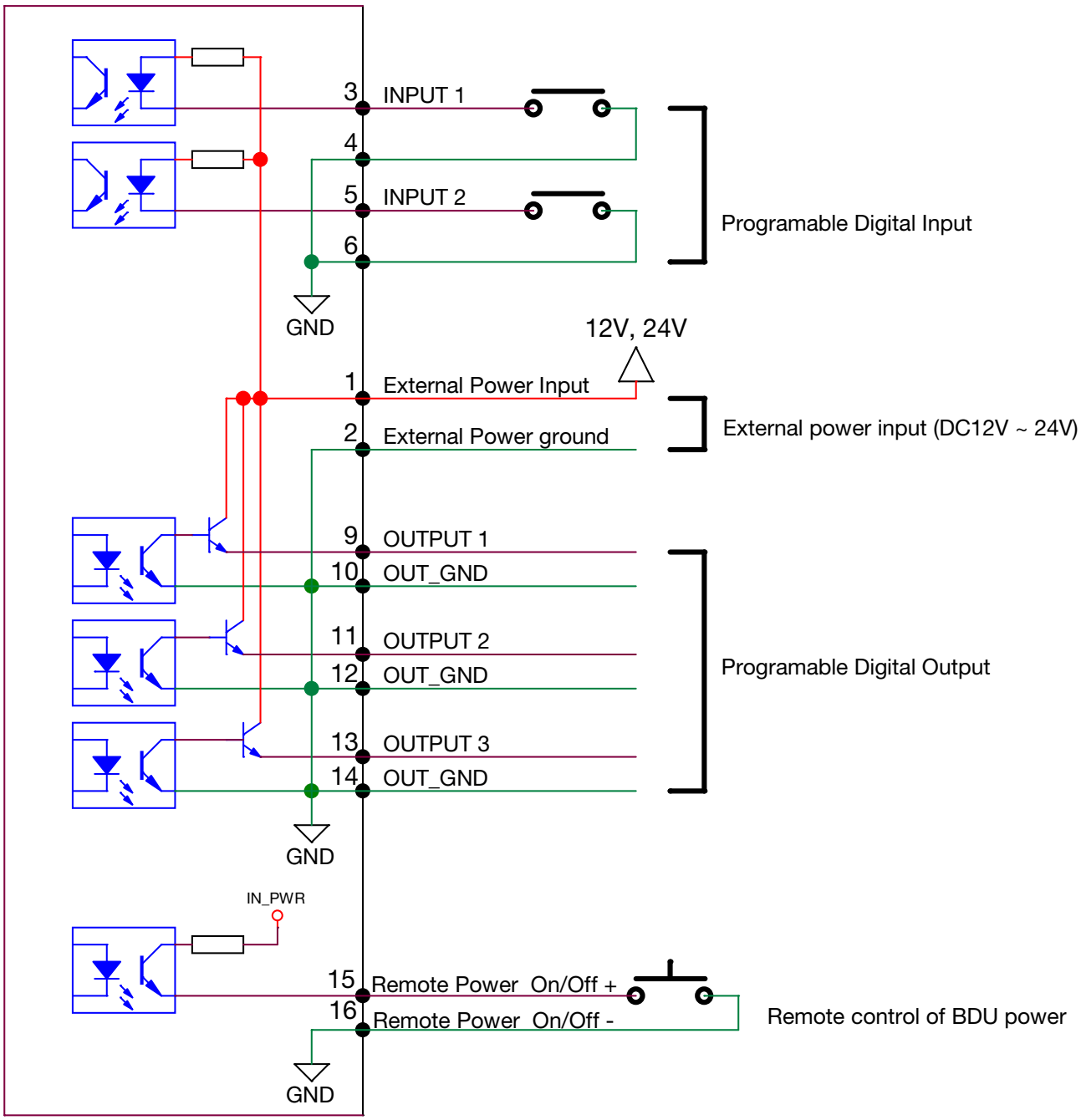

6.6.3 Connecting DC Power to BDU

You can supply DC power to the BDU in the following methods depending on the power supply available in the vessel. Intellian provides a DC Power Cable, an AC-DC Adapter* (optional), and a Terminal Block for the power connections.

* When the AC-DC adaptor is used the grounding can be connected between the Ground stud on the BDU and the vessel ground. The spare part number is MC-0001 (AC-DC adaptor)

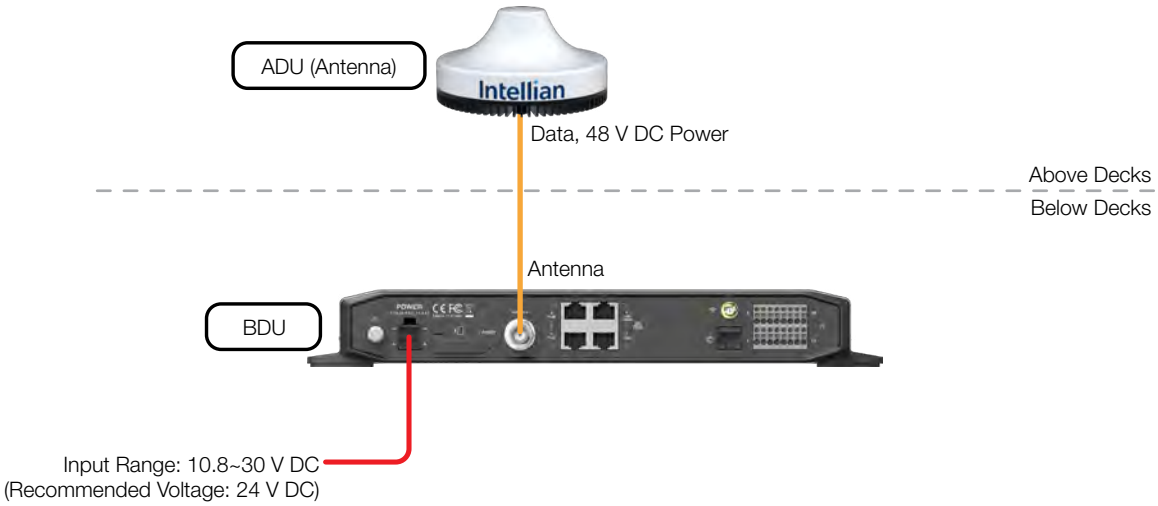

Figure 35: DC Power to BDU Connection

1. Connecting to Battery (default): Using the DC power cable (1 m), supply the DC power to the BDU from the battery. The power cable is installed with the Molex connector (P/No. 1716920204, Max. AWG 12). Use 1~2 m (3.28~6.56 ft) length wire for the power supply to prevent voltage drop. If you need an extended length of power cable, refer to the following table to choose a correct size cable. Check with your cable supplier for more information.

Cable Length	Maximum Wire Size	
	AWG	mm²
5 m (16.40 ft)	13	2.62
10 m (32.80 ft)	11	4.17
20 m (65.61 ft)	9	6.63

BDU Power Input Range: 10.8~30 V DC

2. Connecting to AC Power Source (optional): Using the AC-DC adapter (110~220V Input, 24 V DC output) and power cord, supply the DC power to the BDU from the AC power source. (You can find the AC-DC adapter in the 19-inch Rack Mount Kit).

NOTE

To connect multiple power cables from the power source, use a Terminal Block (supplied). Refer to the following page "How to Use Terminal Block" for more details.

How to Use Terminal Block

WARNING

Turn off the power before installing the wire nut connector.

Intellian provides a 3-position double-row barrier terminal block as below.

Terminal Block: KH-6060-3P

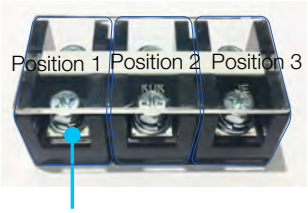

Barrier type terminal strip:
3 positions, 6 contacts

KH-6060-3P Specification	
Rated Voltage	600 V
Rated Current	60A (250 V)
Insulation Resistance	100MΩ min.
Dielectric Strength	2,500 VAC for 1min.
Wire	22 mm²
Terminal Screw	M6

Terminal Blocks Dimension

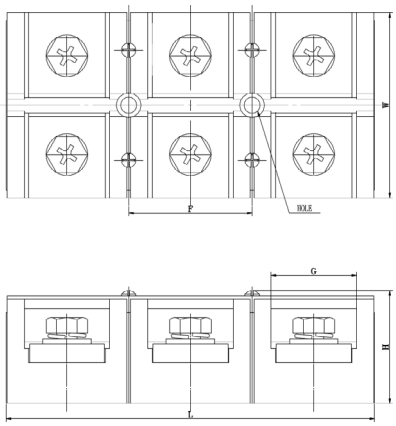

Rating/Pole	F(mm)	G(mm)	Hole(Ø)	L(mm)	W(mm)	H(mm)	Weight
60A 3P	28	16	5.2	85	40	36	142 g

Wiring Lug Dimension

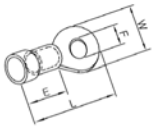

E	14.5 mm
F	Min. Ø 6.1
W	Max. 16.8 mm
L	35.5 mm

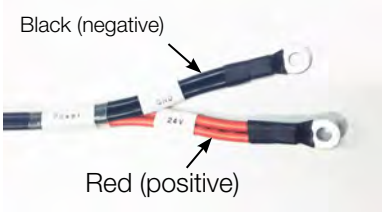	For the DC power wires, Red (positive) and Black (negative), you can connect each wire with other wires using the terminal block.
	1. Open the top cover of the terminal block.
 	2. Unscrew the 1st position terminal using a Phillips screwdriver. Insert the ring connector of the Red (positive) wire to the terminal and tighten the screw back into the terminal.
 	3. Unscrew the 3rd position terminal using a Phillips screwdriver. Insert the ring connector of the Black (negative) wire to the terminal and tighten the screw back into the terminal.
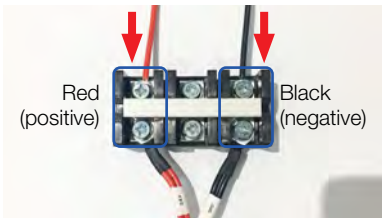	4. Connect wires for distribution to the terminals on the opposite side of each connected wires. **CAUTION**: DO NOT switch positions of the Red (positive) and Black (negative) wires. Switching the polarity of power may damage the product.
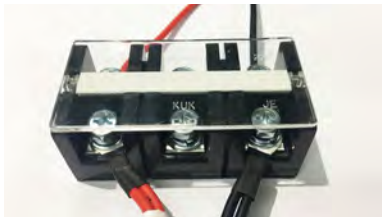	5. Close the top cover of the terminal block.

6.6.4 Connecting BDU to ADU (Antenna)

Intellian provides the Antenna RF Cable (LMR200, 25 m) for connecting ADU and BDU. Connect the **Antenna RF Cable** from the **Antenna** port on the back of the BDU to the RF port on the bottom of radome (Antenna).

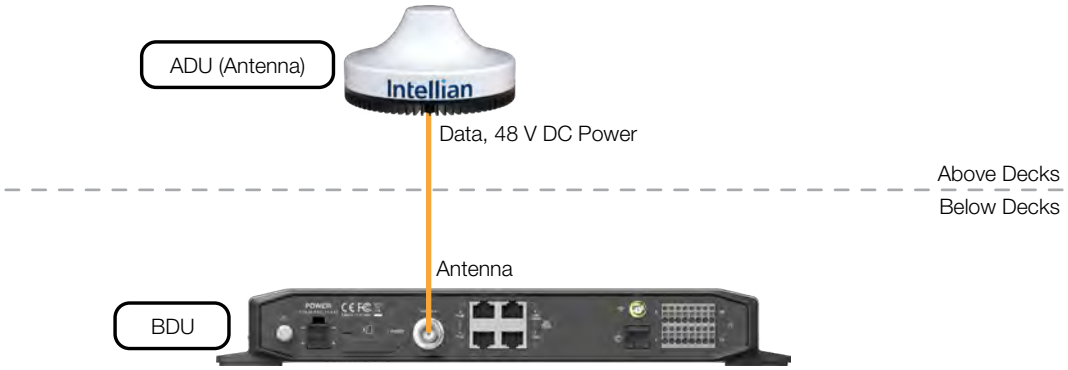

Figure 36: BDU to Antenna Cable Connection

6.6.5 Connecting BDU to Devices using LAN Port (RJ45)

Intellian provides the Ethernet Cable. Connect the **Ethernet Cable** from the **Port 1, Port 2, Port 3, or Port 4** on the back of the BDU to the **LAN** port on the devices such as SIP Phone or Computer. Only the **Port 1** and **Port 2** are LAN port includes Power over Ethernet (PoE).

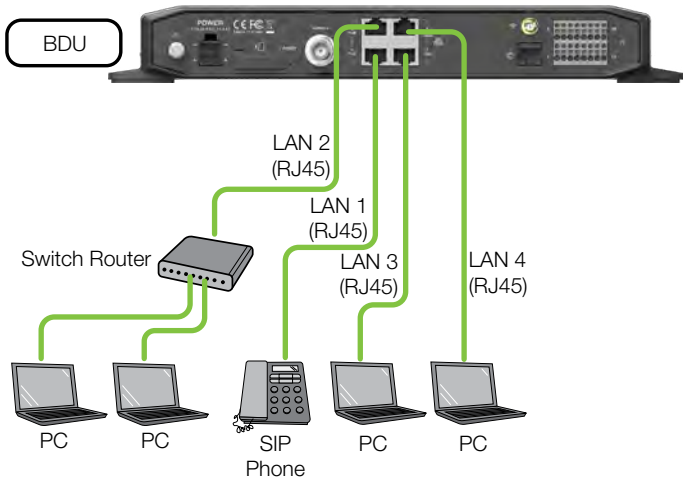

Figure 37: BDU to Devices Cable Connection using LAN Port (RJ45)

6.6.6 Connecting BDU to Device using WAN Port

Intellian provides the Ethernet Cable. Connect the **Ethernet Cable** from the **WAN port** on the back of the BDU to the **RJ-45 port** on the devices such as LTE modem.

Figure 38: BDU to Device Cable Connection using WAN Port

6.6.7 Connecting BDU to POTS Phone (RJ14)

Connect the standard phone cord (customer supplied) from the **POTS Phone port** on the back of the BDU to the **RJ-14 port** on the POTS phone as default.

Figure 39: BDU to POTS Phone (RJ14) Cable Connection

Up to 2 POTS Phones can be connected to the BDU using a RJ14 Cable Splitter (customer supplied). Using a RJ14 Cable Splitter, the two POTS phones can each have a separate phone line (not two phones using the same phone line). The POTS phone 1 (no. 101) is connected to a pair of Pin 3 (R1-) and Pin 4 (T1+) wires. The POTS phone 2 (no. 102) is connected to a pair of Pin 5 (R2-) and Pin 2 (T2+) wires.

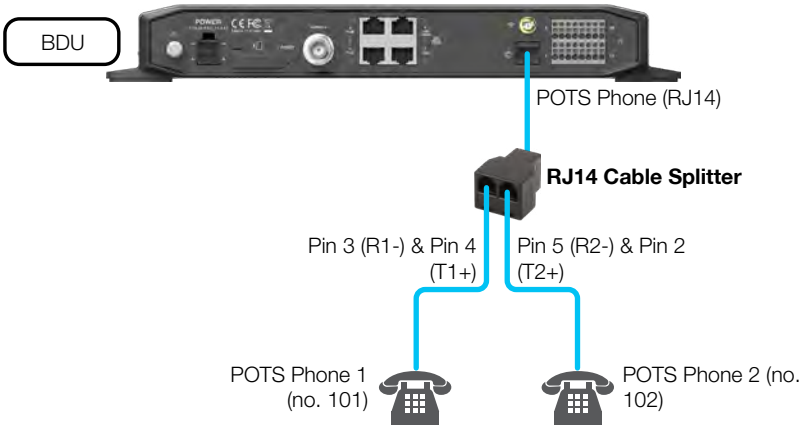

Figure 40: Using Cable Splitter with POTS Phones (RJ14)

6.6.8 Connecting BDU to External Devices

The BDU has a dedicated 16-pin connector to provide a GPIO (General Purpose Input/Output) interface to the external devices. All wires for the GPIO port must use AWG 24 unscreened wire type. Connect the end of these AWG 24 wires to the GPIO port's Pin A (point 1) and Pin B (point 2) respectively.

Figure 41: BDU to External Devices Connection

6.6.9 Connecting Wi-Fi Antenna to BDU

Intellian provides the Wi-Fi Antenna for Wi-Fi connection. Plug the **Wi-Fi Antenna** into the **Wi-Fi** port on the back of the BDU.

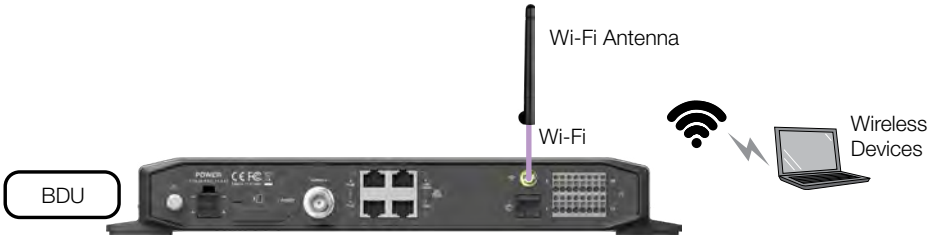

Figure 42: Wi-Fi Antenna to BDU Connection

6.6.10 Grounding Stud

The BDU should be grounded. Use a heavy ground cable (customer supplied) to connect the BDU to the vessel's ground during normal use. A safety grounding system is necessary to protect your radio hardware from lightning strikes and the build-up of static electricity. The grounding system must comply with the safety standards that apply in your country.

Ground the BDU using a heavy ground cable (not included) from the **Grounding Stud** of the BDU back panel to the vessel's ground to protect the system from unwanted surges and voltage differentials.

Figure 43: Grounding Stud Connection

6.6.11 Inserting SIM Card

The system requires a SIM card from the service provider to use the terminal and configure the settings of the BDU.

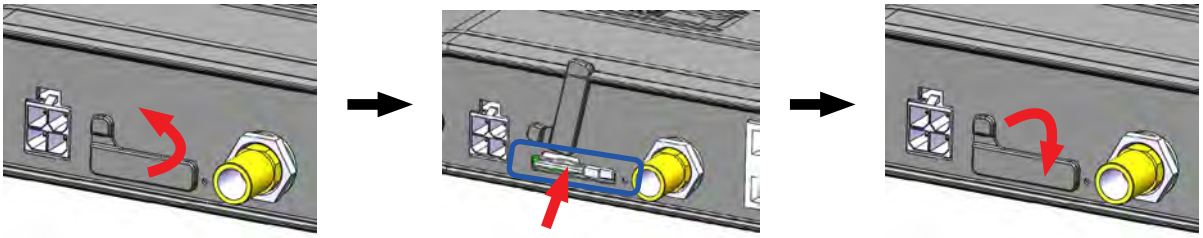

1. Find the SIM card slot on the BDU and open the cover.
2. Insert the SIM card into the slot until it clicks. Face the contact surface down when inserting it.
3. After the SIM Card is placed in the slot, close the cover.

NOTE

If the SIM card is not detected properly (“NO USIM” message is displayed on the dashboard), remove and re-insert the SIM card or turn the BDU power off and on again with the SIM card inserted.

Chapter 7. Operating BDU

The BDU and ADU are connected by a single coaxial cable through which power and Ethernet data are delivered between the BDU and ADU. The BDU is responsible for all the terminal management, system monitoring, control, error detection, and maintenance operations.

7.1 BDU Front Panel

The following figure shows the features on the BDU's front panel.

Figure 44: BDU Front Panel

The following table describes status indicators on the face of BDU.

LED Indicator	Color	Description
Power	Off	The terminal is powered off.
	Blinking	The terminal is booting a system. The terminal is calibrating a system. The terminal is in error. There is no SIM card inside BDU.
	Steady Green	The terminal is powered on.
Satellite	Off	The system is not connected to a satellite.
	Blinking	The system is acquiring a satellite. The system is searching for a satellite.
	Steady Green	The system is connected to a satellite.
Event	Off	The system has no event (call or data).
	Blinking	The system has an alert, an unread message, an incoming call.
	Steady Green	The system has a voice or data.

NOTE: When 3 LEDs blink simultaneously, the BDU is in a low power state. Check the current input voltage status.

7.2 Powering on System

Use the power ON/OFF button on the BDU's front panel. Wait for all LED indicators to turn green to indicate the system is completely powered up.

7.3 Enabling PoE

To use PoE, you need to enable in the terminal. Only the LAN Port 1 and LAN Port 2 of BDU are Power over Ethernet (PoE) capable.

The network is automatically configured by DHCP without the need for additional PC or device IP configuration.

1. Connect an Ethernet cable from the **LAN Port 1** or **LAN Port 2** on the back of the BDU to devices. The network connection is established automatically.
2. Use the following IP address to access the Intellian AptusLX Web page.

- **IP Address: 192.168.200.1 (Default)**

3. Log in to the AptusLX Web by typing in a user name and password information. If this system has not been changed from the factory default:

- **User Name: intellian**
- **Password: 12345678**

4. Select the **SETUP** on the main menu then go to the **Network ➔ Port** menu.
5. Toggle PoE button to the ON position on the port 1 or port 2. If you don't want to use PoE connection, choose the OFF position.
   NOTE: The LAN port 3 and LAN port 4 are not available for C200M model.
6. Select the **LAN** from the **Port Type** drop-down list.
7. Click the **Apply** button to apply the settings to the system.

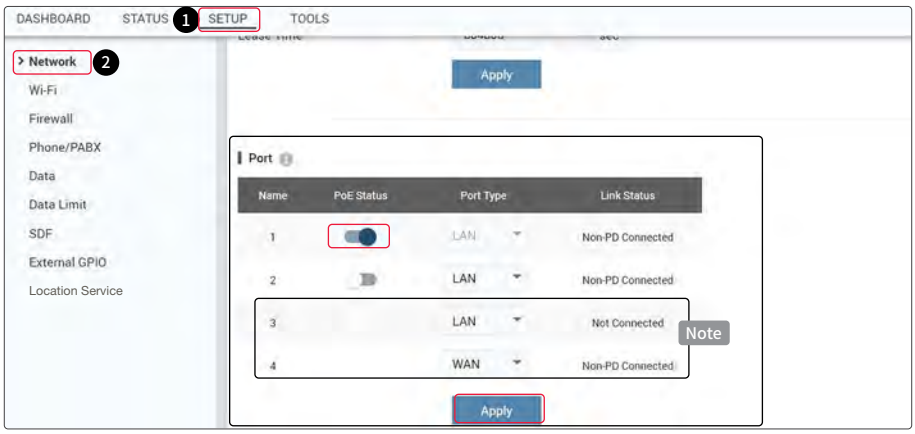

NOTE

Users can check the Link Status (PoE) following messages;

Not Connected: No device is connected to the BDU.

PD connected: A device that uses PoE is connected to the BDU.

Non-PD connected: A device that does not use PoE is connected to the BDU.

7.4 Registering Phones to Make / Receive Calls

When both Power and Satellite LED indicators of the terminal turn steady Green, you are ready to make or receive the first call.

7.4.1 Checking Active Voice Lines

Before registering phones, go to **STATUS ➔ SIM ➔ Voice** and check the activation status of voice lines and their MSISND numbers on the SIM configuration page.

- The activation status of each line (Line 1~ Line 3) is indicated as Active (ready to use) or Inactive (unable to use).
- Each line (Line 1~ Line 3) has its own MSISND number to use for making and receiving calls.

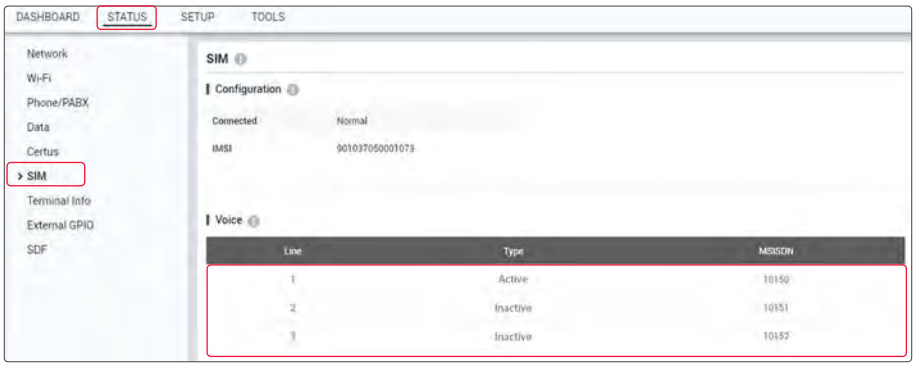

7.4.2 Registering Phones with Extension Number

You can register up to 16 phones by assigning a unique extension number between 201 and 216 to each phone.

1. To register a phone with a local extension number, go to **SETUP ➔ Phone/PABX**.
2. To add a new phone with an extension number, click the **Add**(+) button.
3. On the pop-up window, enter a new extension number and select Inbound and Outbound lines.

NOTE: Check the active voice lines and their MSISND numbers before set up the Inbound and Outbound lines for the extension.

- Extension: Assign an extension number between 201 and 216 to the phone. The extension number cannot be duplicated.
- Inbound Line: Select all the lines of incoming calls to be received by the extension.
- Outbound Line: Select a line of outgoing calls to be made by the extension.

Password: Enter a password for security (4~8 characters, any combination of letters, numbers, or special characters).

4. Click the **Update** button to save.

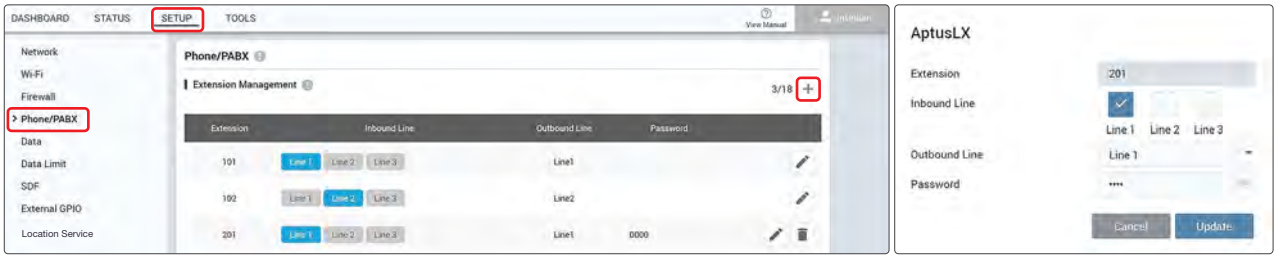

7.4.3 Making Local Phone Call

To make a local call between phones connected to the terminal, dial a registered extension number (201 ~ 216) of each phone.

NOTE: For POTS phone, extension 101 and 102 are already assigned.

7.4.4 Making Phone Call

You can make a call from a registered phone. The outgoing call is made with the MSISDN number of outbound line assigned for the phone.

- For POTS, it's 00 + Country Code + Phone number using the keypad.
- For VOIP, it's 00 + Country Code + Phone number + # using the keypad.

NOTE: You can set the outbound call prefix. Refer to the "8.8.4 Phone/PABX" on page 81.

7.4.5 Receiving Phone Call

You receive a call with a registered phone. The phone receives incoming calls of the MSISDN number through the inbound line which are assigned for the phone. If two or more inbound lines are assigned to one extension number, incoming calls of all inbound lines are received by one phone with the extension.

7.5 Using Grandstream VoIP Phone Call

Use the Grandstream VoIP phone to make VoIP phone calls.

Recommended VoIP Phones

- Grandstream GXP16 Series: 1610, 1615, 1620, 1625, 1628, 1630
- Grandstream GXP17 Series: 1760, 1780
- Grandstream GXP21 Series: 2120, 2130, 2135, 2140, 2160, 2170
- Grandstream GXV32 Series: 3240, 3275

1. Connect an Ethernet Cable from a LAN port (**Port 1~ Port 4**) on the back of the BDU to a LAN port of devices. Only the **LAN Port 1** and **Port 2** of BDU are Power over Ethernet (PoE) capable.

2. On the front LCD panel of the phone, go to Menu > Status > Network Status. Note the IP address for IPv4 accessing the web interface of the VoIP phone.
   For example, IP address 192.168.200.132 is displayed on the LCD panel.

3. On your laptop, open a web browser and type in the IP address for IPv4 (http://192.168.200.132). Log into the web interface of the VoIP phone using the user name and password.

- **Login Username: admin**
- **Password: admin**

4. Go to **Account** > **Account 1** > **General Settings**.

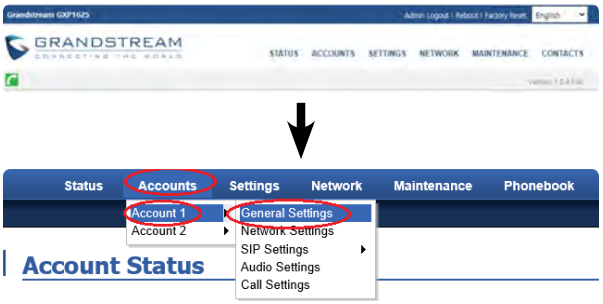

5. According to the AptusLX setting, enter the values for General Settings.

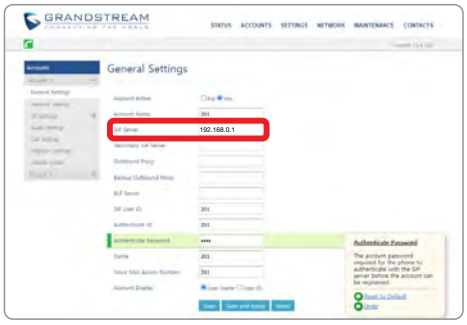

or

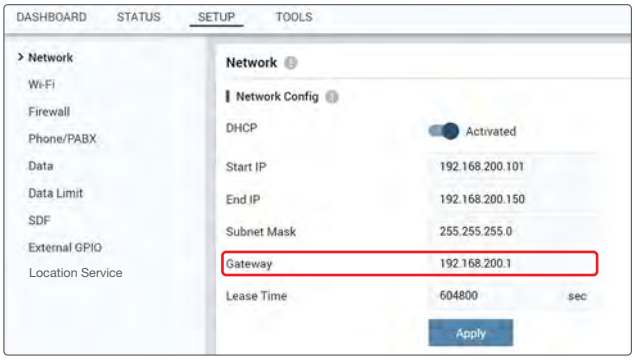

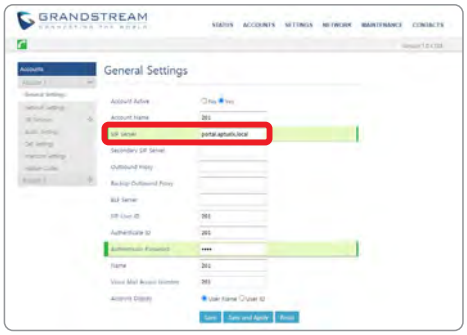

AptusLX

Enter the values according to the AptusLX setting (**SETUP** > **Network**).

VoIP Phone

The engineer needs to remember the default IP for BDU **192.168.200.1** or can simply input '**portal. aptuslx.local**'.

Need to input IP into SIP Server on GRANDSTREAM SIP Server IP.

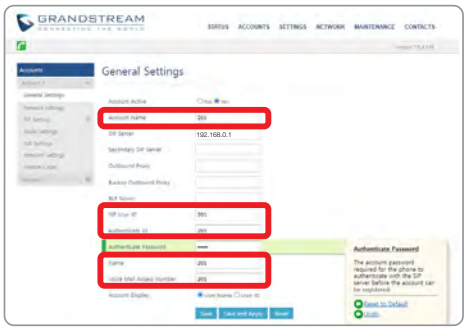

AptusLX

Extension 10X (ex.101,102) is used for analog phones. For VoIP phones, used Extension **20X** to assign desired number. To create new extension numbers, click the **Add**(+) button. Then the pop-up window is opened.

VoIP Phone

Input values for **Account name** / **SIP User ID** / **Authenticate ID** / **Name** / **Voice Mail Access Number** according to the AptusLX setting.

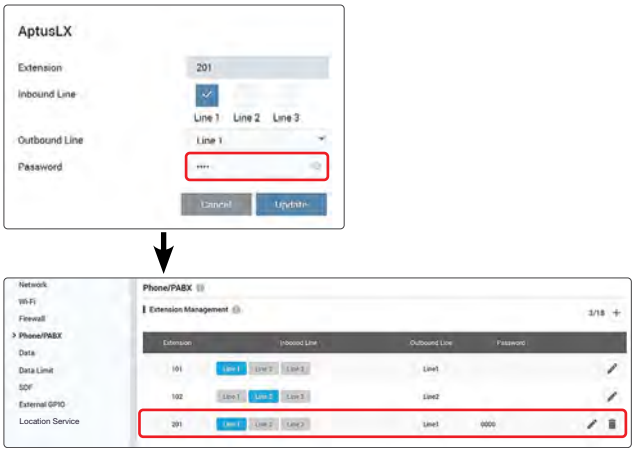

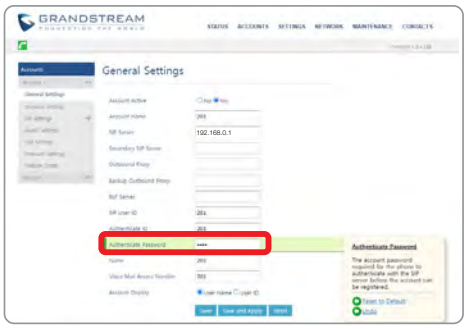

AptusLX

Assign the **Password** for Inbound Line / Outbound Line according to the vessel's purpose to assigned phone location.

The created extension numbers are displayed on the list.

VoIP Phone

The **password** should be the same for AptusLX and VoIP Phone.

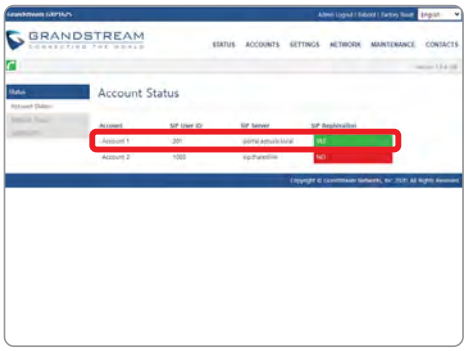

AptusLX

Go to **STATUS** > **SIM** to check the phone number of Line 1, and try to make inbound and outbound calls for confirmation.

VoIP Phone

Check Account Status for SIM Server Registration to make sure the VoIP phone is configured correctly.

7.6 Using Wireless Devices through Wi-Fi

You can connect to the BDU via Wi-Fi for easy management and control whenever you are on the vessel.

1. Bring the Wi-Fi Antenna located in the BDU package. Plug the Wi-Fi Antenna into the Wi-Fi port on the back of the BDU.
2. Connect an Ethernet cable from any LAN ports (**Port 1~ Port 4**) on the back of the BDU to the LAN port of PC. The network connection is established automatically.
3. Use the following IP address to access the Intellian AptusLX Web page.

- **IP Address: 192.168.200.1 (Default)**

4. Log in to the AptusLX Web by typing in a user name and password information. If this system has not been changed from the factory default:

- **User Name: intellian**
- **Password: 12345678**

5. Select the **SETUP** on the main menu then go to the **Wi-Fi ➔ Wi-Fi Config** menu.
6. Toggle Activation button to the **Enabled** position on the **Activate**. If you don't want to use Wi-Fi Connection, choose the **Disable** position.
7. Check the **SSID (Wi-Fi AP Name)** information.
8. Choose the SSID Broadcast **Enabled** button to show the SSID (Wi-Fi AP Name) on the Wi-Fi list.
9. Click the **Password protected** button on the **Mode** menu.
   NOTE: Password protection uses WPA2 protocol.
10. Set a Wi-Fi password on the **Passphress** menu.
11. Click the **Apply** button to apply the settings to the system.
12. Connect to the Wi-Fi.

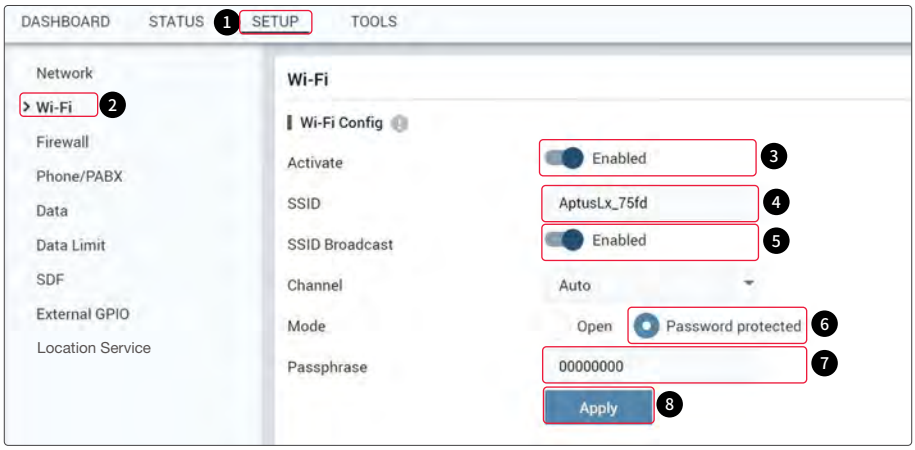

7.7 Using Mobile Phone Call

7.7.1 Installing Mobile Application

To be able to use a mobile phone call you must install a compatible mobile application. Intellian recommends using the following mobile application:

Grandstream Wave App

- **App Store:** https://apps.apple.com/us/app/grandstream-wave/id1029274043?ls=1
- **Google Play:** https://play.google.com/store/apps/details?id=com.grandstream.wave

7.7.2 Registering New Extension for Voice Service (Optional)

If voice services are required, register the new extension of the terminal.

1. Select the **SETUP** on the main menu then go to the **Phone/PABX** menu.
2. To add a new extension, click the **Add**(+) button.

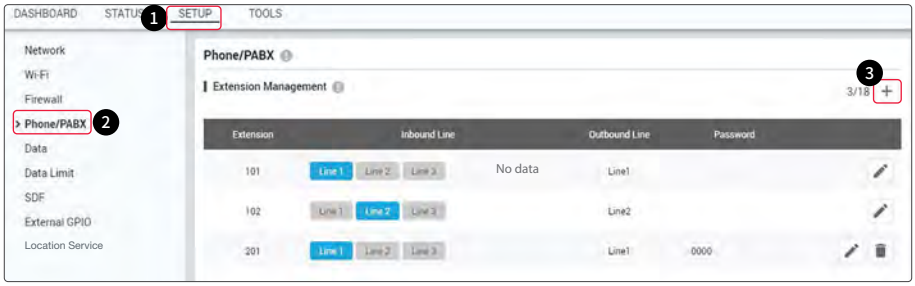

3. The registration window will appear in the pop-up window. Enter the new extension information. When you want to use the external call, select the **Inbound Line** and **Outbound Line** after checking the **Active** line on the **SIM** menu of the **STATUS** menu for proper line assignment. Click the **Update** button.

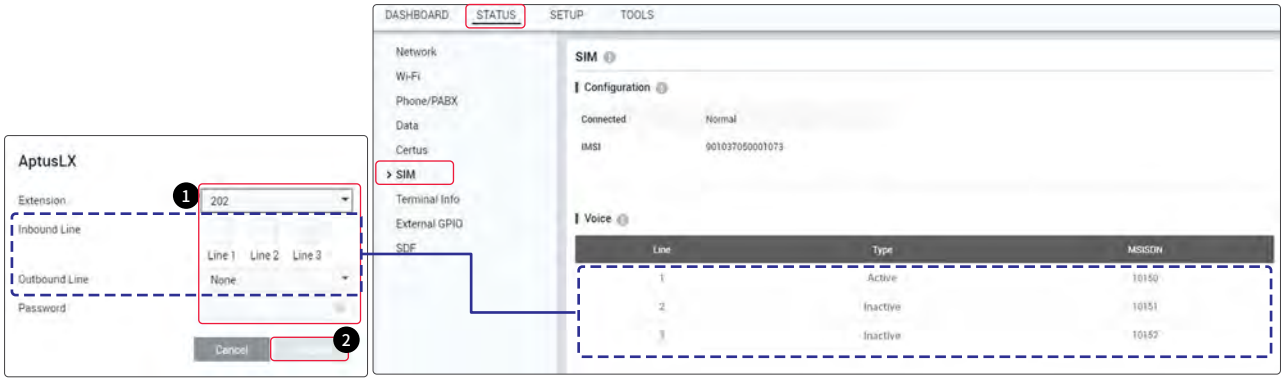

4. Check the new extension added.

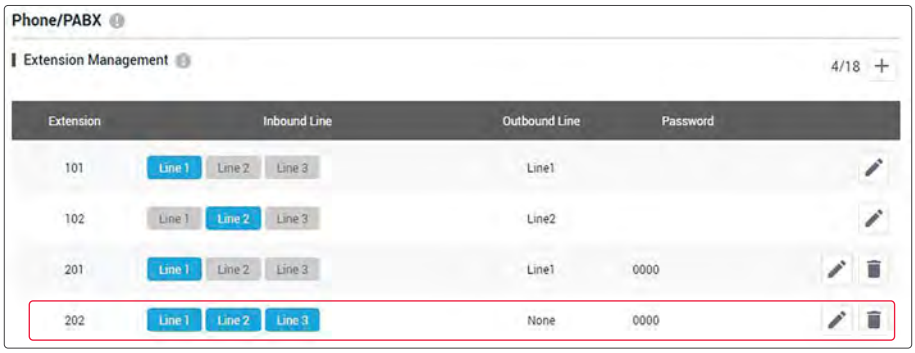

7.7.3 Setting Mobile Phone

Using Grandstream Wave App (Recommended) through Mobile Phone

To make a call on your mobile phone, Intellian recommends using the Grandstream Wave app. Follow the steps below to set up your mobile phone.

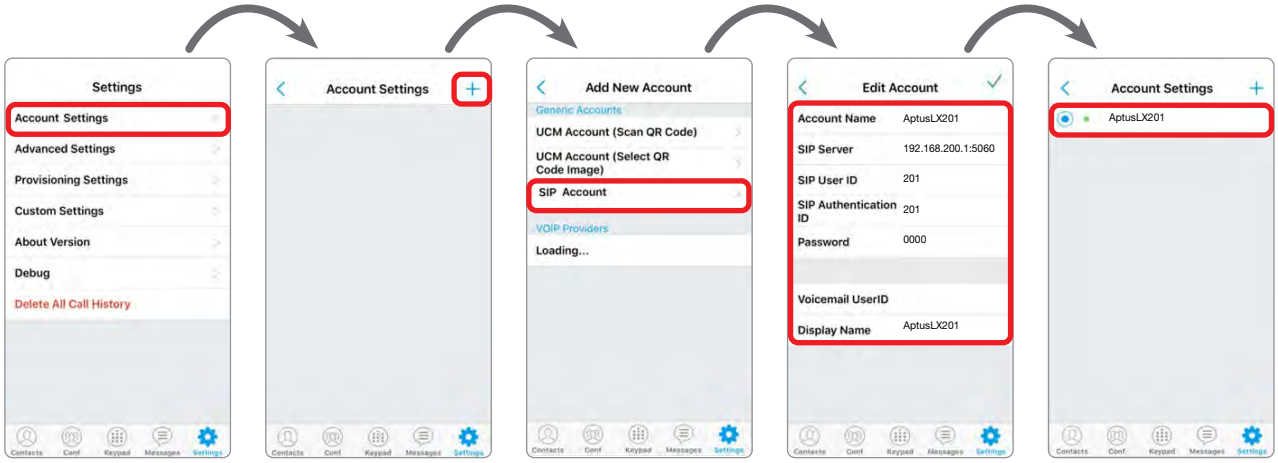

7.8 How to Access Terminal Remotely

To control the terminal remotely, the terminal must be powered up and connected to the satellite services.

1. Connect an Ethernet cable from a LAN port (**Port 1~ Port 3**) on the back of the BDU to a LAN port of PC. The network connection is established automatically.
2. Use the following IP address to access the Intellian AptusLX Web page.

- **IP Address: 192.168.200.1 (Default)**

3. Log into the AptusLX Web by typing in a user name and password information. If this system has not been changed from the factory default:

- **User Name: intellian**
- **Password: 12345678**

4. Go to **SETUP ➔ Data ➔ Port/Protocol Forwarding**.
5. Click the **+ button** to add a new port.

6. Enable remote access to the terminal through the Satellite or WAN Connection.

NOTE: To use the Satellite Connection, you need to get firewall permission from Iridium.

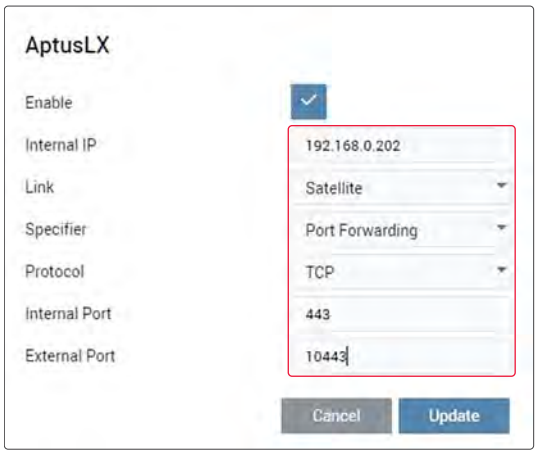

Internal IP	**192.168.0.202**
Link	Satellite Connection: **Satellite** WAN Connection: **WAN**
Specifier	**Port Forwarding**
Protocol	**TCP**
Internal Port	**443**
External Port	Satellite Connection: For an external connection by user, set the port number between 10000 and 20000 (e.g.10443). WAN Connection: **10443 (Default)**

7. Enter the following IP address for remote access.

- For the Satellite Connection, contact Iridium for the accessible IP information.
- For the WAN Connection, go to **STATUS ➔ Network ➔ WAN Status** and find **IP address assigned to WAN.**

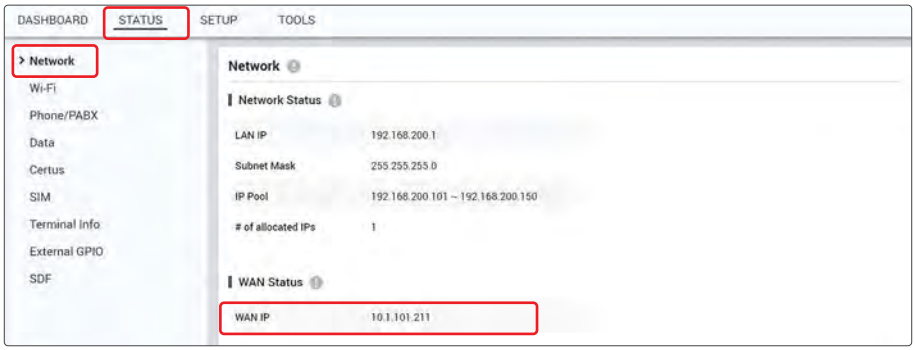

Chapter 8. Using AptusLX

8.1 Introduction

With the embedded **AptusLX** software, the antenna can be monitored, controlled, and diagnosed remotely, anytime through the TCP/IP protocol. This saves you the time and cost generated by various maintenance activities, such as upgrading firmware, tracking parameter resets, and diagnosing system issues.

8.2 Accessing Internal Webpage of BDU

The network is automatically configured by DHCP with no additional PC IP configuration.

1. Connect an Ethernet cable from any LAN ports (**Port 1~ Port 4**) on the back of the BDU to the LAN port of PC. The network connection is established automatically.
2. Enter the BDU IP address (Default: 192.168.200.1) or (https://portal.aptuslx.local) into the address bar of the web browser to login to the internal HTML page of BDU.

NOTE

AptusLX works on Internet Explorer 11 or higher (Windows 7 or higher editions), Firefox, Microsoft Edge and Chrome web browsers.

If you cannot open AptusLX on Chrome, clear all browsing data (history, cookies, cache, and more) in Chrome's setting and try again.

8.3 Login

The Intellian software Aptus provides different user access levels to protect the system for safe operation. Depending on the user level, the accessible functions in the software may be limited (see the table below).

Log into the BDU by typing in a User Name and Password information. If this system has not been changed from the factory default:

User ID	Password	Access Authority
intellian	12345678	Supports all menus for monitoring and setting.
guest	guest	Only some menus for monitoring are supported.

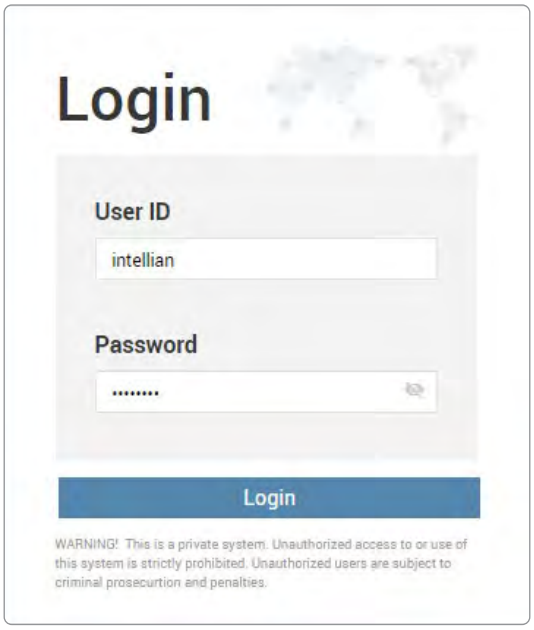

NOTE

After entering the default password, the user must change the default password to a new password for security. If you have forgotten your ID and/or password, you can reset it on the Reset ID/Password menu. Refer to the "8.5 Account Menu" on page 62.

8.4 Top Menus

Once you log in, the following information and menus are displayed. The overall state of the system is always displayed in the system status field.

No.	Item	Description
①	Satellite Status	Displays the status of the satellite network connection. • Off: The system has not detected the Satellite network. • Steady Green: The Satellite Network available, ready to connect. • Blinking Green (Acquiring): The system is connecting to the satellite network. • Steady Blue: The system is registered and connected to the satellite network. • Steady Red: Registration on the network was denied. If the SIM card is inserted incorrectly, insert the SIM card in place. Refer to the "6.6.11 Inserting SIM Card" on page 46. If there is no error with the SIM card status, contact the service provider.
②	WAN Status	Displays the status of the wide-area network (WAN) connection. The system connects to the WAN according to the setting of the routing policy. You can also check the status of the WAN connection on the 'Current Route Selection' panel of the "8.6 Dashboard" on page 64. • Steady Blue: The WAN is connected. • Red/Off: The WAN is not connected.
③	Wi-Fi Status	Displays the status of the Wi-Fi connection. • Off: The Wi-Fi connection is disabled. • Steady Green: The Wi-Fi connection is enabled. Ready to connect. • Steady Blue: The Wi-Fi is connected.
④	Signal Strength	Displays the current signal level. • Off: The network is disabled. • Steady Green: The network is enabled. Displays the current signal level.
⑤	System Power	Displays the current system power. • Steady Blue: The system is in normal operation. • Steady Red: A error is detected.
⑥	Call	Displays the status of the call connection. • Steady Green: The extension call is available. • Steady Blue: The extension and external call is available. • Blinking Blue: The external call is active.
⑦	Main Menu	Select a main menu item. Each main menu item displays side menus on the left of the screen.
⑧	View Manual Button	Select the **View Manual** button to open the user guide pop-up window.
⑨	Account Button	Select the **Intellian** button to manage your account details and select the **Logout** menu to log out of the AptusLX web page.

8.5 Account Menu

Click the **Intellian** button to manage the user account.

The **User** menus are for user management. Click the **Logout** button to log- out of the AptusLX web page.

8.5.1 User

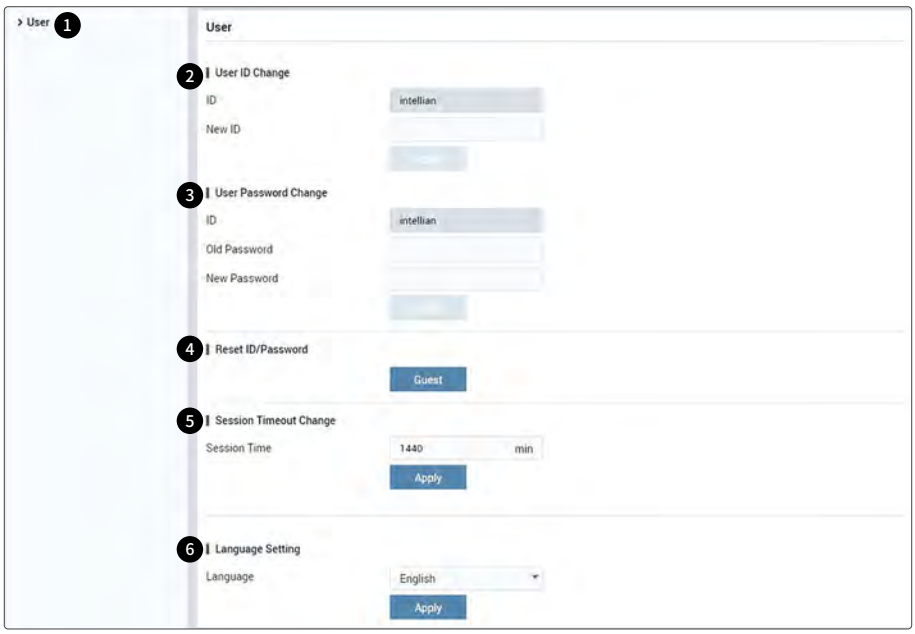

No.	Item	Description
①	User	Updates your password and ID.
②	User ID Change	You can change your password. • ID: Displays the user current ID. • New ID: Enter the new ID you want to change. Click the **Apply** button to set the ID to the new ID.
③	User Password Change	You can change your password. • ID: Displays the user current ID. • Old Password: Enter the current password. • New Password: Enter the new password. Click the **Apply** button to set the password to the new password. For the next login, the new password is required.

No.	Item	Description
④	Reset ID/ Password	If you have forgotten your ID and/or password, you can reset depending on your account level. The **intellian** account allows you to reset the **guest** account. Click the account button to reset to the default id and password. For the next login, the default id and password are required.
⑤	Session Timeout Change	Enter the session timeout (min.). Click the **Apply** button to apply the settings to the system.
⑥	Language Setting	You can change the language. Select the language you want to change and click the **Apply** button to apply the settings to the system. Log in again after changing the language.

8.5.2 Logout

Click the **Logout** button to log out from the AptusLX.

8.6 Dashboard

The Dashboard menu item provides access to quick monitoring of the antenna status. Once displayed, the Dashboard helps you arrange panels on a single screen, while providing you with a broad view of a variety of information at once.

NOTE

You can check the status of the WAN connection on the Service panel and at the right of the top menu.

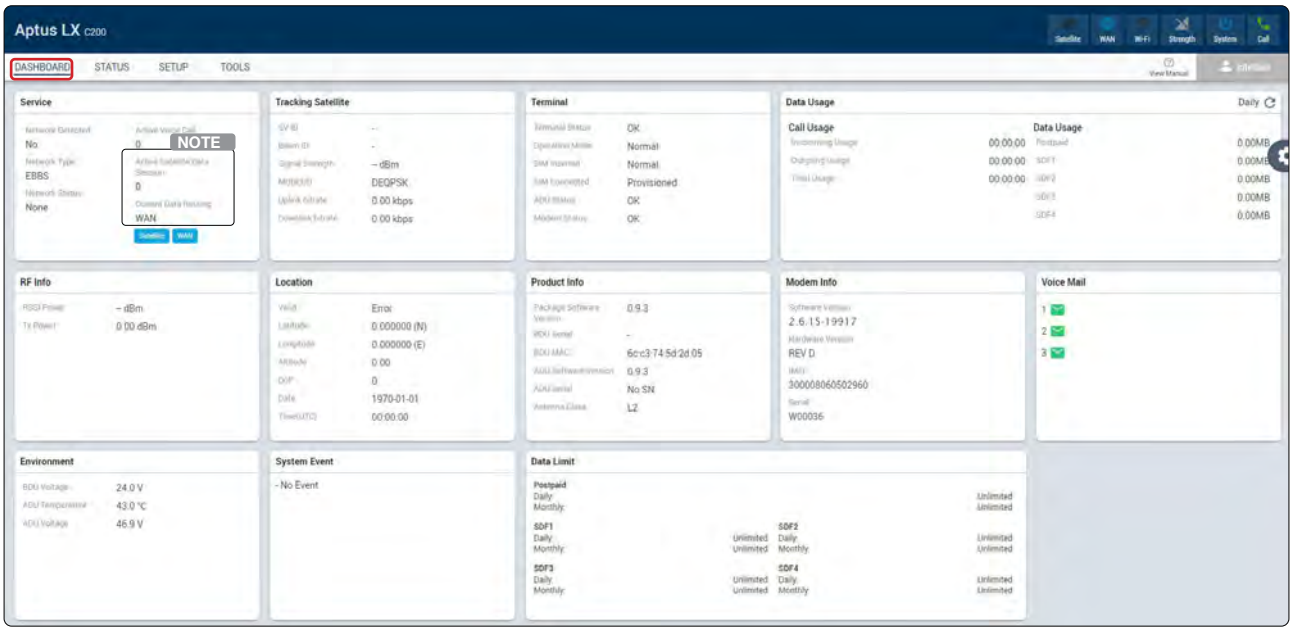

8.6.1 How to Add & Remove Panels (Dashboard Setting)

Adding Panels

1. Click the gear icon on the right side of the page (see figure below). The Dashboard Setting window displays.
2. Check the box of the panel that you wish to add to the dashboard.
3. Click the **Confirm** button to apply the settings to the system.
4. Once the panel is added, it will be automatically placed at the bottom of the page.

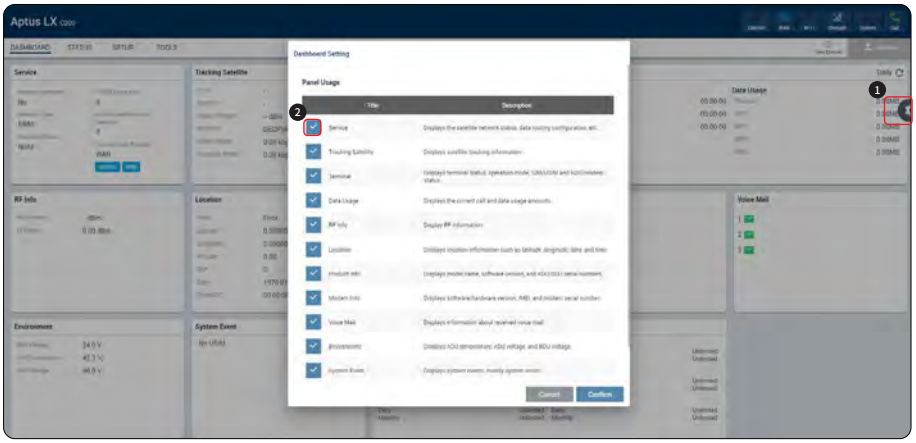

Removing Panels

1. Click the gear icon on the right side of the page (see figure below). The Dashboard Setting window displays.
2. Uncheck the box of the panel that you wish to remove from the dashboard.
3. Click the **Confirm** button to apply the settings to the system.

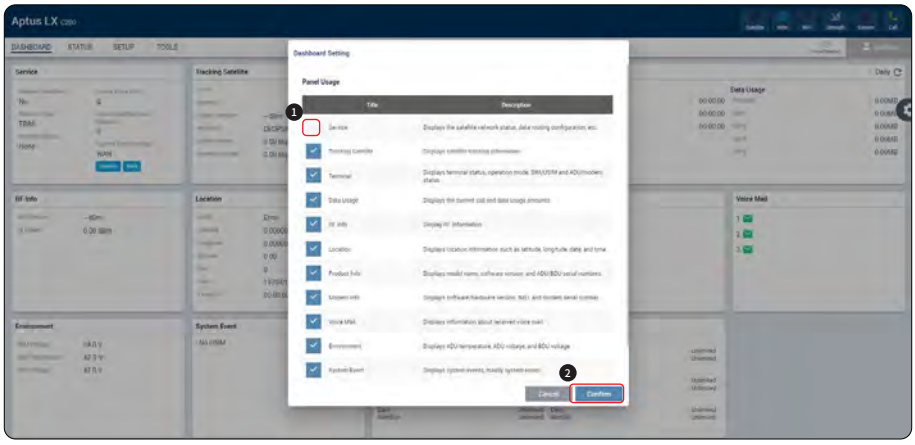

8.7 Status

This menu displays the Network, Wi-Fi, Phone/PBX, Data, Certus, SIM, Terminal Info, External GPIO, and SDF function.

8.7.1 Network

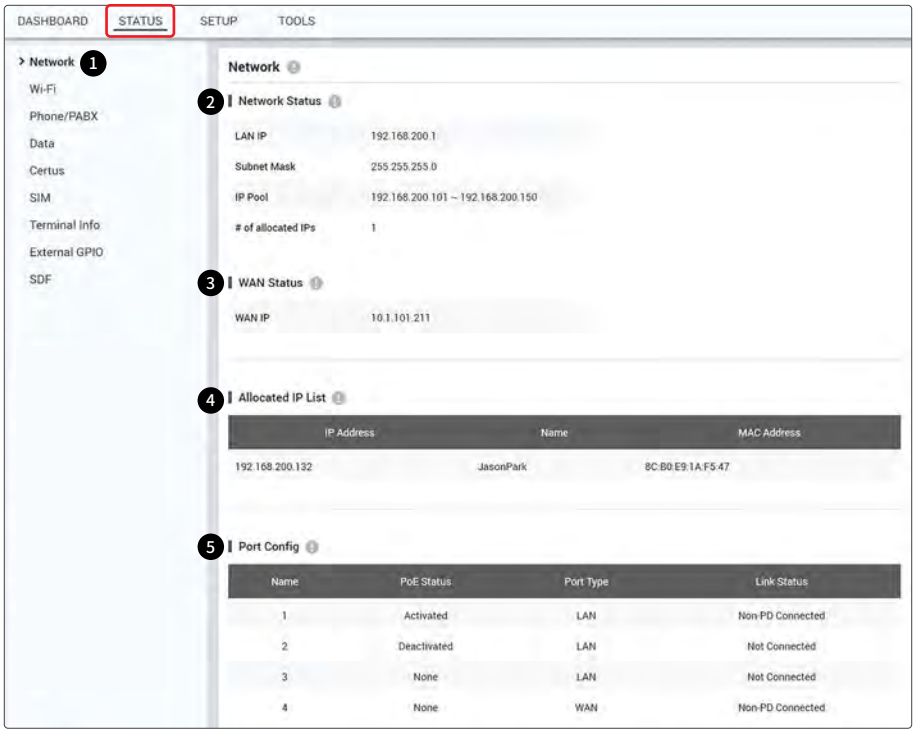

No.	Item	Description
①	Network	Displays the information about a network and ports.
②	Network Status	Displays the network information in use. • LAN IP: Displays the network IP address (Factory default: 192.168.200.1). • Subnet Mask: Displays the subnet mask (Factory default: 255.255.255.0). • IP Pool: Displays the range of available IP. • # of allocated IP: Displays the number of IP devices assigned.
③	WAN Status	Displays the WAN information in use. • WAN IP: Displays the WAN IP address.
④	Allocated IP List	Displays the allocated IP list and information.
⑤	Port Config	Displays the switch port list (LAN or WAN port) and information.

8.7.2 Wi-Fi

No.	Item	Description
①	Wi-Fi	Displays Wi-Fi access information.
②	Wi-Fi Status	Displays the Wi-Fi access point configuration. • Status: Displays the Wi-Fi status (Active/Inactive). • SSID: Displays the SSID network name. • MAC Filler: Displays the MAC address filtering status (Enabled/Disable). • SSID Broadcast: Displays the SSID broadcast status (Enabled/Disable). • Channel: Displays the WLAN (wireless local area network) channel in use. • Mode: Displays the security mode (Open/Password procted).
③	MAC Filter	Displays devices to either your whitelist or blacklist simply.

8.7.3 Phone/PABX

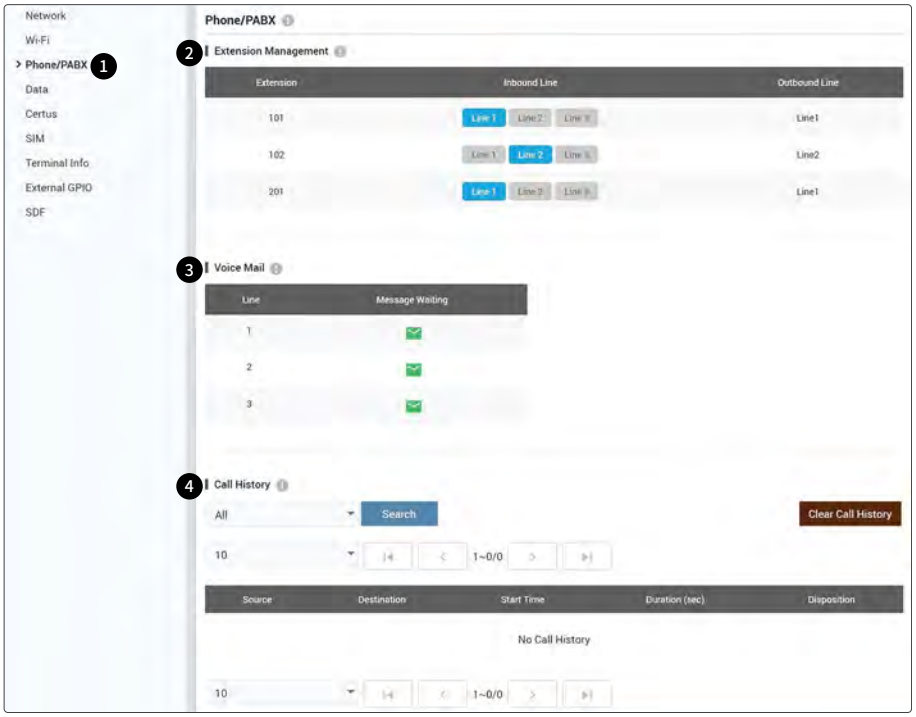

No.	Item	Description
①	Phone/PABX	Displays the phone and Private Automatic Branch Exchange (PABX) status.
②	Extension Management	Displays the extension number and details. • Extension: Displays the registered extension. • Inbound Line: Displays the inbound line in use through the blue indicator. • Outbound Line: Displays the outbound line.
③	Voice Mail	Displays the received new voice mail.
④	Call History	Displays the received call history. You can set view details from the drop-down list. Remove the history by clicking the **Clear Call History** button.

8.7.4 Data

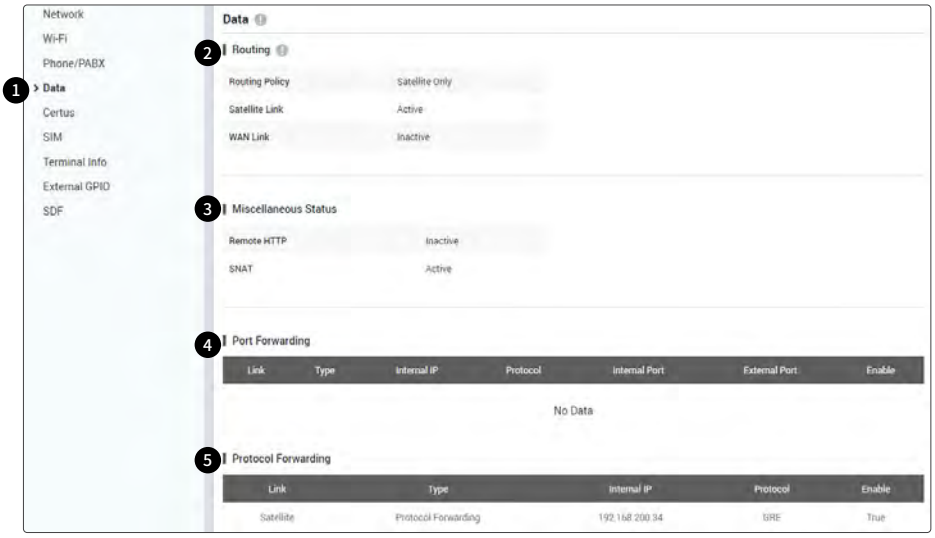

No.	Item	Description
①	Data	Displays the data setting status.
②	Routing	Displays the data route (None, Satellite Only, WAN Only, Satellite Preferred, WAN Preferred) in use.
③	Miscellaneous Status	Displays the Miscellaneous status (Remote HTTP/ SNAT (Source Network Address Translation).
④	Port Forwarding	Displays the port forwarding data information.
⑤	Protocol Forwarding	Displays the protocol forwarding data information.

8.7.5 Certus

No.	Item	Description
①	Certus	Displays the modem state and the satellite information.
②	Service	Displays the modem status. • Network Detected: Displays the network connection status (Yes/No). • Network Type: Displays the network type in use. • Network Status: Displays the network connection status. • Call Sessions: Displays the number of external devices in use.
③	Satellite	Displays the satellite information. • SV ID: Displays the satellite number. • Beam ID: Displays the satellite beam number. • Signal Strength: Displays the signal strength.

8.7.6 SIM

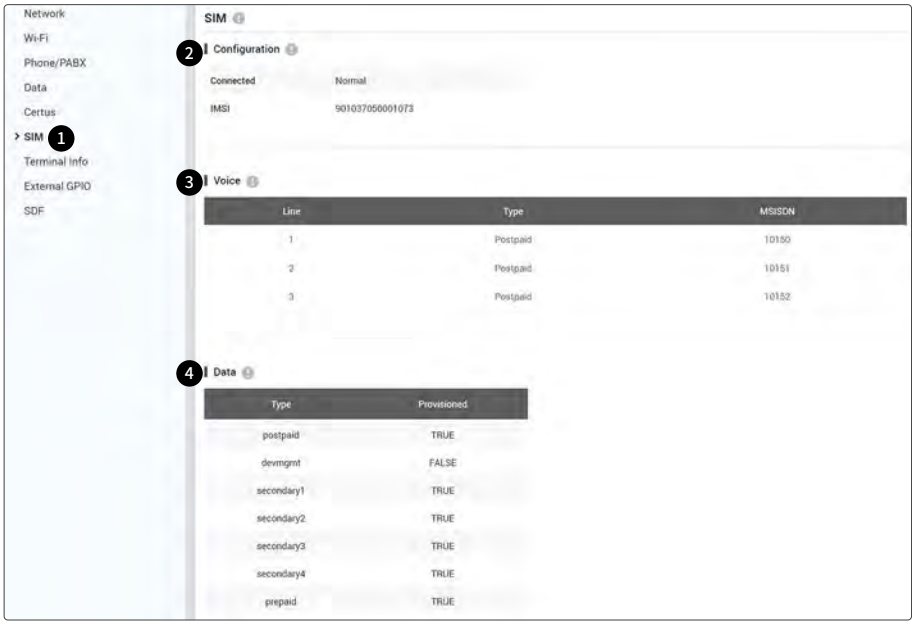

No.	Item	Description
①	SIM	Displays information about the SIM card, and the voice and data status.
②	Configuration	Displays the SIM card information in use. • Connected: Displays the connection status of the SIM card. The SIM must be inserted. • IMSI: Displays a unique identifier to the SIM card.
③	Voice	Displays the active status of the voice.
④	Data	Displays the status of data communications.

8.7.7 Terminal info

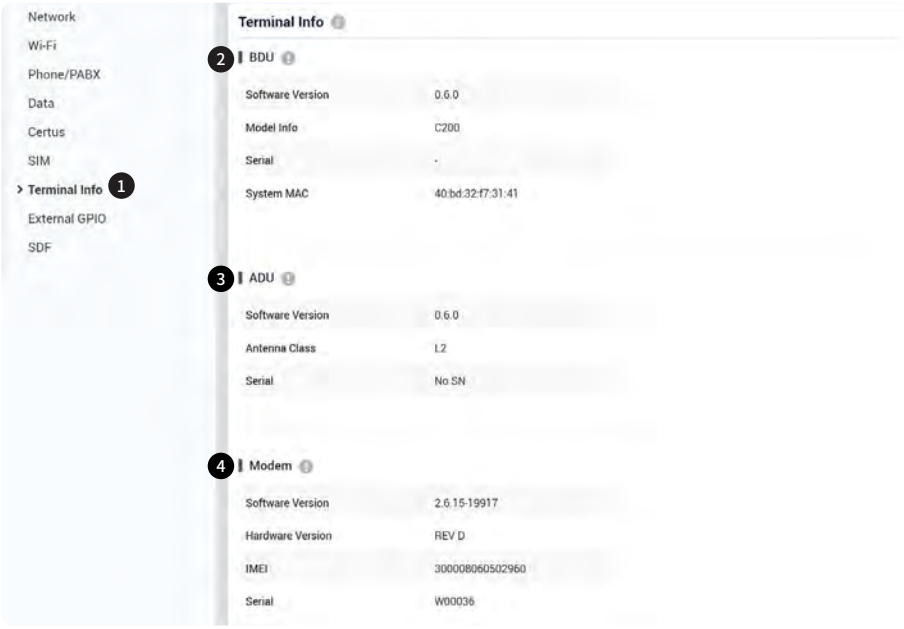

No.	Item	Description
①	Terminal info	Displays the system terminal information.
②	BDU	Displays BDU information in use.
③	ADU	Displays ADU information in use.
④	Modem	Displays the core module information in use.

8.7.8 External GPIO

No.	Item	Description
①	External GPIO	Displays external GPIO status.
②	Inputs	Displays input information in use.
③	Outputs	Displays output information in use.

8.7.9 SDF

No.	Item	Description
①	SDF	This menu is for service providers. Displays Secondary Data Flow (SDF) information.
②	SDF Config	Displays the IP address assigned to the SDF.

8.8 Setup

This menu sets and displays the Network, Wi-Fi, Firewall, Phone/PBX, Data, SDF, and External GPIO function.

8.8.1 Network

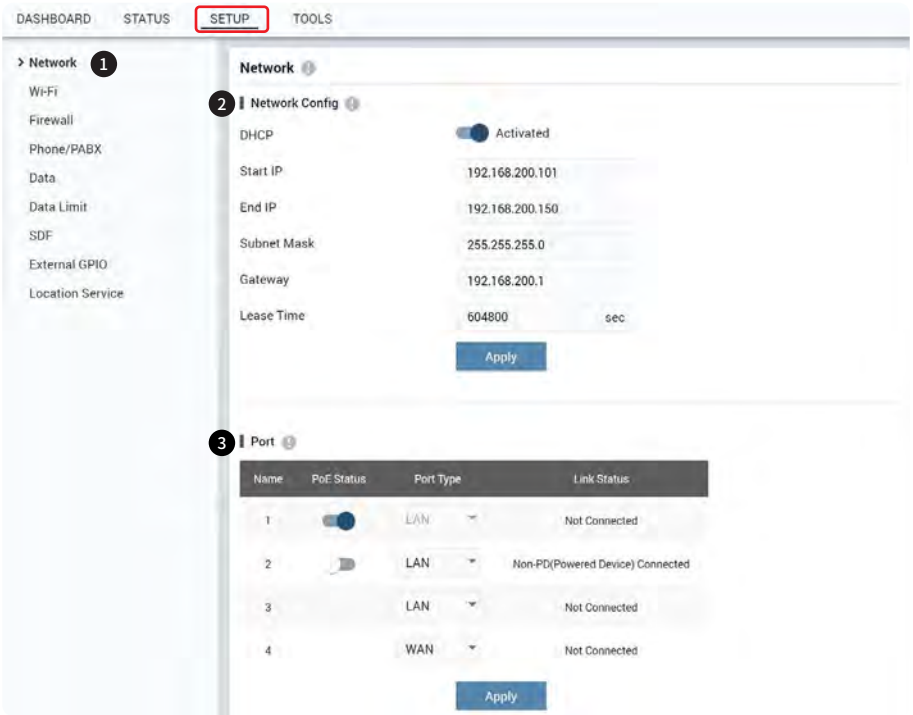

No.	Item	Description
①	Network	Sets the information about a network and ports.
②	Network Config	Sets the network configuration. • DHCP: Sets the DHCP function by toggling the activation button (Activated/ Deactivated). • Start IP: Sets the start range of lease IP address. • End IP: Sets the end range of lease IP address. • Subnet Mask: Sets the subnet mask (Factory default: 255.255.255.0). • Gateway: Sets the gateway IP address. • Lease Time: Sets the lease time (sec). Click the **Apply** button to apply the settings to the system.
③	Port	Sets each switch port. • Name: Displays the port mane (port 1, 2, 3, and 4). • PoE Status: Sets the PoE function by toggling the activation button on port 1 and 2. • Port Type: The port 1 is fixed for LAN. The port 4 can be selected as LAN, SDF, or WAN from the drop-down list. Port 2 and 3 can be selected as LAN or SDF from the drop-down list. • Link Status: Displays the link status (Up/Down). Click the **Apply** button to apply the settings to the system.

8.8.2 Wi-Fi

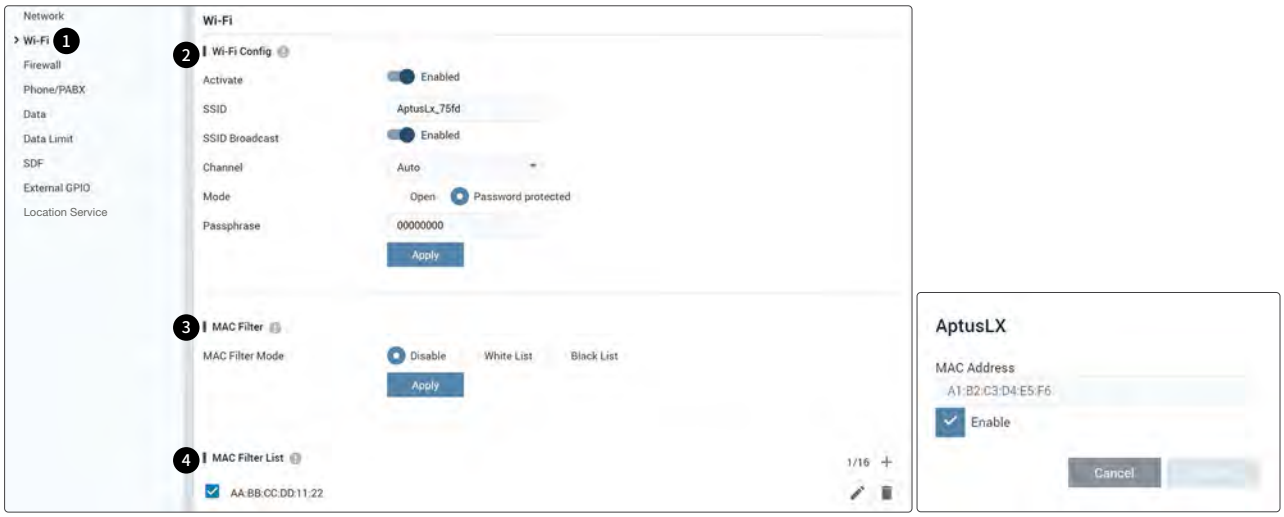

No.	Item	Description
①	Wi-Fi	Sets the Wi-Fi access information.
②	Wi-Fi Config	Sets the Wi-Fi access point configuration. • Activate: Sets the Wi-Fi function by toggling the activation button (Enabled/Disabled). • SSID: The SSID is the name that allows devices to identify and connect to the wireless network. The SSID is case-sensitive and must not exceed 32 alphanumeric characters, and it can be any keyboard character. The SSID is the same for all devices that connect to your wireless network. • SSID Broadcast: Sets the SSID broadcast function by toggling the activation button (Enabled/Disabled). • Channel: Selects an appropriate channel from the list provided to correspond with your network settings. All devices that connect to your wireless network will use the same channel automatically. Try to avoid conflicts with other wireless networks by choosing a channel where the upper and lower three channels are not in use. • Mode: Sets the security mode type (Open/Password protected). If you use the Password protected (WPA2) mode, you must enter a Passphrase below. Each user will have to enter the passphrase to join the network before gaining access to the login page of AptusLX. • Passphrase: Enter the password required to connect to Wi-Fi. Click the **Apply** button to apply the settings to the system.
③	MAC Filter	Select the MAC filter mode (Disable/White List/Black List). • Disable: The MAC filter is disabled. • White List: In Whitelist mode, the router will restrict LAN access to all computers except those contained in the "MAC Address" menu. • Black List: In Blacklist mode, the listed devices are completely blocked from local network access. Click the **Apply** button to apply the settings to the system. **NOTE**: Use caution when using the MAC Filter to avoid accidentally blocking yourself from accessing the router.

No.	Item	Description
④	MAC Filter List	Displays the MAC address. To create new MAC addresses, click the plus icon. Then the pop-up window is opened. You can assign the new MAC address. Click the **Create** button. The created MAC addresses display on the list.

8.8.3 Firewall

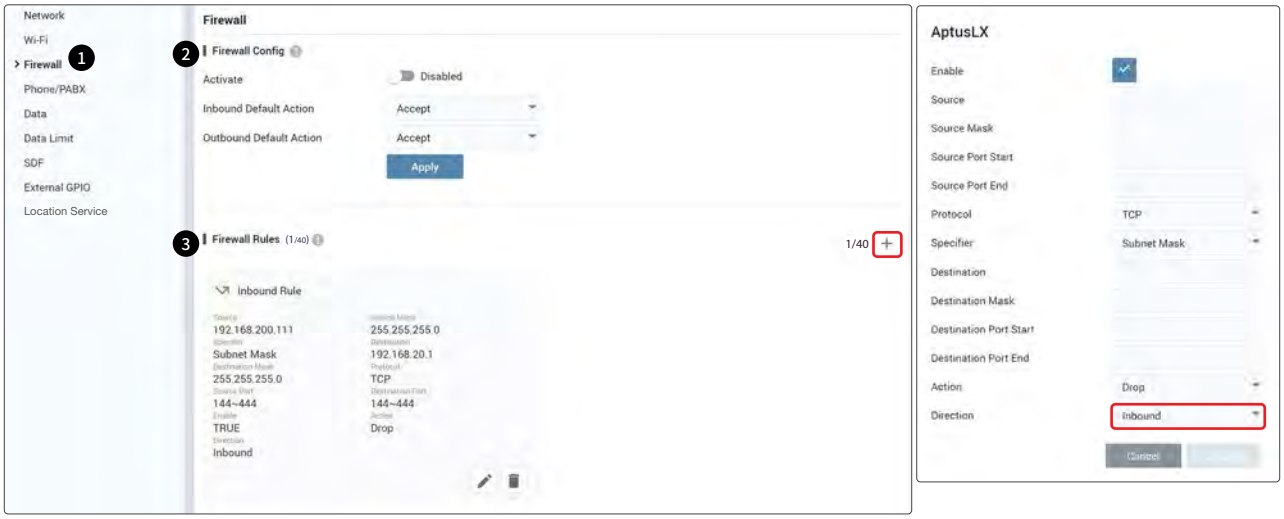

No.	Item	Description
①	Firewall	Sets the firewall, network security system, which monitors and controls incoming and outgoing network traffic based on predetermined security rules.
②	Firewall Config	Sets the firewall configuration. • Activate: Sets the firewall function by toggling the activation button (Enabled/ Disabled). • Inbound Default Action: Select the default settings for the incoming network from the drop-down list (Accept/Drop). • Outbound Default Action: Select the default settings for the outgoing network from the drop-down list (Accept/Drop). Click the **Apply** button to apply the settings to the system.
③	Firewall Rules	Displays firewall rule lists. • **Add**(+) button: To create new firewall rules, click the plus icon. Then the pop-up window is opened. Click the **Update** button. The created firewall rules are displayed on the list. - Enable: Select the checkbox to use the firewall rule. - Source: Enter the origin IP address. - Source Mask: Enter the source mask. - Source Port Start: Enter the source mask start. - Source Port End: Enter the source mask end. - Protocol: Select the protocol from the drop-down list. - Specifier: Select the Specifier from the drop-down list. - Destination: Enter the destination IP address. - Destination Mask: Enter the destination mask. - Destination Port Start: Enter the destination mask start. - Destination Port End: Enter the destination mask end. - Action: Select the action from the drop-down list. - Direction: You can assign the new rule entered above to the **Inbound** or the **Outbound** in the **Direction** menu.

Creating Firewall Rules (Example):

To block www.youtube.com,

1. Click the **Add** button (plus symbol). On the pop-up window, enter the settings. Click the **Update** button to save. Enter each value accurately as the following.

- Source: **IP address** or **0.0.0.0** (0.0.0.0 means all the IP addresses)
- Source Mask: **Subnet Mask** (ex: 255.255.0.0) or **0.0.0.0** (0.0.0.0 means any masks)
- Source Port Start: **1 ~ 65535** (Source Port Start 1~ Source Port End 65535 means all the ports)
- Source Port End: **1 ~ 65535** (Source Port Start 1~ Source Port End 65535 means all the ports)
- Protocol: **All**
- Specifier: **Domain**
- Destination: **www.youtube.com**
- Destination Port Start: **1 ~ 65535** (Source Port Start 1~ Source Port End 65535 means all the ports)
- Destination Port End: **1 ~ 65535** (Source Port Start 1~ Source Port End 65535 means all the ports)
- Action: **Drop**
- Direction: **Outbound**

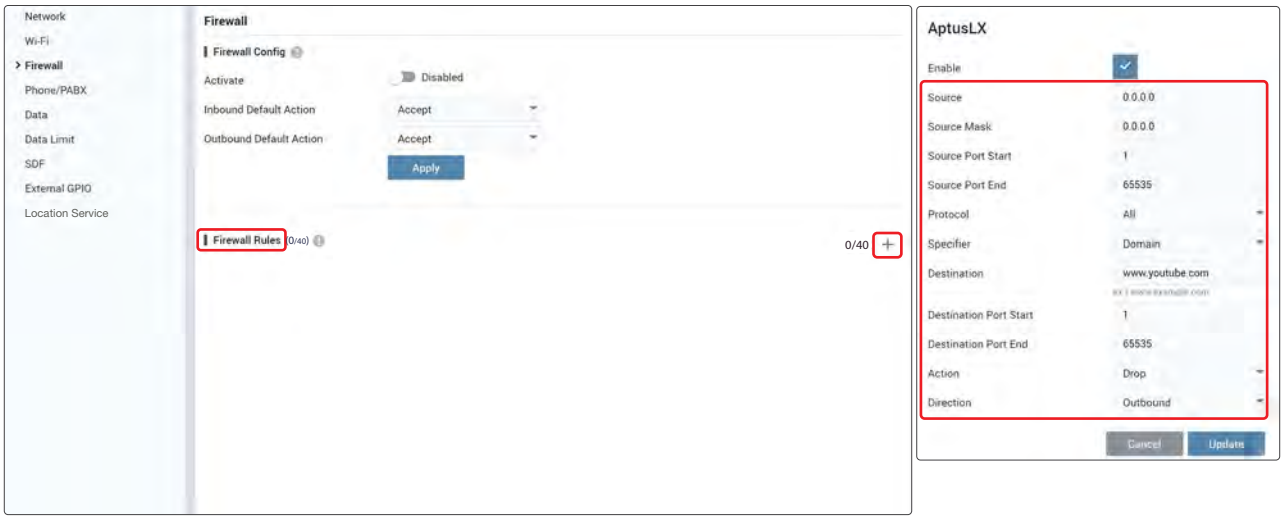

2. The Firewall rules are displayed on the Firewall page. Check the Firewall configuration setup and confirm the created Firewall Rules.

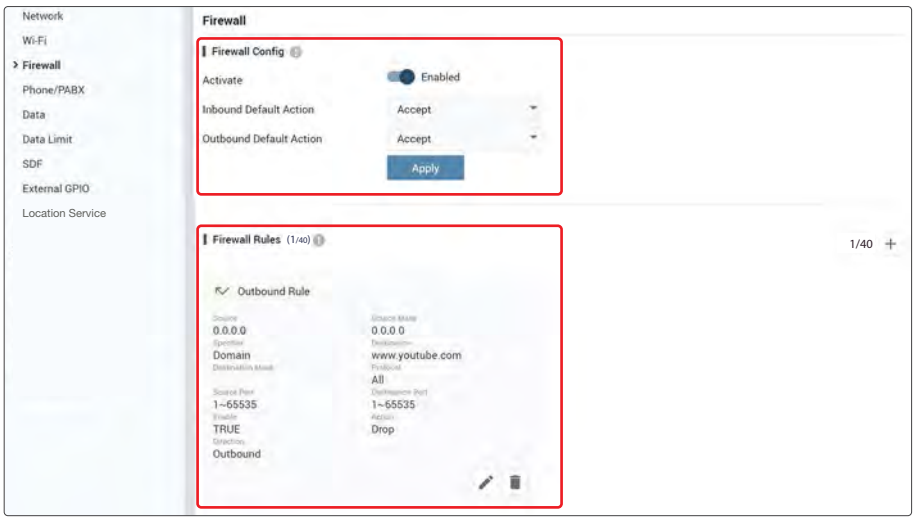

3. Try to open www.youtube.com on your web browser. Once applied, the user will not be able to access the website.

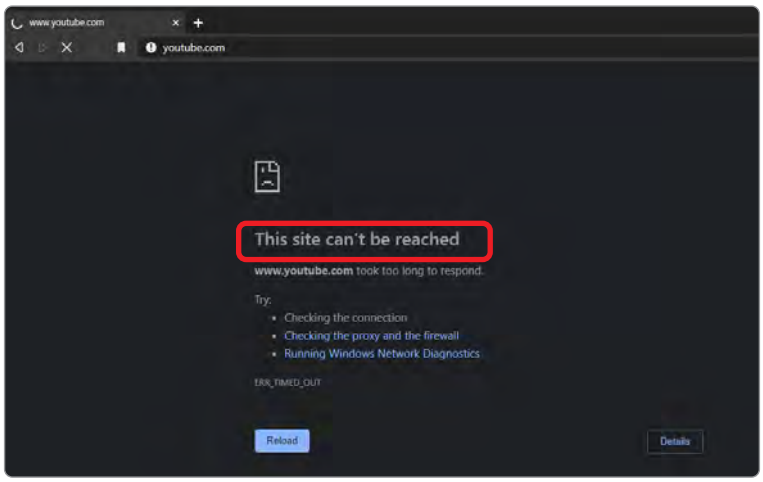

4. Make sure you can open websites other than www.youtube.com.

8.8.4 Phone/PABX

No.	Item	Description
①	Phone/PABX	Sets the phone and Private Automatic Branch Exchange (PABX).
②	Extensions Management	Sets the extension number and details. • **Edit**(✎) button: To edit the registered extension, click the edit button. Then the pop-up window is opened. You can edit details. • **Delete**(🗑) button: To delete the registered extension, click the delete button. (Extension 101 and 102 have no delete button.) • **Add**(+) button: To create new extension numbers, click the plus icon. Then the pop-up window is opened. You can assign the new extension number. Click the **Update** button. The created extension numbers are displayed on the list. - Extension: Displays the registered extension. - Inbound Line: Each inbound line can be controlled and managed by individual selection through the blue indicator. - Outbound Line: Select the outbound line from the drop-down list. - Password: Displays the password.
③	Outbound Call Prefix	Sets the Outbound Call Prefix function by toggling the activation button (Activated/Deactivated). • Activated: You must start the phone numbers with “9”. Enter ‘9 + Phone number’ by using the keypad. (e.g. 9 1234 5678). • Deactivated: You can make outbound call without starting the "9". Click the **Apply** button to apply the settings to the system.

8.8.5 Data

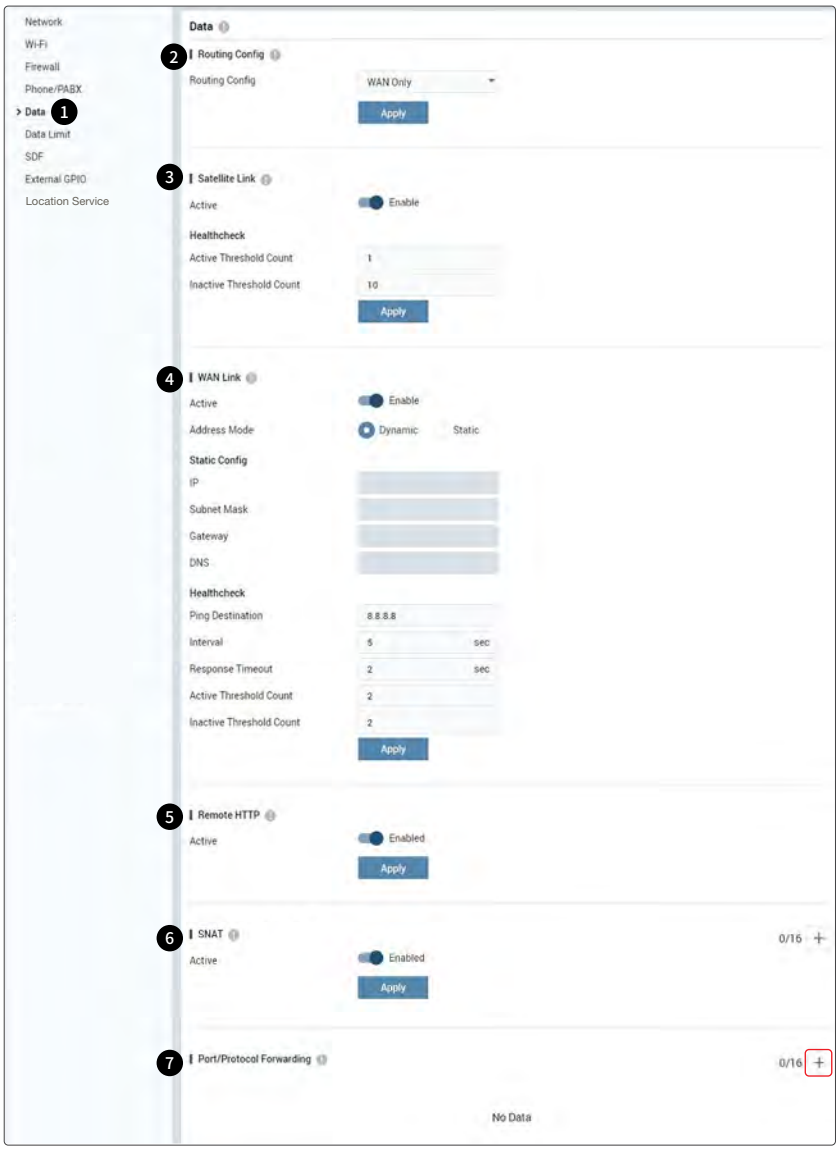

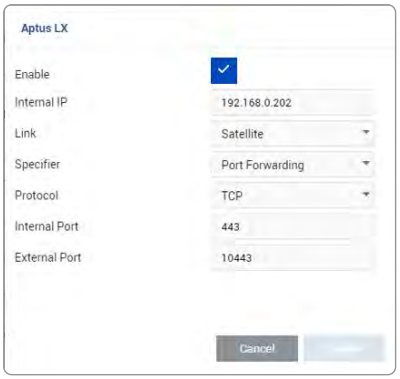

No.	Item	Description
①	Data	Sets the data settings.
②	Routing Config	Selects the data route type (None, Satellite Only, WAN Only, Satellite Preferred, WAN Preferred). Click the **Apply** button to apply the settings to the system.
③	Satellite Link	Sets the satellite link. • Active: Sets the satellite link function by toggling the activation button (Enabled/Disable). • Active Threshold Count: Enter the active threshold count. • Inactive Threshold Count: Enter the inactive threshold count. Click the **Apply** button to apply the settings to the system.

<table>
<tr><th>No.</th><th>Item</th><th>Description</th></tr>
<tr><td>④</td><td>WAN Link</td><td>Sets the wide-area network (WAN) link.
• Active: Sets the WAN link function by toggling the activation button (Enabled/Disable).
• Address Mode: Selects the IP address type (Dynamic/Static).
- Dynamic: The IP address is assigned by the network automatically.
- Static: The IP address is assigned manually.
• Static Config
- IP: Enter the static IP address.
- Subnet Mask: Enter the subnet mask.
- Gateway: Enter the gateway.
- DNS: Enter the DNS.
• Health Check
- Ping Destination: Enter the health check ping.
- Interval: Enter the interval.
- Response Timeout: Enter the response timeout.
- Active Threshold Count: Enter the active threshold count.
- Inactive Threshold Count: Enter the inactive threshold count.
Click the Apply button to apply the settings to the system.</td></tr>
<tr><td>⑤</td><td>Remote HTTP</td><td>Set the Aptus LX remote access to the terminal by toggling the Active button (Enabled/Disabled).
Click the Apply button to apply the settings to the system.</td></tr>
<tr><td>⑥</td><td>SNAT</td><td>Translates the source address in packet that enter external and leave out through C200M terminal LAN interface to the terminal ip address. Set the SNAT(Source Network Address Translation) by toggling the Active button (Enabled/Disabled).
For example) Terminal IP address: 192.168.200.1;
<table>
<tr><th></th><th>Orign Packet</th><th>Enabled SNAT</th><th>Disabled SNAT</th></tr>
<tr><td>Source</td><td>100.3.2.2</td><td>192.168.200.1</td><td>100.3.2.2</td></tr>
<tr><td>Destination</td><td>192.168.200.34</td><td>192.168.200.34</td><td>192.168.200.34</td></tr>
</table>
Click the Apply button to apply the settings to the system.</td></tr>
<tr><td>⑦</td><td>Port/Protocol Forwarding</td><td>Displays the port/protocol forwarding list. To connect to the internal PC from the outside, create a rule of port forwarding.
• Add(＋) button: To create new port forwarding rule, click the plus icon. Then the pop-up window is opened. Enter the details, then click the Update button. The created ports are displayed on the list.
- Enable: Select the checkbox to use the new port forwarding rule.
- Internal IP: Enter the internal IP address.
- Link: Select the link from the drop-down list.
- Specifier: Select the specifier from the drop-down list.
- Protocol: Select the protocol from the drop-down list.
- Internal Port: Enter the port number of internal IP for forwarding the target port.
- External Port: Enter the external port number for accessing the internal PC from the outside.</td></tr>
</table>

8.8.6 Data Limit

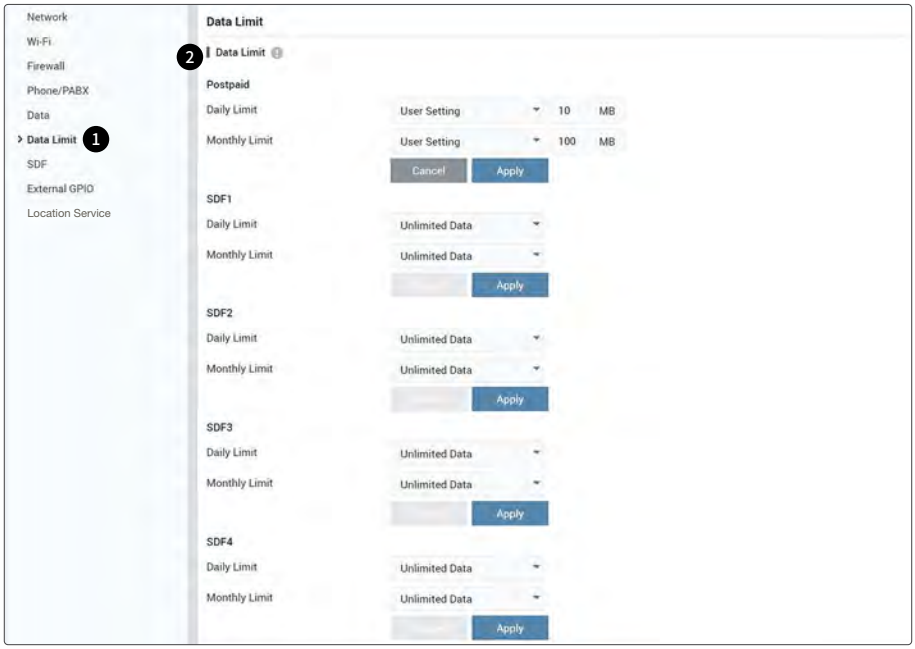

No.	Item	Description
①	Data Limit	The data usage is limited for each provision type by setting the daily limit (from 00:00:00 to 23:59:59) and monthly limit (from the first day to the last day of the month).
②	Data Limit	Select the provision type of data use from the drop-down list. The data is set in megabit (MB) and the default value of the provision type is **Unlimited Data**. • No Data Permitted: The data connection is disabled when the **No Data Permitted** is selected in either the daily limit or monthly limit menu. • Unlimited Data: There is no limit to data use. • User Setting: Enter a maximum number of MB for the data connection. If the data usage reaches or exceeds the limit, an alert message pops up on the screen and the data service is restricted to use. To continue using the data services you must select the **Unlimited Data** provision type to start a new connection. Click the **Apply** button to apply the settings to the system.

CAUTION

The data limit is set for user information only. The actual data usage is not limited exactly in the unit of the data limit settings. Note that there can be differences between the actual data usage and the data limit. Intellian is not responsible for any data access fees and charges from your service provider.

8.8.7 SDF

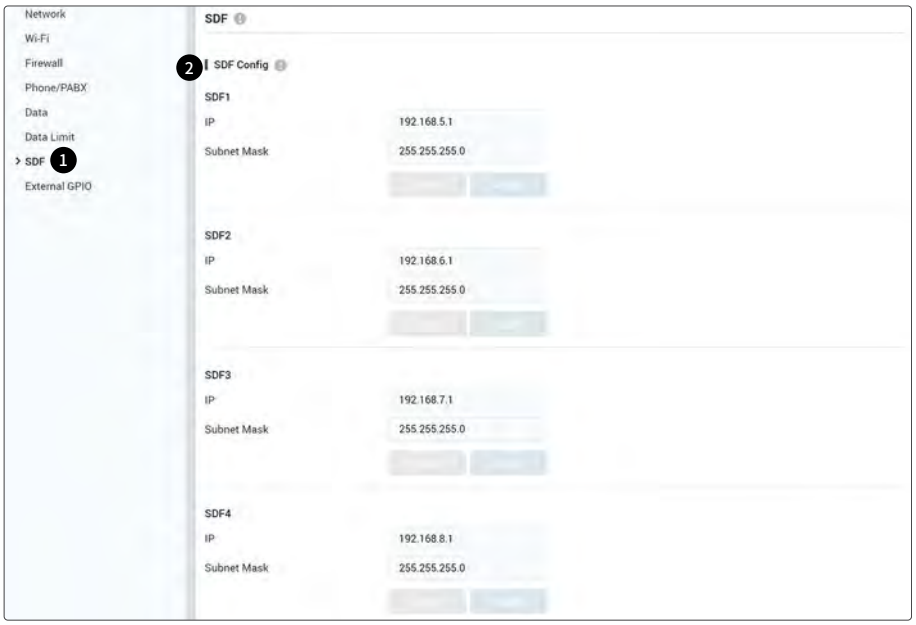

No.	Item	Description
①	SDF	Sets each SDF settings.
②	SDF Config	Enter each SDF IP and subnet address. Click the each **Apply** button to apply the settings to the system.

8.8.8 External GPIO

No.	Item	Description
①	External GPIO	GPIO stands for General Purpose Input/Output. It's a standard interface used to connect microcontrollers to other electronic devices. It allows for providing remote control of connected devices. Select the external GPIO settings from the drop-down list.
②	Inputs	Select the input settings from the drop-down list. • Block Satellite Data: It forces to block the Satellite Provisioned Post-Paid Data. • Force RF Activity Off: It inactivates the modem and forces into block using data and calls.
③	Outputs	Select the output settings from the drop-down list. • Incoming Call Alarm: Alarm for incoming calls from external phones. • Data Connection Indication: Alarm for satellite data use including voice. • System Event Indication: Alarm for system events that can be monitored on the dashboard.

8.8.9 Location Service

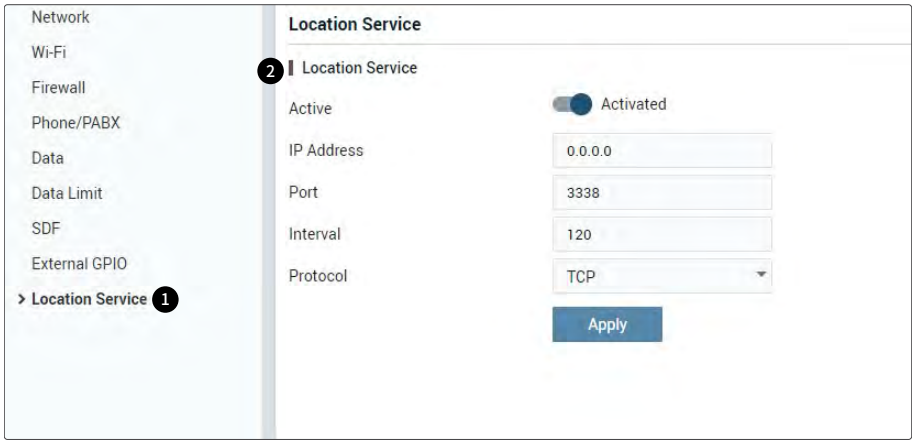

No.	Item	Description
①	Location Service	Aptus LX sends GNSS data according to the user setting. Enabling this function sends the GNSS data to a specified server at a specified periodicity.
②	Location Service	Sets the location service. • Active: Sets the Location Service function by toggling the activation button (Activated/ Deactivated). • IP address: Enter the IP address of the network device requesting GNSS data. • Port: Enter the server port number. (Default: 3338) • Interval: Enter the reporting interval. (Range: 2 ~1200 seconds, Default 120 seconds) • Protocol : Select the protocol from the drop-down list. (TCP/UDP) Click the **Apply** button to apply the settings to the system.

8.9 Tools

This menu sets and displays the Software Upgrade, Backup & Restore, Reset, Logs, and Diagnostic function.

8.9.1 Software Upgrade

No.	Item	Description
①	Software Upgrade	Upgrades antenna software firmware.
②	Upload File	Browse and select the package firmware file to upload, and then click the **Upload** button. The update may take a few minutes to complete. The upload time may vary due to a variety of factors, such as your network speed. Uploading an incorrect firmware file may cause serious damage to your antenna and BDU. Refer to the following **"Package Update Procedures"** page for more details.

Package Update Procedure

1. Browse and select the upgrade package file to upload.
2. Click the **Upload** button to transfer the Firmware package file (*.bin) to the BDU module. The antenna firmware state will appear in the pop-up window.

3. Check the current version and the new version. Click the **Upgrade** button.

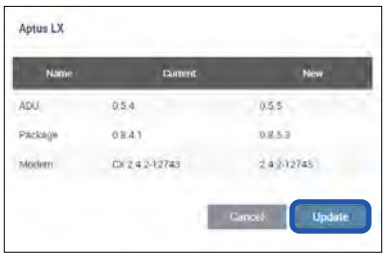

During the upgrade process, the window will display process and status.

If the firmware is successfully upgraded, "Success" will be displayed in the Status column.

4. Click the **Done** button to close the pop-up window.

8.9.2 Backup & Restore

No.	Item	Description
①	Backup and Restore	Backs up user configuration files to PC and Restores the antenna settings.
②	Backup	Saves user configuration files to PC. Click the **Backup** button to apply the settings to the system.
③	Restore	Browse and select the package restore file to upload and click the **Upload** button.

8.9.3 Reset

No.	Item	Description
①	Reset	Resets the antenna system and factory reset.
②	Reboot	Click the **Reboot** button to reset the antenna system. The user configuration is not reinitialized.
③	Factory Reset	Click the **Factory Reset** button to initialize the antenna system. The user configuration is initialized.

8.9.4 Logs

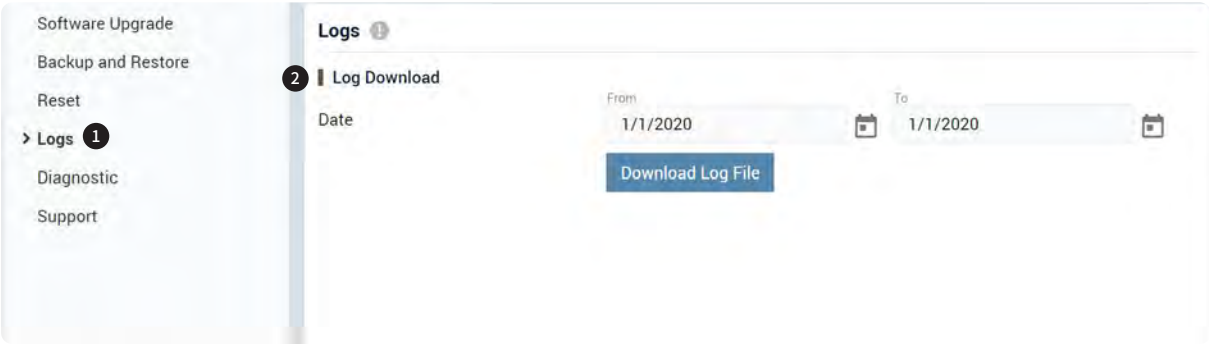

No.	Item	Description
①	Logs	Downloads the antenna log data.
②	Log Download	Displays the antenna log list. • Download Log File: Any log data (.gz) within a month can be downloaded. Click the Download Log File button.

8.9.5 Diagnostic

No.	Item	Description
①	Diagnostic	Executes antenna diagnosis test to check the antenna status.
②	Hardware Test Mode Status	Sets the hardware test function by toggling the activation button (Active/ Inactive).
③	Self Test	The activation button must be selected to the "Active" in the previous step. Click the **Start** button to run the self-test.
④	Self Test Result	Displays the self-test result.

WARNING

While selecting the **Active** button in the H/W Test Mode Activate menu, the system is in the hardware test mode. Select the **Inactive** button for normal operation.

8.9.6 Support

No.	Item	Description
①	Support	Downloads the User Guide.
②	Manual	The user guide file (.pdf) can be downloaded. Click the Download button.

Chapter 9. Specification

9.1 Antenna Specification

Item		Specification
Ship's Motion	Roll	±20° at 0.4 Hz and ±15° at 0.33 Hz
	Pitch	±20° at 0.45 Hz and ±30° at 0.25 Hz
	Yaw	±20° at 0.45 Hz and ±10° at 0.2 Hz
	Turning rate	12°/sec
	Headway	30 knots
MoCA	Frequency Band	750 MHz
	Throughput	500 Mbps in 1000 feet on RG-6
	Return Loss	8 dB
Tx Module	Frequency Range	1616 ~ 1626 MHz
	Output Power level	41 dBm (12.6 W) nominal
	Normal signal Gain	42 dB typ.
ADU to BDU Cable (Antenna Cable)		Single Coaxial Cable
Antenna Power		48 V DC supplied from BDU over Coax Cable
Antenna Power Consumption		Antenna Power 48 Vdc Max 80 W
Radome Height		143 mm (5.63")
Radome Diameter		Ø240 mm (9.45")
Antenna Weight		3.5 kg (7.7 lb)
GNSS		GPS, GLONASS

9.2 RF Specification

Item	Specification
Rx Frequency	1616 MHz ~ 1626.5 MHz
Overall Rx Gain	~22 dB
G/T	-31 dB/K
Tx Frequency	1616 MHz ~ 1626 MHz
Overall Tx Gain	42dB
Antenna Gain (nominal)	~ 1dBi
EIRP	12 dBW
Polarization	RHCP
Axial Ratio	<3.5 dB
Antenna Type	Omnidirectional

9.3 Below Decks Unit Specification

Item	Specification	
Size (W x D x H)	315 x 190 x 42 mm (12.4" x 7.5" x 1.7")	
Weight	1.5 kg (3.3 lbs) (Stand-alone Type)	
LED Indicator	3 LEDs for Power, Tracking, Event	
SIM	1 ea, 2FF Push-Push type with locking structure	User Authentication
Ethernet	4x RJ45 female (FB500)	TCP/ IP connection 2 port PoE
RF Interface	1 ea, TNC Female	Sub-System Connection to ADU
Analog	1 ea, RJ14 Female	Analog Phone
GPIO	1 ea, (16 pins)	General Purpose I/O
Wi-Fi	1 ea, SMA Female (802.11 b/g)	External Wi-Fi Antenna
On/Off switch	1 ea., power switch or toggle type	System Power Switch
Reset	1 ea	System Reset
1 ea Grounding	1 ea	Grounding
BDU Power Input	10.8 ~ 30 V DC, 120 W max	
Web Interface	Embedded in BDU, available by Ethernet or Wi-Fi	

9.4 Packing Specification

Item		Specification
Package	Size	TBD
	Weight	TBD

9.5 Environmental Specification

Test	Intellian Standard	
Temperature (ADU)	Operational	IEC-60945 (-25 °C to + 55 °C / Power On)
	Survival	IEC-60945 (-40 °C to + 80 °C / Powered On and a non-functional state)
	Storage	IEC-60945 (-40 °C to + 85 °C / Power off)
Temperature (BDU)	Operational	IEC-60945 (-25 °C to + 55 °C)
	Survival	IEC-60945 (-40 °C to + 80 °C)
	Storage	IEC-60945 (-40 °C to + 85 °C)
Humidity	IEC-60068-2-30 Upper test Temp.: + 40 °C (-3), Humidity 98 % Lower test Temp.: +15 °C (+3), Humidity 71 % ~ 78 %	
Vibration	Operational	IEC-60945
	Survival	IEC-60721-3-6 Class 6M3
Shock (ADU)	Operational	Half sine, 20g / 11 ms
Shock (BDU)	Operational	IEC-60068-2-27
	Survival (Transient)	IEC-60721-3-6 Class 6M3
	Survival (Bump)	IEC-60721-3-6 Class 6M3
Salt Mist	Saline solution: 5 % NaCl, PH 6.5 to 7.2 at 20 °C ± 2 °C Storage period: 7 Days (IEC-60945)	
Wind Load	200 km/hr	
Water Ingress	ADU	IP66 (Water Proofing: IEC-60529)
	BDU	IP31

Chapter 10. Warranty Policy

Intellian systems are warranted against defects in parts and workmanship, these warranties cover THREE (3) YEAR of parts and THREE (3) YEAR of factory repair labor to return the system to its original operational specification.

Warranty periods commence from the date of shipment from Intellian facility or date of installation, whichever is sooner. The warranty provides a maximum of 6 months additional coverage if submission of authorized form, which is described installation, occurs within 6 months from the shipment date.

Intellian Technologies warranty does not apply to product that has been damaged and subjected to accident, abuse, misuse, non-authorized modification, incorrect and/or non-authorized service, or to a product on which the serial number has been altered, mutilated or removed. Intellian Technologies, will (at its sole discretion) repair or replace during the warranty period any product which is proven to be defective in materials or workmanship, in accordance with the relevant product warranty policy. All products returned to Intellian Technologies, during the warranty period must be accompanied by a Service Case reference number issued by the dealer/distributor from Intellian Technologies, and (where applicable) a copy of the purchase receipt as a proof of purchase date, prior to shipment. Alternatively, you may bring the product to an authorized Intellian Technologies dealer/distributor for repair.

Chapter 11. Appendix

11.1 Tightening Torque Specification

This table shows the recommended values of tightening torques.

Bolt Size	Tightening Torque (N-m)
M2	0.5
M2.5	1
M3	1.5
M4	3
M5	6
M6	12
M8	27
M10	50
M12	85
M14	130
M16	200

11.2 Pole Mount Kit

Refer to the following Pole mount kit drawing for more details.

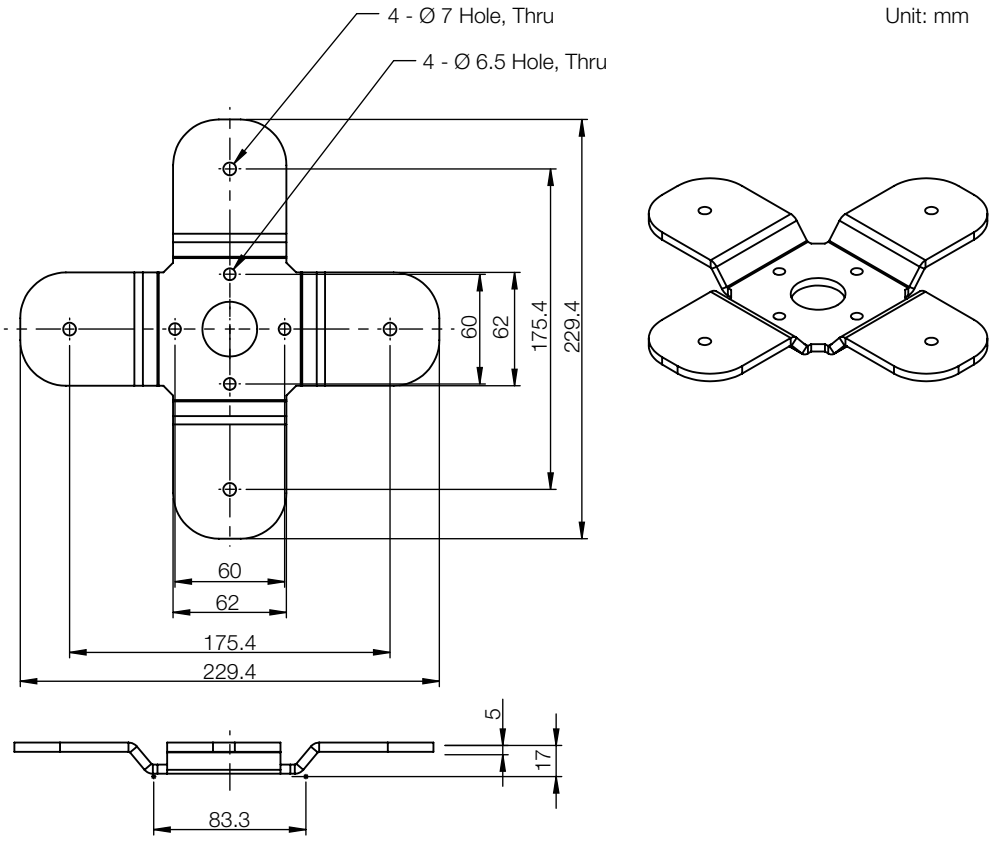

Figure 45: Mounting Bracket

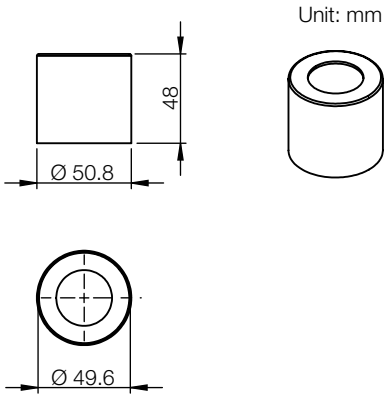

Figure 46: Pole mount-Sleeve

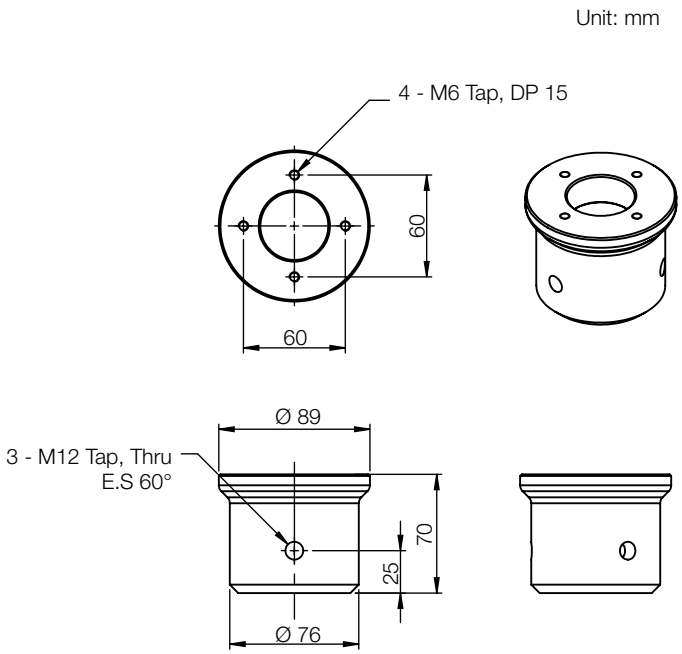

Figure 47: Mounting Hub