Electric vehicle AC charger installation& instruction manual

AC dual outlets charger series

DIRECTORY

SAFETY MATTERS **2**

SAFETY ANNOUNCEMENTS 2

IDENTIFICATION DESCRIPTION 2

ELECTRICAL SAFETY 3

OTHER 4

PRODUCT INTRODUCTION **5**

SERIAL NUMBER DESCRIPTION 5

APPEARANCE DIMENSIONS 6

PRODUCT FEATURES 7

SYSTEM ARCHITECTURE **9**

ELECTRIC 9

CORRESPONDENCE 9

INSTALLATION **9**

ILLUSTRATE 9

PREPARE FOR WORK 12

INSTALLATION INSTRUCTIONS 15

OPERATIONDEBUG **17**

OPERATION INSTRUCTIONS 17

SET UP 21

CHECK DEBUGGING 25

PLATFORM CONNECTIVITY **25**

CONNECT TO THE CHARGECORE PLATFORM 25

AFTER-SALES MAINTENANCE **26**

AFTER-SALES SERVICE 26

DISCLAIMER 26

MAINTENANCE 27

ILLUSTRATE 28

APPENDIX **29**

THE SCREEN ICON EXPLAINS: 29

FAULT ELIMINATION OPERATIONS (CAUSE AND RESOLUTION). 30

THE WHOLE MACHINE ELECTRICAL DIAGRAM 31

SAFETY MATTERS

SAFETY ANNOUNCEMENTS

*This device can only charge electric vehicles that meet the power supply standards of UL2251 and UL2594 !

Before operating the machine, read the instructions and precautions carefully to reduce the occurrence of accidents. The "caution, caution, warning, hazard" in the product and product manual does not represent all safety matters to be observed and is only intended to supplement the various operational safety precautions.

In carrying out the company's products and equipment operations, must comply with the relevant industry safety norms, strictly abide by the Universal EV LLC to provide the relevant equipment precautions and special safety instructions.

Note: the upper switch of the charging pile shall have RCD device

IDENTIFICATION DESCRIPTION

	Risk of electric shock ,Indicates that the operation or condition of the hazardous voltage must be very careful
	Important security information must be operated with great care or condition
	Indicates the risk of burns from high temperature areas or areas with high component temperatures
	Ground protects the connection point
	DC electricity
	AC electricity
	Indicates that the said action must be performed using clothing and/or personal protective equipment provided by the employer
	Type A RCD
	Type B RCD

ELECTRICAL SAFETY

HIGH VOLTAGE

	Some components of the power system operate with high voltage, and direct contact with or indirect contact with these components through non-insulated objects poses a fatal hazard.

The installation of AC power supply equipment must comply with the safety regulations of the relevant industry, and the personnel who carry out the installation of AC equipment must have high voltage, AC power operational qualifications.

It is strictly forbidden to wear watches, bracelets, bracelets, rings and other conductive objects on your wrist.

Turn off the power immediately if you find water or moisture in the cabinet. When operating in humid conditions, water should be strictly prevented from entering the equipment.

On switches and buttons that are not allowed during installation, a do not operate sign must be hung.

	Construction of high-voltage lines can cause fire or electric shock accidents. The racking and wiring of AC cables through the area must comply with the local regulations and specifications. Only personnel qualified for high-voltage and AC operations can carry out various high-voltage operations.

TOOL

	Special tools must be used for all kinds of operations of high AC voltage.

THUNDERSTORM

	High AC voltage operation in thunderstorms are strictly prohibited.

In thunderstorms, strong electromagnetic fields are produced in the atmosphere. Therefore, in order to avoid lightning damage to the equipment, to do a good job in time for the equipment to ground.

ELECTROSTATICS

	Static electricity generated by the human body can damage electrostatic sensitive components on the board, such as large-scale integrated circuits(ICs). In contact with equipment, hand-held boards, circuit boards,IC chips, etc. , in order to prevent the human body static damage sensitive components, must wear anti-static bracelet, and anti-static bracelet on the other end of a good ground.

SHORT CIRCUIT

⚠	It is strictly forbidden to short-circuit the power supply system to the positive and negative poles or to short the non-ground pole to ground during operation. Short circuits can cause equipment to burn and pose a personal safety hazard.

- The polarity of the cables and interface terminals must be strictly checked when carrying out live work.
- Power distribution operation space is compact, before any operation should pay attention to choose the operating space.
- The operation must use an insulation tool.
- When operating with electricity, care must be paid to keep your hands, wrists and arms tense to prevent accidents in the event that the tool slips and the tool or the human body moves too much.

OTHER

THE SHARP CORNER OF THE OBJECT

⚠	When moving equipment by hand, wear protective gloves to prevent cuts.

THE POWER CABLE

⚠	Make sure that the cable label is correct before connecting the cable.

SIGNAL LINE

⚠	The signal cable should be tied separately from the power cable and at least 15mm apart.

CAUTION/ WARNING

⚠	Do not use this product if there is any damage to the unit.
⚠	Risk of electric shock. Do not remove cover or attempt to open the enclosure. No user serviceable parts inside. Refer servicing to qualified service personnel
⚠	To reduce the risk of fire, replace only with same type and ratings of fuse
⚠	Risk of explosion. This equipment has arcing or sparking parts that should not be exposed to flammable vapors. This equipment should be located at least 460 mm (18 inches) above the floor.
⚠	DO NOT INSTALL ON OR OVER COMBUSTIBLE SURFACES

PRODUCT INTRODUCTION

SERIAL NUMBER DESCRIPTION

AC002	0722	T1T2	A01	No	ROU0120030002
1	**2**	**3**	**4**	**5**	**6**

6	PILE ID NUMBER ROU01 2003 0002 - ROMANIA CUSTOMER LIST 1,2MARCH020, PILE 0002.
5	FOUNDRY
4	BOM VERSION
3	STANDARD： T2：TYPE2 AC T1：TYPE1 AC GA：GB/T AC C2：CCS2 C1：CCS1 J：CHADEMO GD：GB/T DC
2	CHARGING POWER: TYPE2 AC PILE RATED POWER 22KW CCS2 PILE RATED POWER 40KW CHADEMO PILE RATED POWER 20KW
1	PRODUCT MODEL: AC001- PLASTIC HOUSING 1 AC PILE AC002- METAL COLUMN AC PILE AC003- ALUMINUM AC PILE AC004- PLASTIC HOUSING 2 AC PILE AC005- METAL SHELL AC PILE PAC- ADVERTISING AC PILE

The NKR-AC002 has a dual connectors output of 2 x 7/11kw function, dual outlets can be configured at the same time or in combination Type1 J1772. The system can be installed outdoors (but for safety reasons, if the water level reaches the charger connector, it should not be used in rain or snow).

APPEARANCE DIMENSIONS

Scenario	Parking / public charging station
material	Metal housing
Dimensions(mm).	280(L)x 400(T)x 1630(H), excluding hangers, etc
Installation method	Floor Stand
Cable layout	Bottom
weight	53kg
CABLE LENGTH	4.2m（External Line）
Charging socket	type1+ type1

outside view

A. touch screen	B. Light	C. Door
D. Card Reader	E. outlet	F. The cable hanging ears

Technical parameters

APPEARANCE PARAMETERS	Dimension	280(L)*400(W)*1630(H)（mm）
	Weight	53KGS (INCLUDING CABLE)
	Cable length	4.2m（External Line）AND CAN BE CUSTOMIZED
	Shell material	SHEET METAL
	Screen	5-INCH LCD TOUCH SCREEN
POWER CHARACTERISTICS	Input voltage	240V(AC)±10%
	Input frequency	60HZ
	Rated power	(48A)11KW*2
	Measurement accuracy	≤±0.5%
	Output voltage	SAME INPUT VOLTAGE
	Output current	48A
FEATURE DESIGN	Ui	LED, SWIPE, TOUCH SCREEN
	Standard	UL2594 和 UL2231
COMMUNICATION	Internet interface	ETHERNET(2.4G WIFI, 3G/4G AS OPTIONAL）
	Ocpp	OCPP 1.6J
THE WORKING ENVIRONMENT	The application site	INDOOR/OUTDOOR
	Working temperature	-30℃ ~ +50℃
	Working humidity	5% TO 95% NO COAGULATION
	Working latitude	<2000M
	Protection level	TYPE-3
	Cooling method	NATURAL AIR COOLING
	Leak current detection	CCID 20

PRODUCT FEATURES

NKR-AC002 AC Charger have a modern design and user-friendly interface, mainly for public commercial use. Modular design increases charger utilization and is easy to operate and maintain.

- safe
  - A variety of hardware protection features
    - CCID 20mA
    - Over current protection
  - Comprehensive software protection features that provide multiple protections.
  - All critical components have UL/ETL certificates
- intelligent
  - The terminal charger is connected to the cloud OCPP platform intelligence

- Remote diagnostics, remote upgrades
- Internal high-precision MID AC meter
- Supports simultaneous charging of multiple connectors
- The OCPP platform end sets the maximum output power according to the time period
- Support for credit card POS payment (optional);
- Support for OCPP1.6J (later direct upgrade to 2.0)

➢ Convenient

- Wireless or wired communication, flexible networking
- Open communication protocol for sweep charge, swipe charging, and API services
- There are several ways to terminate the charge
  - Time
  - Electricity
  - Auto-filled

➢ Optional features

- Plug and charging (optional).

SYSTEM ARCHITECTURE

ELECTRIC

Transformer - Switch - Charger - Car

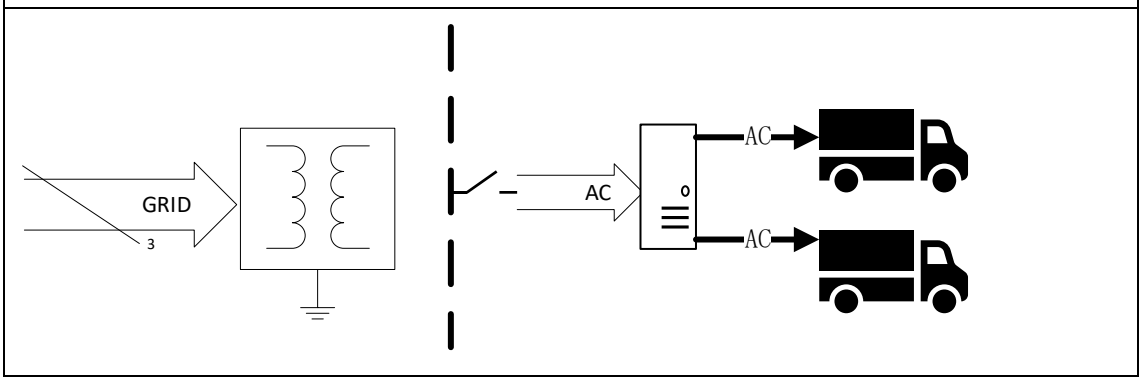

CORRESPONDENCE

BMS-EVCC-SECC- Platform

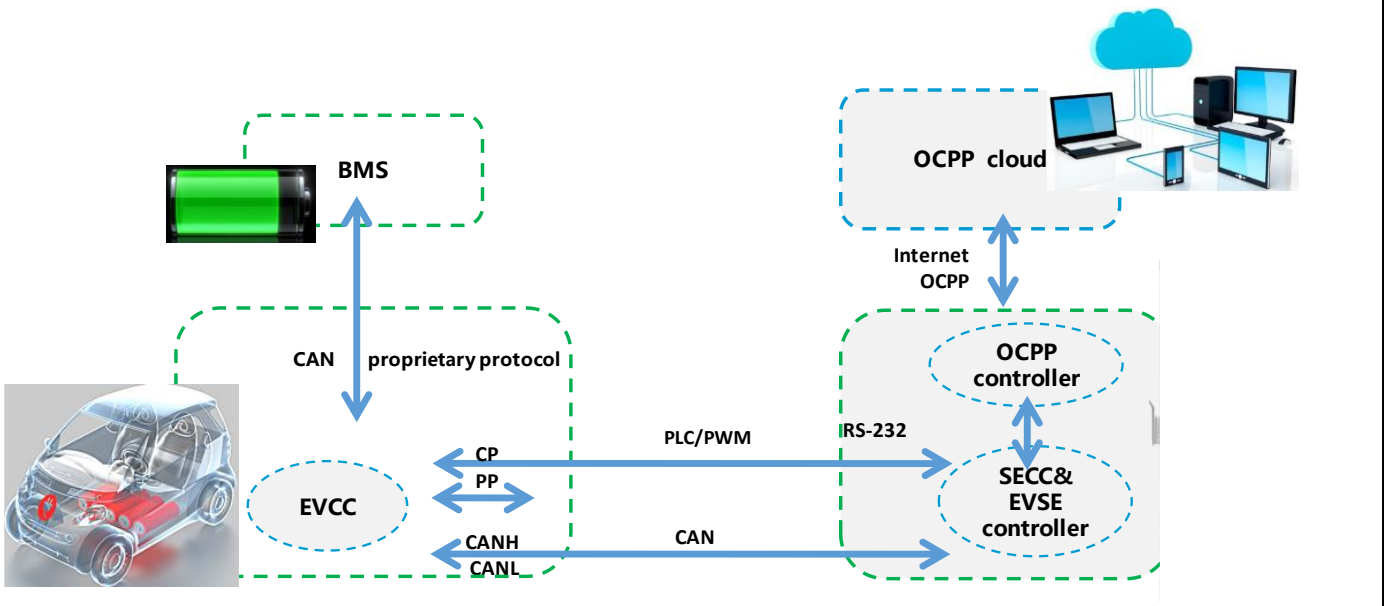

INSTALLATION

ILLUSTRATE

SAFETY INSTRUCTIONS

The operating voltage and current inside the charging system are high, and the following regulations should be observed at all times in order to ensure personal safety:

1. Charging systems can only be installed by persons who have been trained in the charging system and have sufficient knowledge of the charging system. Always follow post-directory safety precautions and local safety regulations during installation.

2. To operate inside the charging system, make sure that the charging system is not charged. The power input to the charging system must be disconnected.

4. Distribution cable wiring should be reasonable and protective to avoid accidental contact when operating power supplies.

CHECK OUT OF THE BOX

Only after the goods arrive at the installation site can they be opened and the boxes opened for inspection. When the inspection, first open the box with the packing slip storage box, take out the packing list, against the packing list item by item inspection. Secondly, check the number and serial number of the box identification, the correctness of the equipment packing, the number and type of accessories and the integrity of the items.

Product arrival, confirm whether the packaging is broken, label is complete and correct, if there is an anomaly, please immediately inform the carrier, and take photos to collect evidence, can be signed and noted first, at the same time immediately contact the manufacturer to discuss processing.

According to the packing list, inventory the product accessories and accompanying documents are complete (refer to the shipping list), and keep the accessories and documents properly.

Visual inspection ensures that the product is free of unusual conditions such as collisions, scratches, cracks, dents, rust, breakage, and peeling of paint.

Check the equipment for unusual conditions such as pressure, rust, breakage, etc.

Sign receipt documents, record the situation, keep documents in a timely manner, scan them for distribution, or hand them over to related parties.

INTERNAL STRUCTURE

Labeling of internal key components

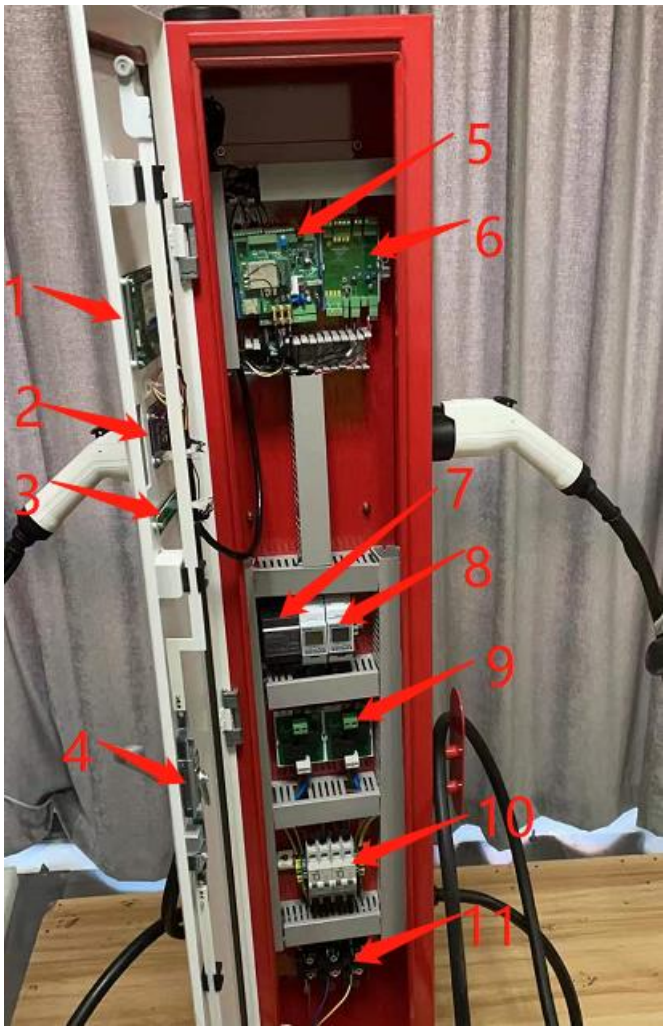

1. touch screen	2. Swiper	3. Light	4. Door lock	5. Main controller OCPP
6. RCP（CCID 20/PE）	7. Auxiliary power supply	8. AC meters	9. Contactor*2	10. MCB
11. Line in terminal	12.			

RANDOM FILE / ACCESSORY LIST

The packing list can be found in the on-the-go document.

PREPARE FOR WORK

SITE SPACE REQUIREMENTS

Adequate installation space should be reserved to ensure safe and reliable operation, ventilation and maintenance of the equipment.

The installation space requires 1386 x 900 mm, calculated as follows:

The front reserved spacing ≥ 400mm to ensure the front door open/close is normal and all related operations are unhindered

The left reserved spacing ≥ 500mm to ensure that the left door switch is not blocked

The right-hand reserved spacing ≥ 500mm to ensure that the right-hand door switch is not blocked

The rear reserved spacing ≥ 10 0mmto ensurethat the rear door switch is not blocked

Look down at the dimensions

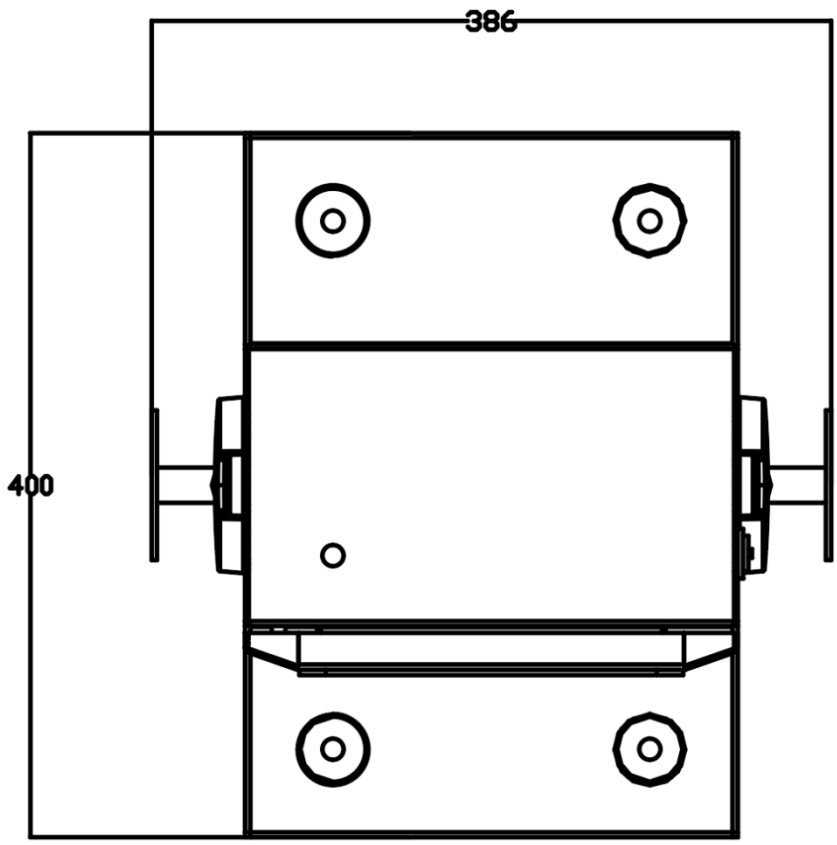

CIVIL / FOUNDATION REQUIREMENTS

The foundation is not necessary when the equipment is installed indoors or in other higher and drier sites, but the ground level error per square meter must not exceed ±1.5mm, and the ground strength level of the installation position is not less than C30. When the equipment is installed outdoors and in low-lying, easy-to-water applications, cement or slot steel

base must be installed, cement base is 200mm above the ground(the recommended height below the ground is not less than 500mm), the mounting surface is pre-buried 4 M6 stainless steel bolts, bolt thread exposed to the ground 30±3mm.

Do not install on flammable objects, and seal the hole with fireproof mud.

The cable wire enters through the bottom of the charger and the inlet hole is required

- On the ground where the charger is to be installed, dig a hole not smaller than the figure size
- Make sure that the cable is accessible from the pre-buried pipe
- The concrete on site is poured out of the concrete foundation shown in the figure below
- It is recommended that the base of the charger be at least 200mmabovethe ground, which can effectively reduce the risk of flooding
- Reserve a cable length of 1m exposed above the base forinternal wiring
- Fill the inside and outside of the base with sand and stone, and the inlet holes need to be blocked with fire-resistant mud to prevent small animals such as rats from entering the equipment

The base dimension
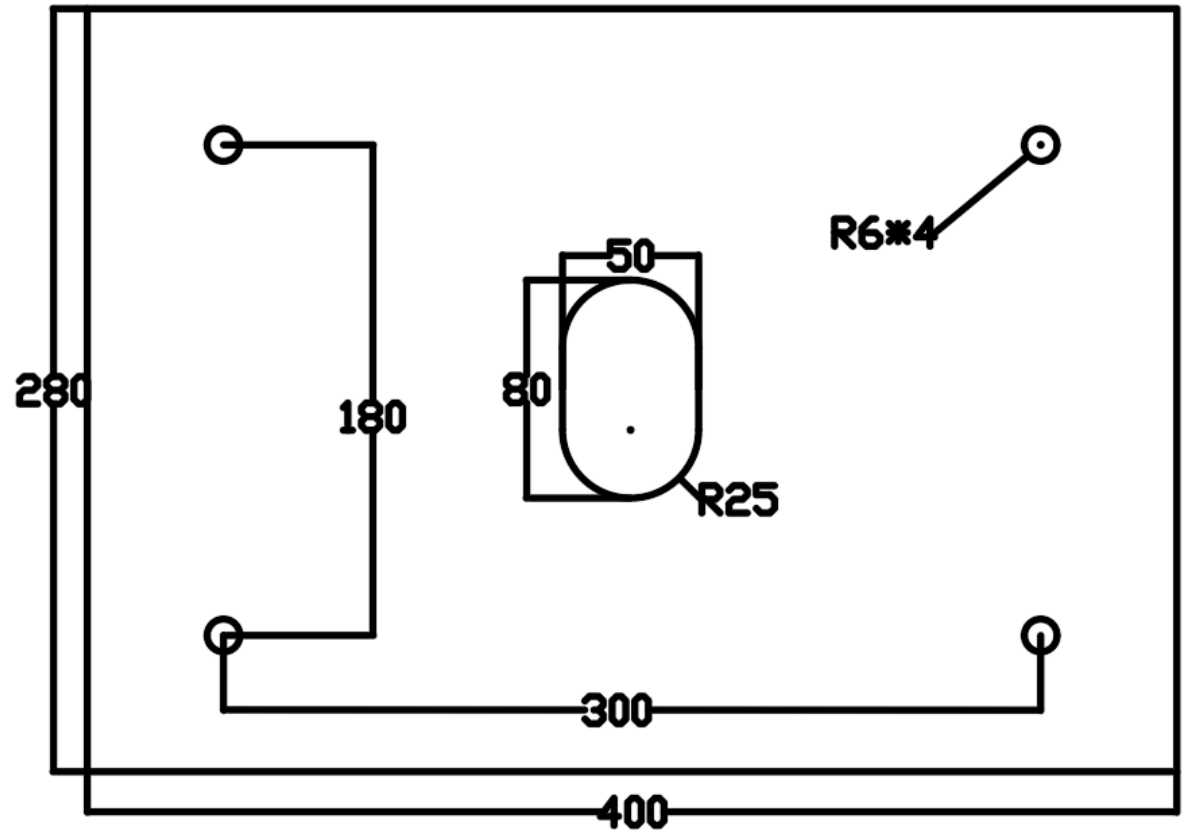

ELECTRICAL REQUIREMENTS

Cable type: Three-phase that confirms the need for shielding as required by local laws or terms

- If there is a shield, both ends of the shield are connected to the PE secure ground
- Cable diameter requirements are determined by the contractor or electrical engineer based on power, distance, and industry standards, or recommended:
  - The voltage level is 240/480V or higher
- PE Safety ground wire requires the same size model as the L wire。
- The power distribution input wire diameter of the charger is recommended not less than the following recommended values, and should have a separate circuit breaker and leakage (the following table is 25℃ environment, according to the actual cable material and laying method to determine the specific wire diameter).

Charger power(kW).	11	11*2
Input voltage(V).	240V/480	
Input current(A).	48	48+48
Recommended line diameter (AWG).	8	3

NETWORK CONNECTIVITY REQUIREMENTS

The recommended way to connect to the network is to access the 4G wireless communication/WiFi module integrated via the charger. Users are required to prepare a SIM card that meets the local networking requirements. You need to make sure that the local signal strength is strong enough and stable, otherwise you need to contact your communications operator to install a signal amplifier.

If there is no local 3/4 communication signal, a standard wired Internet connection is available. Wired connections must meet the following requirements:

- RJ45 Ethernet
  - Network cable type: 5e classes or more,8P plus PE,shielding wire
  - It is recommended that the line length within 75m, greater than 75m, requires customized engineering solutions
- Minimum bandwidth is required
  - Upstream:128 kbps
  - Downstream:4 Mbps
- Demand connection reliability:99.9%.
- For special configurations, please contact us

TOOL PREPARATION

UNIVERSAL TOOL

NAME	DESCRIPTION	QUANTITY
Multimeter	Check the electrical connections and electrical parameters	1
Electric impact drill	Drill	1
Impact drill bit (Ø 14)	Drill	2
Tape measure (5m)	Measurement	1
Level ruler	Measurement	1
One/cross screwdriver	Unpacking / housing	1
Pliers	Unpackag	1
Cable stripping pliers	Remove the insulation sheath	1
Terminal pressure line pliers	Press the terminals	1
Bevel pliers	Cut the cable	1
Little hammer	Unpacking, tapping, adjustment	1
Carrying equipment	For moving and hoisting Charger	1
PVC	Insulation tape insulation cladding connection	1
Personal protection tools	Ensure the safety and health of operators	1

SPECIAL TOOLS

NAME	THE MAIN ROLE	QUANTITY
/	/	/

INSTALLATION INSTRUCTIONS

CABINET INSTALLATION INSTRUCTIONS

TRANSFER LOADING AND UNLOADING

- Lift or move the device must be operated by a dedicated load-bearing forklift/crane, tugboat or other professional load-bearing transfer device and professionals
- Do not dump or hit the device

Move the equipment to a pre-made concrete base and choose to carry the charger in place by lifting or lifting forklift.

BE FIXED IN PLACE

The cabinet is placed on the base

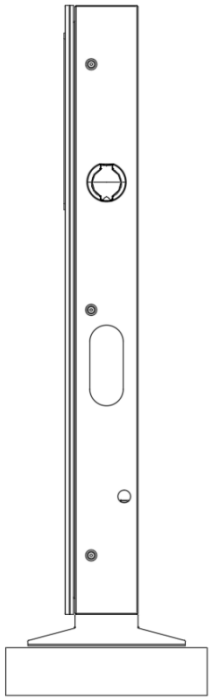

Secure the cabinet to the base

Carefully slowly lower and place the charger in place precisely

Be careful to make sure that the cable has been exposed to the cabinet along the seal sleeve

Be careful to ensure that the cabinet holes and bolt holes are aligned

Insert flat washers, spring gaskets and nuts in the middle of the four corners and front and rear sides

Lock these nuts and use torque 95.5N • m

Keep the device upright and tilt at no more than ±15degrees

CONNECT THE POWER CABLE

📖 Note: Put all switches, fuses, etc. in the open position before connecting electrically

CONNECT THE GROUND CABLE

The charging system uses a common grounding method, using a ground cable to connect the ground copper row of the charging cabinet with the main ground row of the engineering installation.

CONNECT THE AC INPUT, WHICHEVER IS ACTUAL

1. The AC input cable is routed from the user's power distribution switch and is connected to the output terminal of the user switch when power is finally ready to be powered on. The user distribution switch should have overcurrent, short circuit, lightning strike and other protective devices, the capacity of the power distribution switch is recommended not less than 1.5 times the actual load capacity.

2. The L1-phase, L2-phase of the AC input cable should use brown and blue cables (national standard reference below). If the cable has only one color, the line number identification is pasted or marked with a different color insulation at both ends of the cable.

3. Only copper wire can be used and lock these nuts and use torque 40.71±10%N • m

4. Cables are not allowed to have severed heads, broken heads, and scratches.

color	brown	Blue	Yellow and green
Phase order	A(L1)	B(L2)	EP

The AC input can be introduced from the bottom of the cabinet through a trench and connected sequentially to the corresponding post (terminal).

identification chart

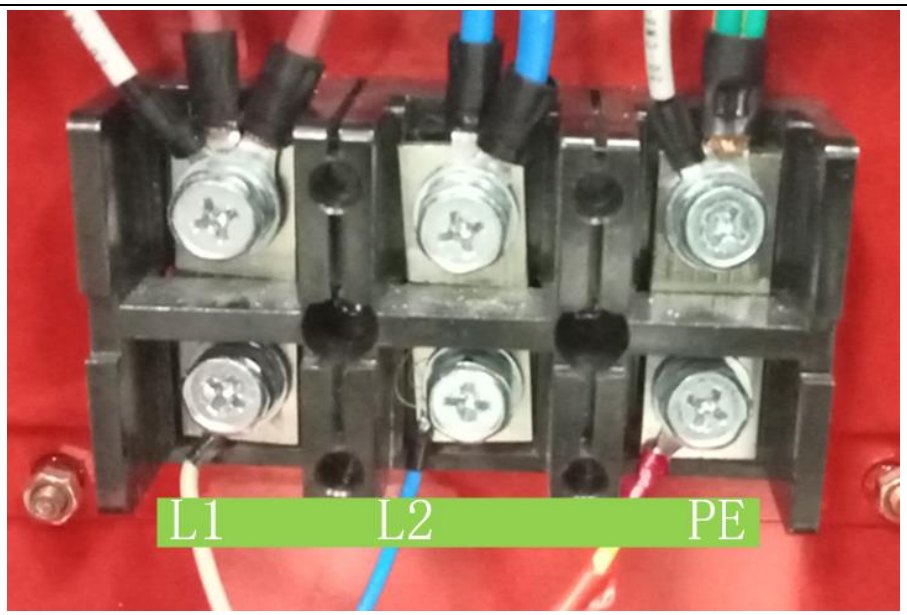

OPERATIONDEBUG

OPERATION INSTRUCTIONS

POWER-ON PROCESS

After ensuring that the charger installation is stable, the wire wiring is reliable, and commissioning is complete, the charger can be powered on.

Confirm that AC circuit breakers, contactors, leak insurance is in a disconnected state, switch on AC feed, check the charger should be no alarm, abnormal state.

Closed AC circuit breaker, leak insurance and other switching devices, charger screen and indicators should be lit, the interface shows the door alarm, fault indicator is on, indicating that the access control system is working normally.

Check that the components are working properly and close the doors, and the fault should be eliminated.

Switch chart (whichever is actual).
Power on standby flowchart

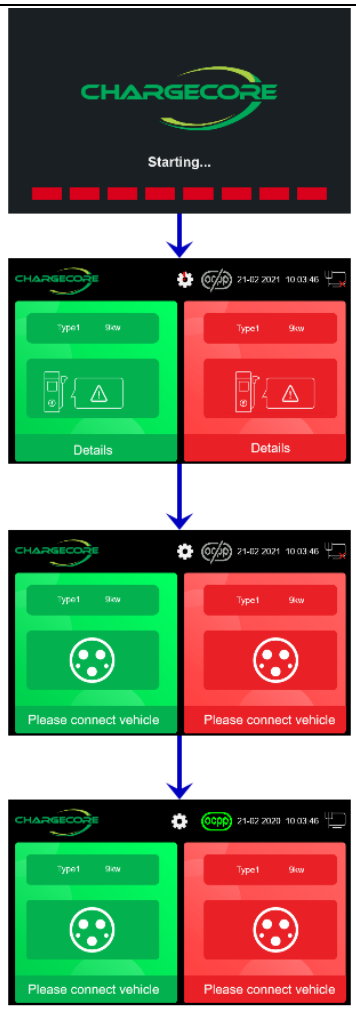

1 Boot up.

2 Power On Self Test

3 when connected to the Internet

4 OCPP connected.

CHARGING OPERATION

Charging can be divided into two ways: card-free charging (code scanning, APP), card charging (IC card, POS machine (optional)).

Click on the Charger information to obtain the charger output capacity and operating status information, which cannot be charged when the operating state is alert. Charges are required after troubleshooting against the fault identification or fault code.

In the charging mode interface, you can choose to charge automatically, by time, by charge, by amount, and by percentage.

When the set value is reached or the vehicle issues a stop command, the charger automatically stops charging.

Charging operation flowchart

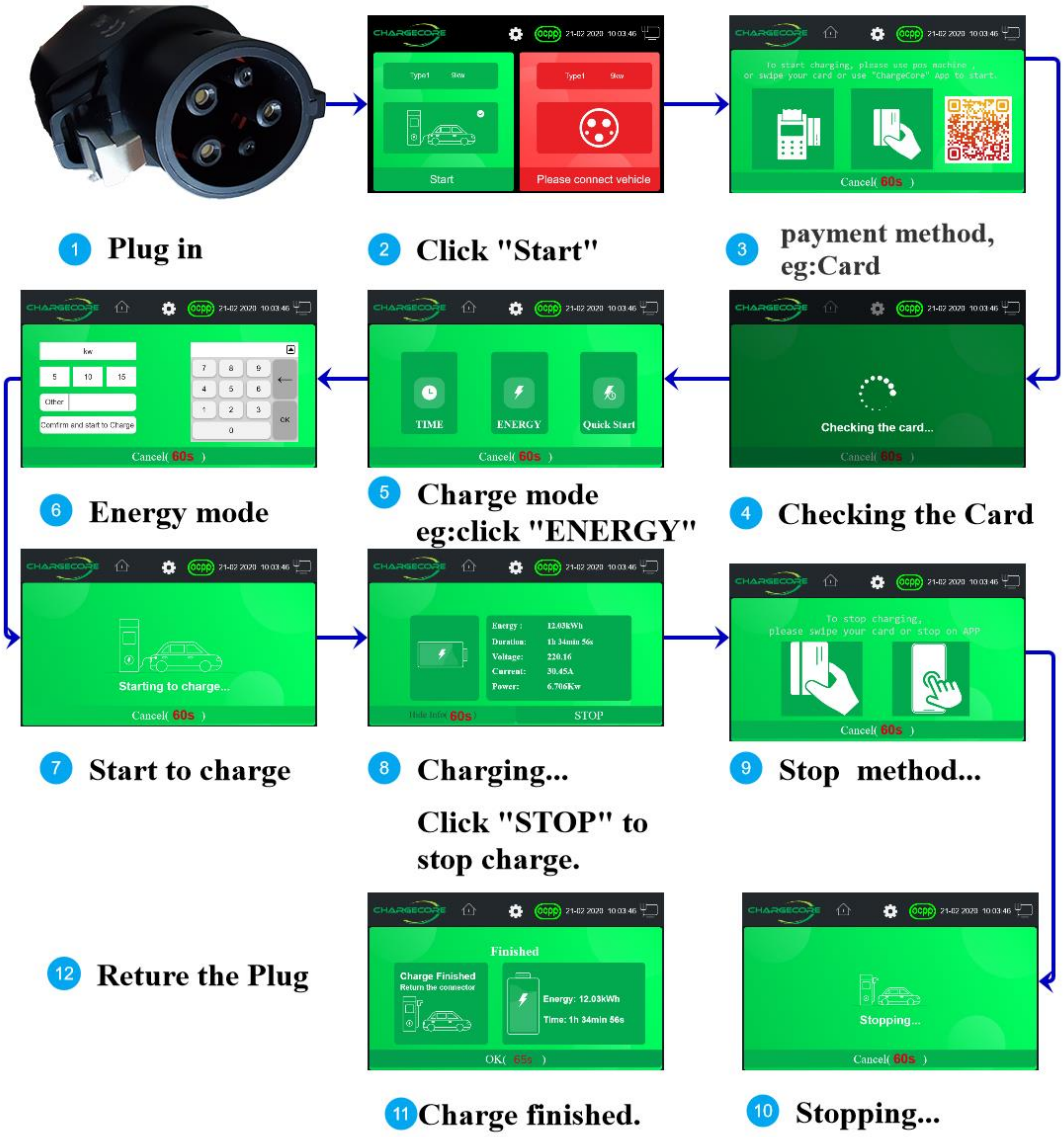

Set up a non-operational mode flowchart

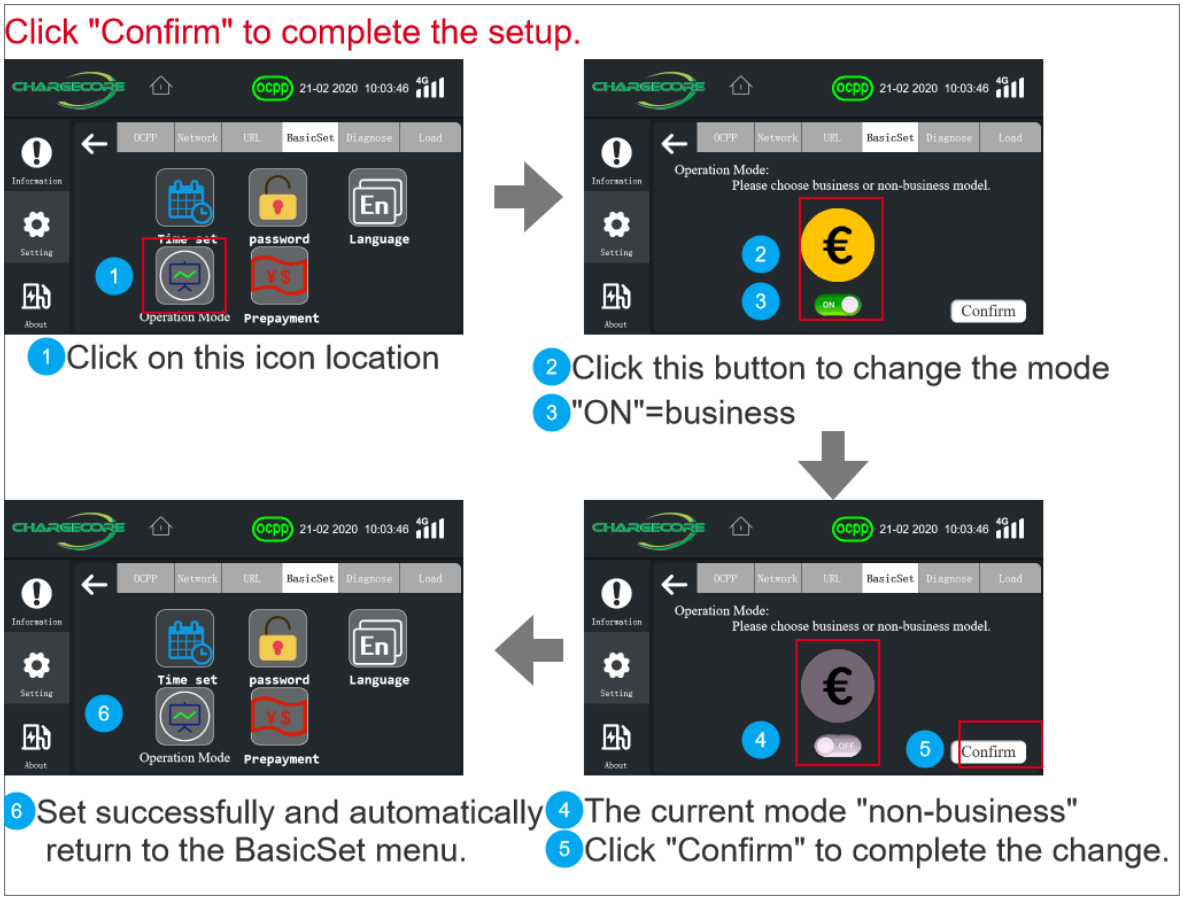

FORCED UNPLUG&RECOVERY

Forced unpluging of the charging outlet is prohibited during charging!

If the normal stop operation does not stop, it is recommended to press the emergency stop button.

Then manually unlock, prohibit forced pull-out of the outlet.

SET UP

CONFIGURE / RECORD / ALERT / OTHER ACTION

Set up the action diagram

Change password.

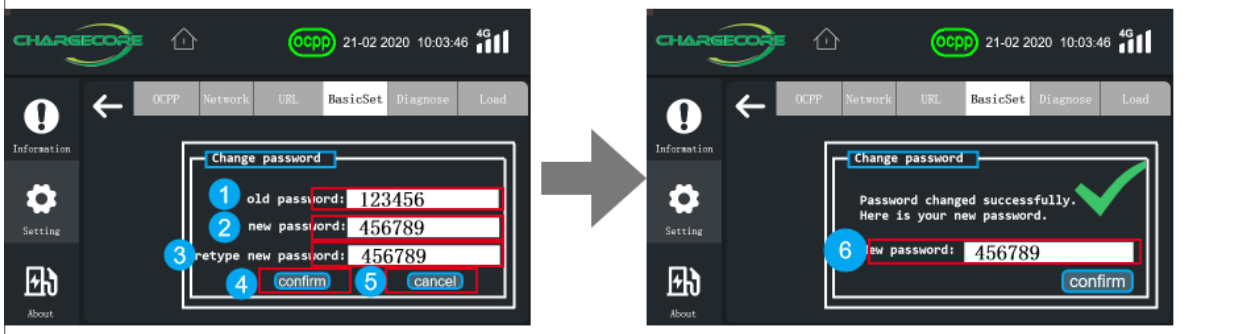

1 input old password

2 input new password

5 Cancel password change

3 Re-enter the password to confirm

4 Click "Confirm" to complete the change.

6 Password changed successfully, New password.

Switch to Ethernet mode:

Automatically mode:

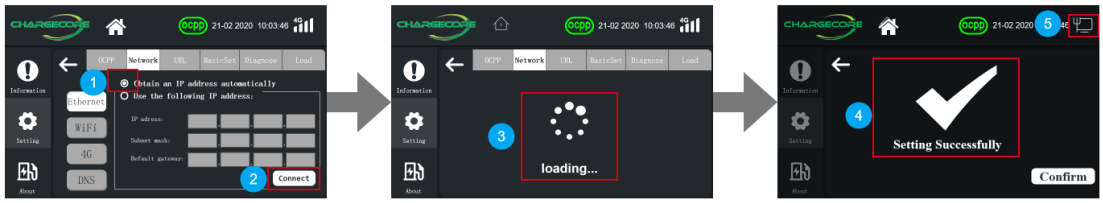

1 The current mode:automatically.

2 Click "Connect "...

3 Loading...

4 Setting Successfully.

5 Ethernet Icon.

Using static IP addresses mode:

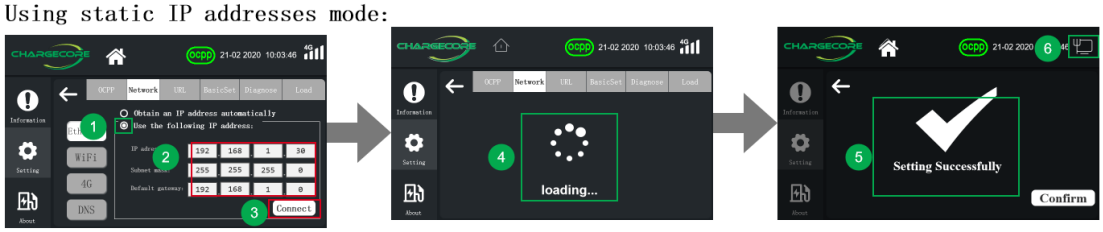

1 Use static IP addresses mode.

2 Enter the IP address...

3 Click "Connect "...

4 Loading...

5 Setting Successfully.

6 Ethernet Icon.

Switch to WiFi mode:

If the WiFi list is empty, please refresh the WiFi list first:

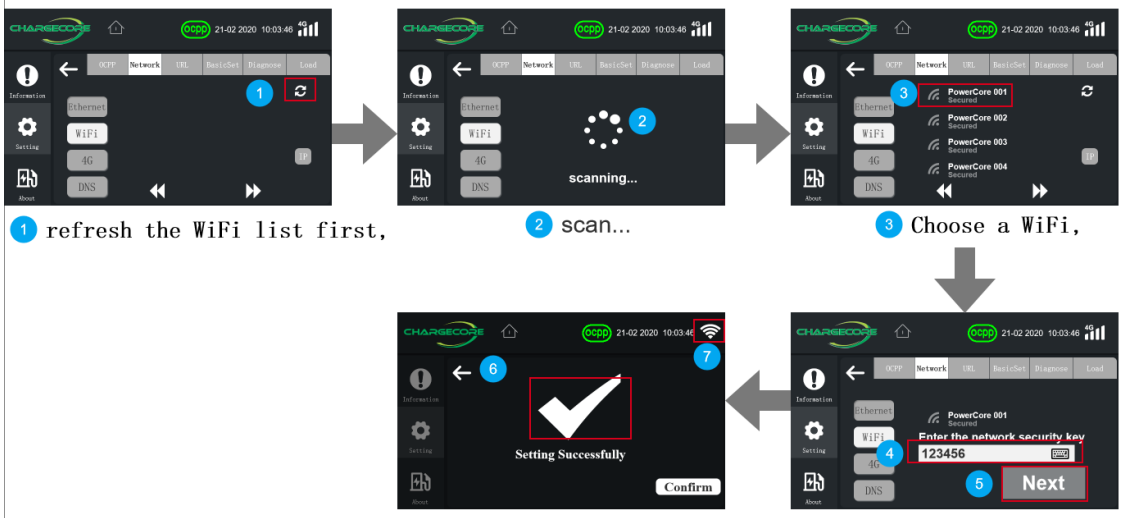

1 refresh the WiFi list first,

2 scan...

3 Choose a WiFi,

4 input password.

5 Click "Next" to connect wifi

6 Setting Successfully.

7 WiFi icon.

Switch to Ethernet mode:

Automatically mode:

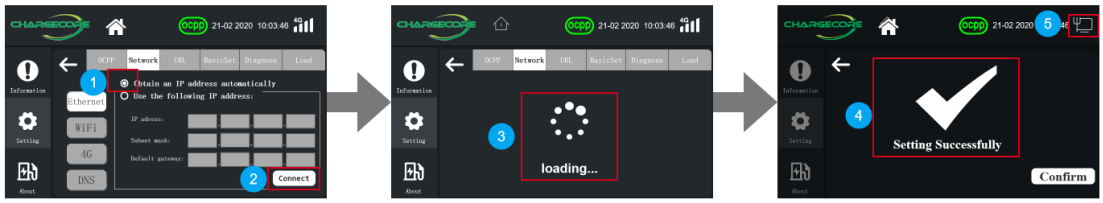

1 The current mode:automatically.

2 Click "Connect "...

3 Loading...

4 Setting Successfully.

5 Ethernet Icon.

Using static IP addresses mode:

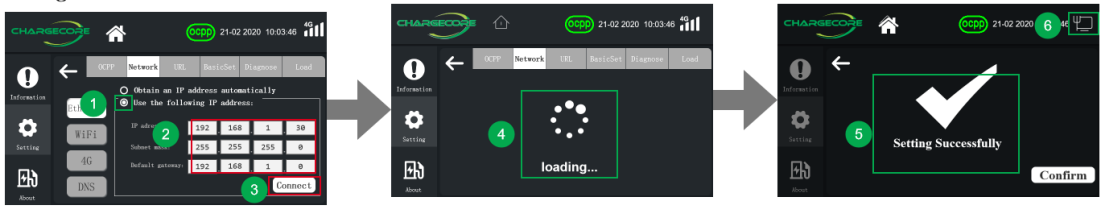

1 Use static IP addresses mode.

2 Enter the IP address...

3 Click "Connect "...

4 Loading...

5 Setting Successfully.

6 Ethernet Icon.

Switch to WiFi mode:

If the WiFi list is empty, please refresh the WiFi list first:

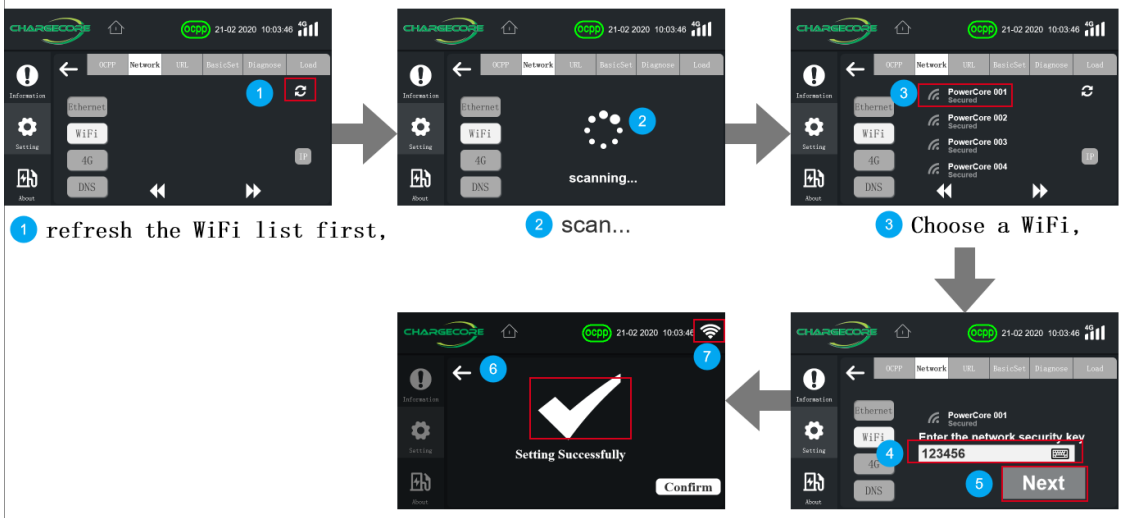

1 refresh the WiFi list first,
2 scan...
3 Choose a WiFi,
4 input password.
5 Click "Next" to connect wifi
6 Setting Successfully.
7 WiFi icon.

Switch to 4G mode:

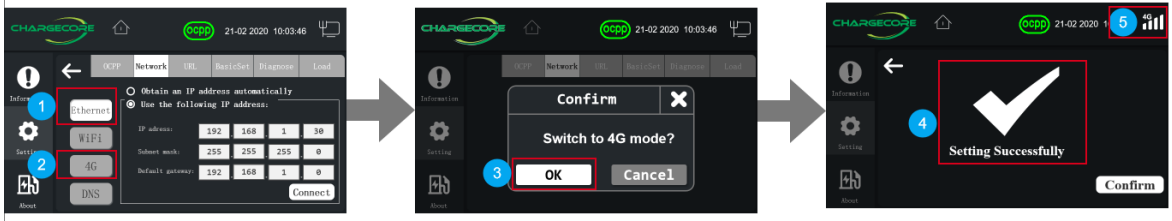

1 Current network mode:Ethernet.
2 Click "4G" to switch to 4G mode
3 Click "OK"
4 Setting Successfully.
5 4G Icon.

Set DNS:

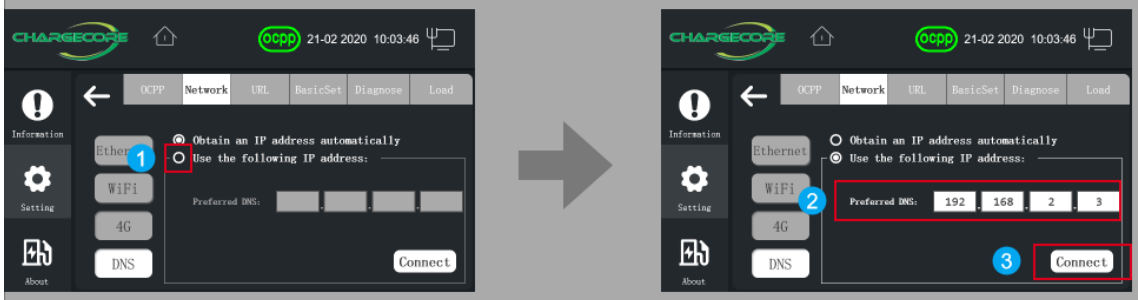

1 Click "Use the following IP address:"
2 Input DNS address:
3 Click "Connect".

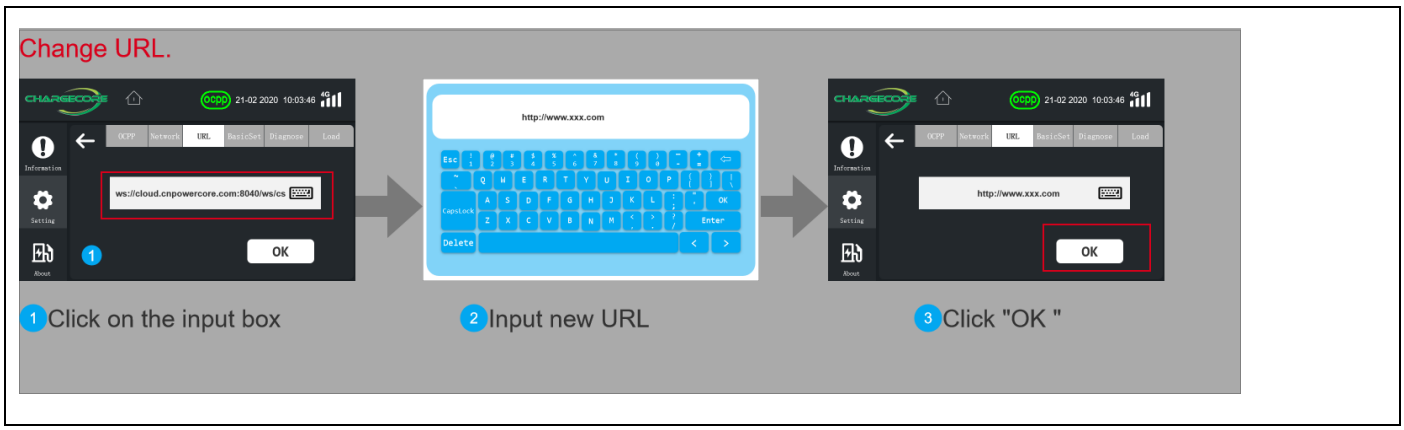

CHECK DEBUGGING

Before starting the commissioning work, The following conditions need to be prepared and validated:

- All preparation, construction, installation, connection and so on have been completed
- The charger input power supply has been connected and the charger power-up capacity is already available
- If there is no 3G/4G signal, the network needs to be connected via a network cable
- The site needs to be staffed by a full-time security officer for safety supervision
- Arrange the operation representative and accept the on-site guidance of charging operation

POWER-ON CHECK

- Charger connects to AC power, standby and Check the charger for fault alarm: the LED is displayed normally, and the charging module is working properly. Configure network information, check the network connection status should be normal, signal strength is appropriate and stable, no drop phenomenon.

CHARGING OPERATION

- Connect an electric car or test device, and the charger shows that the electric vehicle is connected
- Charger Swipe or APP start Charging, charger starts normally
- Check the charger is faulty Alarm, the light is OK

PLATFORM CONNECTIVITY

CONNECT TO THE CHARGECORE PLATFORM

When connected to the cloud platform of CHARGECORE, the charger can realize remote management, diagnosis, configuration, maintenance, upgrade and other functions.

CHARGECORE platform data interaction diagram

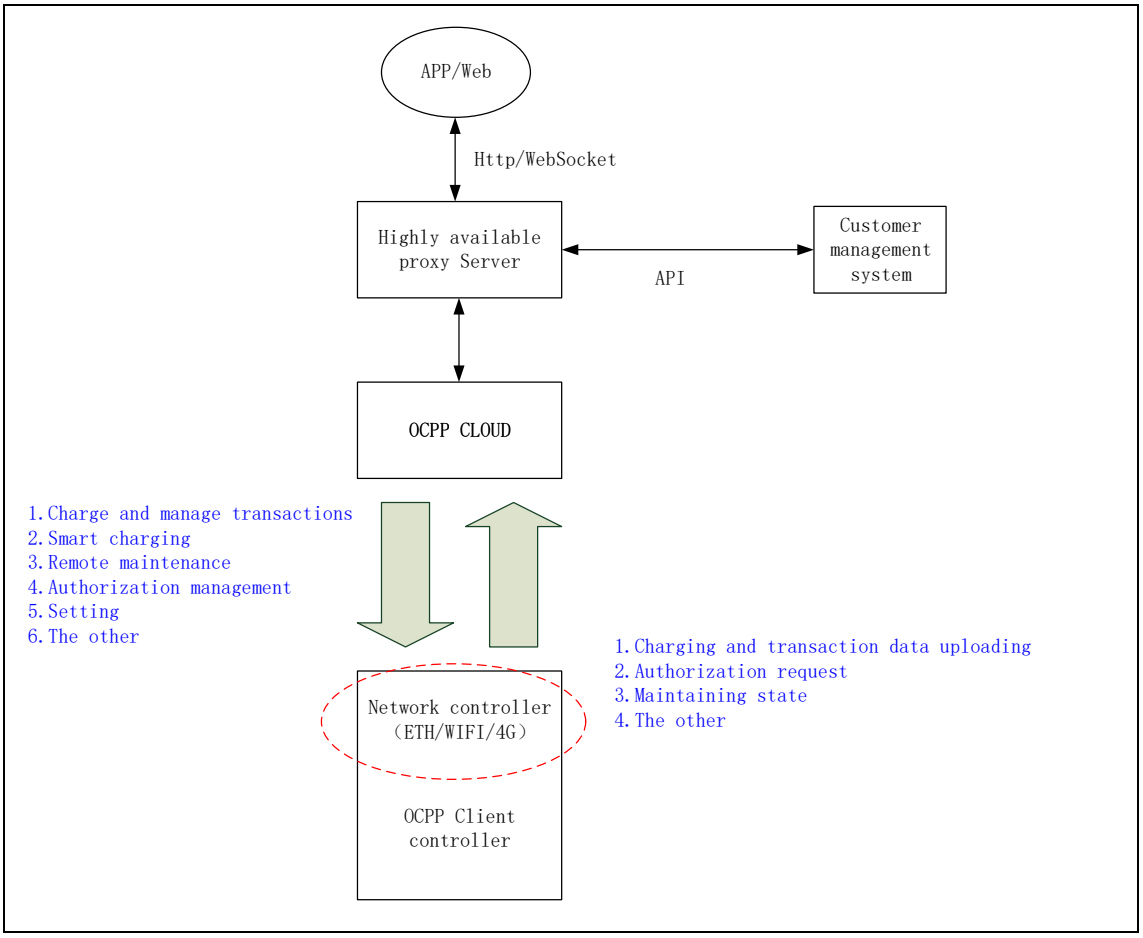

CONNECTION OPERATION

For connection platform operations, please refer to the platform operating manual or contact the CHARGECORE engineer.

CHARGECORE charger support the connect with customers through OCPP protocol with existing operating platform, please contact the CHARGECORE Sales or Service Engineer.

AFTER-SALES MAINTENANCE

AFTER-SALES SERVICE

1. Two-year warranty on all parts.

2. During this period, if any parts are damaged (damaged by quality factor), we will provide free accessories and replace them yourself.

3. One-to-one technical engineer support.

DISCLAIMER

Product equipment needs to be used within a certain range of conditions, there is one of the following circumstances leading to accident or damage, can not be responsible.

- All human factors damage and use under abnormal working environment

- Failures and damage caused by environmental use that are not used in accordance with the instructions or not directed by the instructions
- Damage caused by poor transport after delivery
- Normal use of old, wear, rupture and immersion, etc
- Products that do not belong to the Company (e.g. counterfeit goods)
- Without the consent of the Company, the company's private dismantling, repair, modification of products
- Damage caused by other irresistible forces (e.g. floods, fires, lightning strikes, typhoons, earthquakes, abnormal voltages).
- Beyond the service life of our warranty

MAINTENANCE

DAILY MAINTENANCE

Regular maintenance enables the charger to maintain a safe and stable good state, the following is the recommended maintenance period, customers can be based on the use of the environment and frequency of self-defined maintenance cycle and content.

The item that needs to open the door must be carried out in standby and, if necessary, the power input needs to be disconnected.

REGULAR MAINTENANCE

- monthly
  - Check the verticality of the charger
  - The degree of dirt on the outer surface
  - Damage to the paint surface
  - Use of charging outlets and cables
  - LED, display status
- Quarterly
  - Ground screw, ground resistance (no greater than 1Ω).
  - The module indicator is OK, no abnormality, alarm
- semiannually
  - Fixed ground foot screw bolt tightening force
  - Check the air filter cotton and dust net, according to the air filter ventilation capacity to determine whether the need to blow or replace the corresponding accessories
- annually

- Check the one-time leakage protection device (in standby).
- Check the cabinet paint, sheet metal for rust, water stains
- The state of use of internal components

ON-SITE MAINTENANCE

This device is an Internet of Things-type charger, with pre-charge self-test, daily regular self-test, online monitoring of electrical parts and operating parameters and other intelligent functions.

- It's working, just routine maintenance, no overhaul maintenance
- Run exceptions, refer to subsequent fault handling, and promptly contact the customer service center or local supplier

REMOTE MAINTENANCE

Charger have the function of connecting to the device cloud platform to monitor the status of the Charger in real time. When connecting the Canrese platform, the platform can provide perfect remote diagnosis, remote service, remote upgrade services, can timely find and locate the actual operation process of the actual problems, according to which to provide the corresponding solutions to help the operation center to achieve remote services, can remotely upgrade software, solve end-user problems, to achieve unattended operations.

- The system self-tests daily, if there is an exception escalation background
- If there is an abnormal operation, please contact the customer service center or local supplier in a timely manner
- Can be comparable service engineers can query logs, update configuration and procedures, remote management, diagnosis, configuration, upgrade and other remote maintenance actions.

ILLUSTRATE

DURING INSTALLATION, REPAIR AND REPLACEMENT OF SPARE PARTS

- Live work is strictly prohibited
- Unauthorized dismantling is strictly prohibited
- Operate the equipment and be sure to ensure safety
- Access to the power supply line should be followed in the PE ground -> zero-line -> phase line order
- All operations must comply strictly with the relevant safety standards

AFTER INSTALLATION, REPAIR AND REPLACEMENT OF SPARE PARTS

- Refer to the installation and maintenance requirements for acceptance and testing
- Organize and collect your own tools to restore the internal switch of the device to working
- Lock the safety door so that the device is operating safely

APPENDIX

THE SCREEN ICON EXPLAINS:

UNIVERSAL Green Group	Logo		The outlet is not inserted
	Power on progress bar		Plug in
SOC Unit: %	Charging mode selection: soc, % per unit		Charged
	Charging (animation)		The charge is complete
	In load (animation)		Has been booked
ocpp	Ocpp is connected		There is a fault in the charging
ocpp	Ocpp is not connected		Charging outlet is not available
	The wired network is not connected		Billing settlement
	Wired network connection		The screen is heated
	The wired network is connected		The screen is not heated
	Wifi is not connected	Type2	European ac standard
	Connect wifi	GBT/AC	National ac standard
4G	4g is not connected	Type1	U.s. ac standard
4G	4g is connected		Error, go to the administrator interface to see the fault item
	No fault	€	Enable operation mode mode to save each charging record.
	There is a problem	€	Eunable operating mode, no charging records.

FAULT ELIMINATION OPERATIONS (CAUSE AND RESOLUTION).

No.	The status of the display	Possible cause	Suggested treatment
1	The display is black and cannot be lit by touch.	The charger ac input is not powered.	Check that the charger input power supply is ok: AC three-phase input voltage of about 230v per phase, line voltage of about 400v. Whether the input cable is leaking and short-circuited. If the check input is all right, please try power-off restart, if the fault is still not corrected, please contact our service personnel to deal with.
2	Display flower screen, white screen, can not display information correctly.	Charger run 24 hours a day, display crashes, rarely.	Try a power-off restart, if the fault is still not corrected, please contact our service personnel to deal with.
3	Display: the charging outlet cannot be locked.	The charging outlet plug is not connected to the charging port of the car or the charging outlet electronic lock is faulty.	Try unplugging the charging outlet again. If the problem is still not corrected, please contact our service personnel to deal with.
4	Display: the charging outlet cannot be unlocked	The charging outlet electronic lock is faulty or stuck.	Users can manually unlock the cable from the charging outlet head to leave the site, customer operations personnel should contact our service personnel for further processing.
6	The others above do not address the issue. There may be more reasons, please contact our company.		

THE WHOLE MACHINE ELECTRICAL DIAGRAM

Electrical principle diagram (schematic).

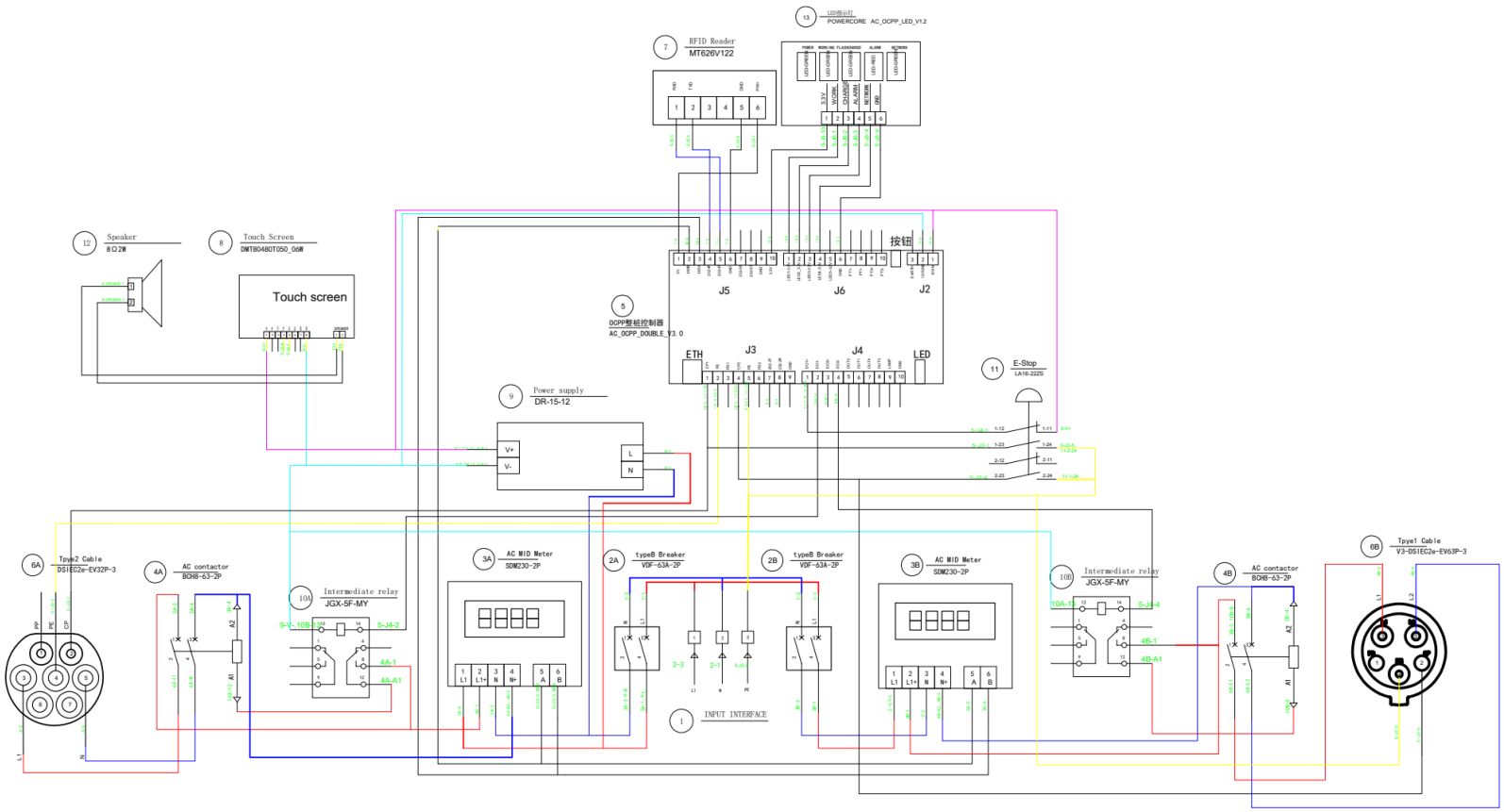

*6A(EUR) /6B(US) Plug shape is different, the plug name and definition are consistent, the wiring is the same.

This device complies with Part 15 of the FCC Rules. Operation is subject to the following two conditions: (1) this device may not cause harmful interference, and (2) this device must accept any interference received, including interference that may cause undesired operation.

Changes or modifications not expressly approved by the party responsible for compliance could void the user's authority to operate the equipment.

This equipment has been tested and found to comply with the limits for a Class A digital device, pursuant to part 15 of the FCC Rules. These limits are designed to provide reasonable protection against harmful interference when the equipment is operated in a commercial environment. This equipment generates, uses, and can radiate radio frequency energy and, if not installed and used in accordance with the instruction manual, may cause harmful interference to radio communications. Operation of this equipment in a residential area is likely to cause harmful interference in which case the user will be required to correct the interference at his own expense.

MPE Requirements

To satisfy FCC RF exposure requirements, a separation distance of 20 cm or more should be maintained between the antenna of this device and persons during device operation.

To ensure compliance, operations at closer than this distance is not recommended.