FlexiSpot

Massage Chair
OM100/OM101
Instruction Manual

Before operating this unit, please read these instructions completely.

CONTENTS

Before Use

1. IMPORTANT SAFETY INSTRUCTIONS 3

2. PREPARATION BEFORE USING 8

- ENVIRONMENT CHECKING 8
- MOVE THE CHAIR 8
- MASSAGE CHAIR COMMISSIONING 11
- FIOOR PROTECTION 12

3. PRODUCT STRUCTURE 13

How to Use

4. OPERATIONS 15

- ON/OFF INSTRUCTIONS 15
- CONTROLLER MENU 19
- REMOTE CONTROLLER 20
- QUICK ACCESS CONTROL PANEL 25
- BLUETOOTH INSTRUCTIONS 26
- GROUNDING INSTRUCTIONS 27

Q&A/Important

5. CARE AND MAINTENANCE 28

• STORAGE 28

• MAINTENANCE 28

6. TROUBLESHOOTING GUIDE 30

7. PRODUCT SPECIFICATION 33

8. FCC STATEMENT 34

1 IMPORTANT SAFETY INSTRUCTIONS

The following Safety Instructions are of great help to your correct use of this massage chair.

- **READ ALL THE INSTRUCTIONS** and cautionary markings in this manual. Follow the instructions and keep the owner's manual for future reference.
- **NOT FOR CHILDREN.** This device can only be used by individuals over 16 years old and people with reduced physical, sensory or mental capabilities or lack of experience and knowledge if they have been given supervision or instruction concerning use of the appliance in a safe way and understand the hazards involved. Don't allow the device to be used as a toy. Close attention is necessary when used by or near children. Children should be supervised to ensure that they don't play with any devices or cords.
- **USE ONLY AS INSTRUCTED.** Use this device only as described in this manual. Any misuse excludes any liability for damage, incorrect use may cause electric shocks, fires, burns, or other unexpected hazards. To clearly indicate the degrees of danger and damage, the classes of accidents caused by incorrect use are classified into DANGER, FORBIDDEN, WARNING and CAUTION. Instructions marked as followings should be strictly followed.

⚠ DANGER

To reduce the risk of electric shock,

- A massage chair should never be left unattended when plugged in. Always switch off the power and remove the plug from the mains socket immediately after use and before cleaning.
- To avoid fire disaster or damage to the massage chair,

please don't use the power supply that is beyond the specified electric voltage.

- Close supervision is necessary when this massage chair is used by, on, or near children, invalids, or disabled people. Keep children and pets away from reclining backrest and legrest.

⚠ FORBIDDEN

- Don't allow children and pets to play near the chair especially during operation.
- Don't leave mobility impaired or speech impaired people alone in the chair.
- Don't place or stock this machine near damp places such as swimming pools or bathrooms.
- Don't use it in an environment which is dusty, greasy or lacking oxygen.
- Don't place it near a steam oven, open fire, or heat.
- Don't place it directly in the sun.
- Don't use outdoors.
- Don't press by force on the massage rollers.
- Don't stand on or in the chair, never store heavy items on the chair. Use only while seated.
- Don't sit on the backrest, legrest, or armrest to avoid accidental injury or machine damage.
- Don't use an electric blanket while using the massage chair.
- Don't operate with more than one user.
- Don't massage when your body is wet, moist or with bare skin, wear suitable clothing.
- Don't use it while smoking.
- Don't use it immediately after meals or after drinking alcohol.
- Don't use head ornamentation.
- Don't stumble over electrical wires or connections.

⚠ WARNING

To reduce the risk of burns, fire, electric shock, or injury to the users,

- Don't operate any equipment with damaged parts.
- Don't use attachments not recommended by the manufacturer. Any other use not recommended by the manufacturer may cause electrical shock or injury.
- Before using, please uncover the back cushion to check whether backrest or fabric is damaged, if damaged, please stop using this massage chair immediately, and contact Mynta Customer Support Team.
- Never operate this massage chair if it has a damaged cord or plug, if it is not working properly, if it has been dropped or damaged, contact Mynta Customer Support Team.
- Operate the massage chair on flat ground only.
- Connect this appliance to a properly grounded outlet only. See Grounding Instructions.
- To disconnect, turn all controls to the off position, then remove the plug from the outlet.
- Keep the cord away from heated surfaces.
- Keep the cord out of heavy traffic areas.
- Don't carry this massage chair by the supply cord or use the cord as a handle.
- Don't unplug the power plug or operate the controller with damp hands, and don't put heavy objects on the tablet —controller.
- When removing the power plug, please hold the insulation plug, don't pull the power cord.
- Don't put your hands or head under the chair.
- Only users less than 265 lbs are acceptable.
- Empty pockets and remove all your arm jewelry and watch before using.
- Don't operate under a blanket or pillow. Excessive heating can occur and cause fire, electric shock or injury.
- Don't operate the massage chair with the air openings blocked. Keep the air openings free of lint, hair, and the like.

- Don't drop or insert any object into any openings.
- Don't operate where aerosol (spray) products are being used.
- Don't remove the back cushion and play with the roller mecha - nism.
- Don't remove the bottom seat and play with actuators.
- Don't touch or re-wire the wires connected to the master-box.
- Don't attempt to repair or adjust any electrical or mechanical functions on this unit. Doing so will void the warranty.
- When using the massage chair, ascertain that the legrest is in the lowest position.
- When adjusting the legrest or backrest, please don't exert exces - sive force on it; in addition, keep children and pets well clear.
- Don't use other therapeutic equipment together with this mas - sage chair.
- Don't use over insensitive skin areas or in the presence of poor circulation. The unattended use of heat by children or incapacitat - ed peoples may be dangerous.
- The massage chair is equipped with a heating function, so people who are insensitive to heat must use it carefully to avoid causing serious burns.
- Don't continuously use the massage chair over 30 minutes, and it is limited to massage a particular part of the body in 5 minutes.
- Don't sleep on the massage chair when the massage chair is working.
- During use, if you feel uncomfortable, please stop using immediately and consult your doctor.

⚠ CAUTION

- The massage chair is designed as a non-clinical device, to soothe tired and aching muscles. It is not intended to be a substitute for medical attention.

- Each massage - even a hand massage - must be refrained from during pregnancy or if one or more of the following complaints are present in the massage area:
  - Blood stasis
  - Tumor site
  - Heart disease, with a pacemaker or defibrillator
  - Sensitive areas: head, face, cervical vertebrae, spine vertebral body
  - Positions close to the bone with less muscle coverage, the humerus, the back of the foot, the back of the hand.
- Not recommended for the following people,
  - Patients with serious hyperostosis
  - Swollen lump and patient thrombosis
  - Patients with serious heart conditions
  - Pregnant women
  - People that consume large amounts of alcohol
  - People with diabetes
  - People suffering from high fever
  - Patients with malignant tumors or malignant abscesses
  - People with distorted joints
  - People with serious skin conditions
  - People with spinal injuries
  - Minors under 16 years or people unable to control his/her behavior, i.e. mental patients, people with paralysis, etc. should not be allowed to operate the massage chair.
- It is recommended to consult a doctor before having a massage for the treatment of ailments and illnesses.
- If you are dependent on electrical aids e.g. pacemakers, MUST consult your doctor for medical advice before taking a massage.
- If your ailments and symptoms persist or worsen after use, contact your doctor immediately.
- Don’t use the chair after taking painkillers, sedatives or alcohol. Consult your doctor if you are taking medications.

2 PREPARATION BEFORE USING

ENVIRONMENT CHECKING

Don't use the chair in wet places like near a swimming pool, bath room to avoid leakage or electric shock.

Don't use the chair under sunlight or near a stove or other heating device to avoid fire or damage to leather material.

Please use chair in flat place to avoid chair falling or noise or other unexpected trouble.

Must be sure there are no children, pets or any other objects under or close to the product while using.

MOVE THE CHAIR

There are moving rollers at the bottom of the chair.

Press down the backrest as below, recline the chair to approximately 45°, hold the moving holder in the back and front to move the chair around the house with a slight pull or push.

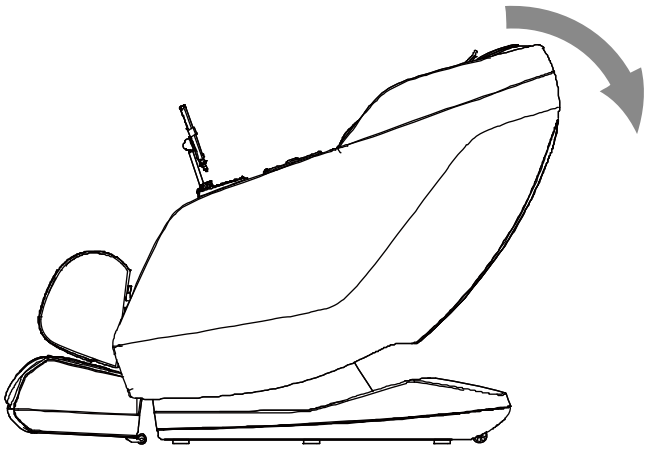

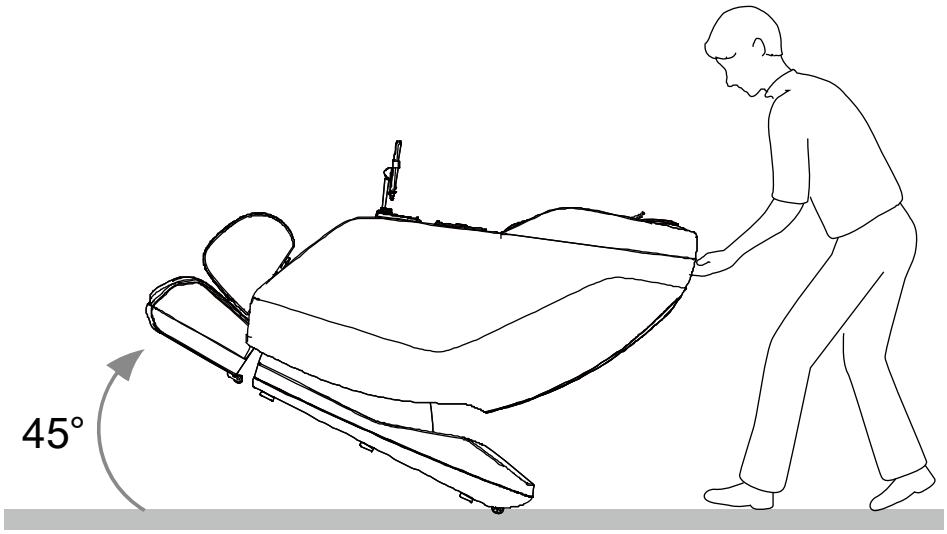

Always hold the side panels, not the base to lift up the chair.

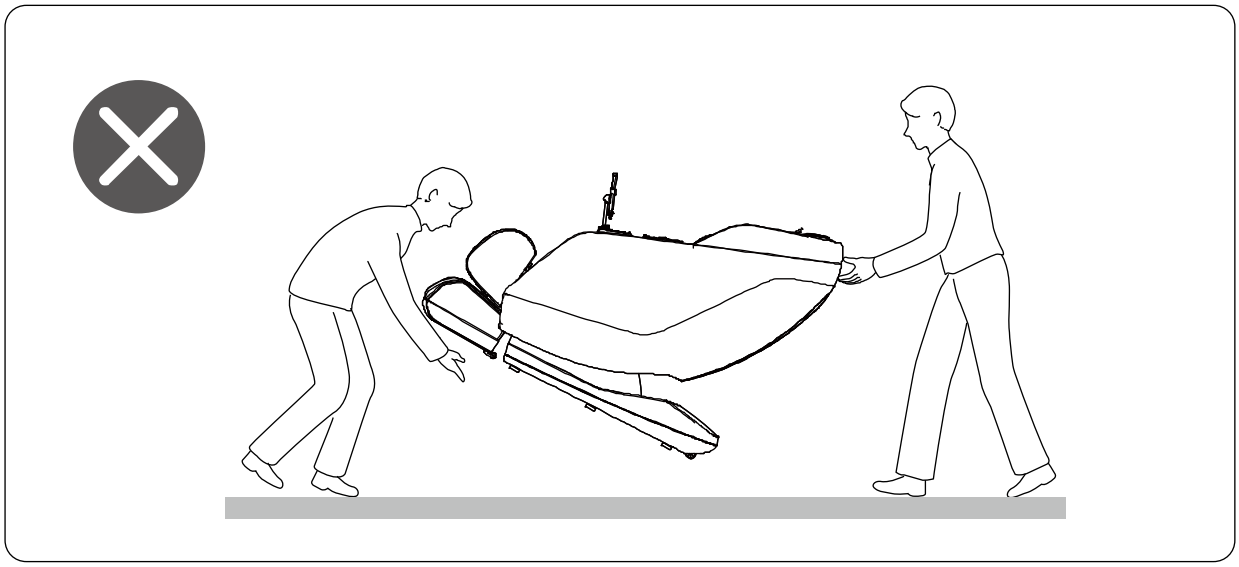

CAUTION

- Don't move the chair when there are people in it.
- Don't pull the armrest or any airbags to move the chair.
- Don't put fingers or any other objects into the gap between the seat and legrest.
- When adjusting up and down angles of the backrest and legrest, make sure there are no obstacles around the massage chair.
- During use, please make sure the power cord is not enlarged or clamped but laid orderly.
- Before sitting in the chair, make sure the chair is in its original position. If any part is not in its initial position, please power on/off again to make the whole chair go back to its original position.
- If the legrest rises up, please don't try to sit in the chair.
- Don't make the legrest suffer from heavy loading suddenly, or it may damage the legrest mechanism.

MASSAGE CHAIR COMMISSIONING

Before commissioning, please make sure there is enough space around the chair.

Back: minimum 8 inches from the wall or any other blocks

Front: allow 6 inches from any blocks for the legrest to extend.

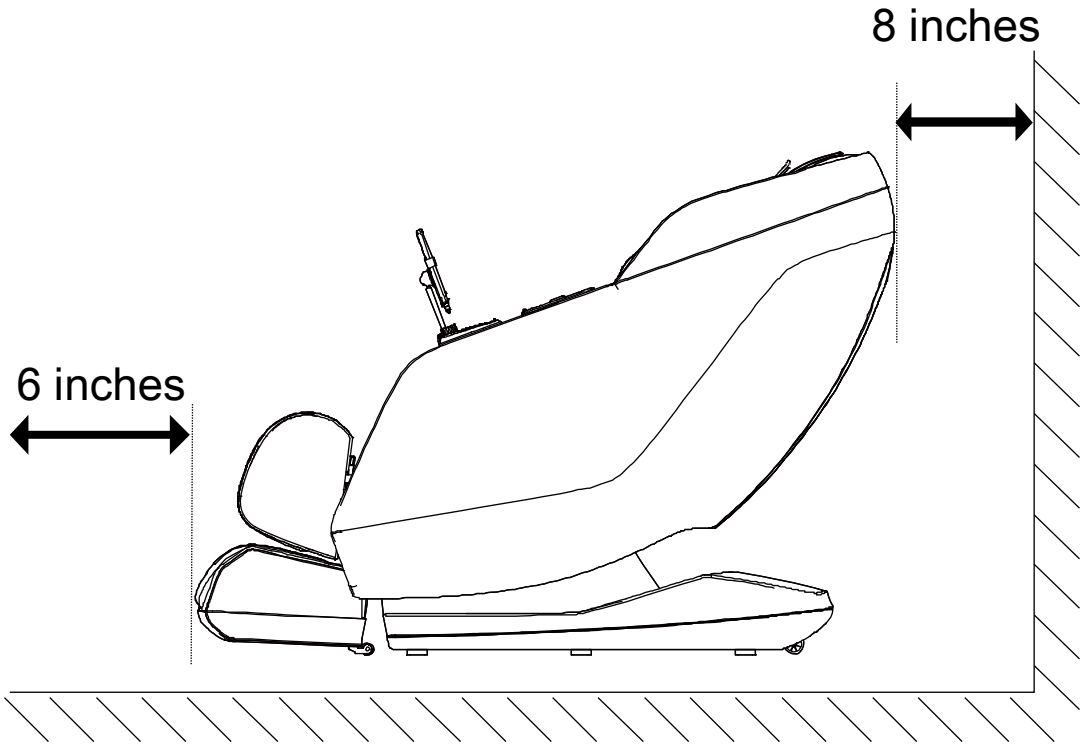

FIOOR PROTECTION

Put carpet or other pad under the massage chair, to avoid any unpredictable damage on the floor.

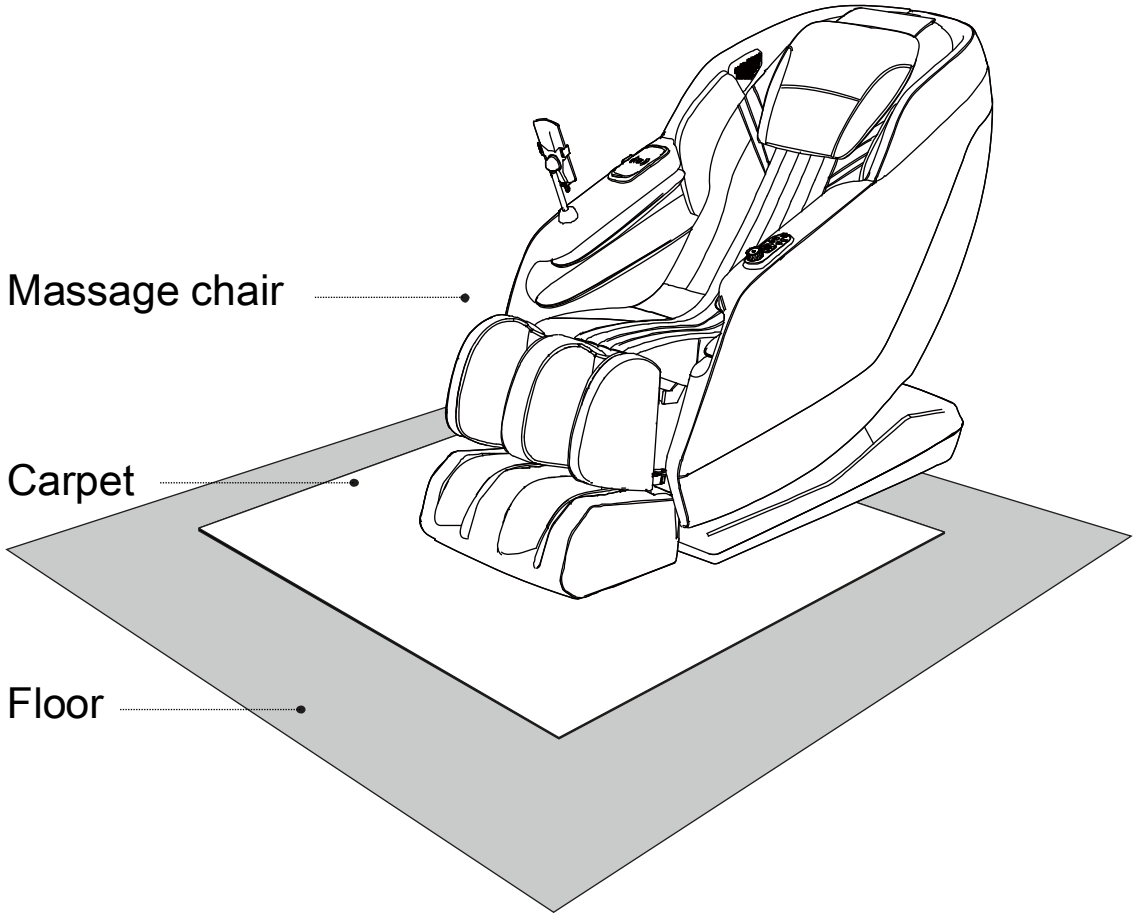

3 PRODUCT STRUCTURE

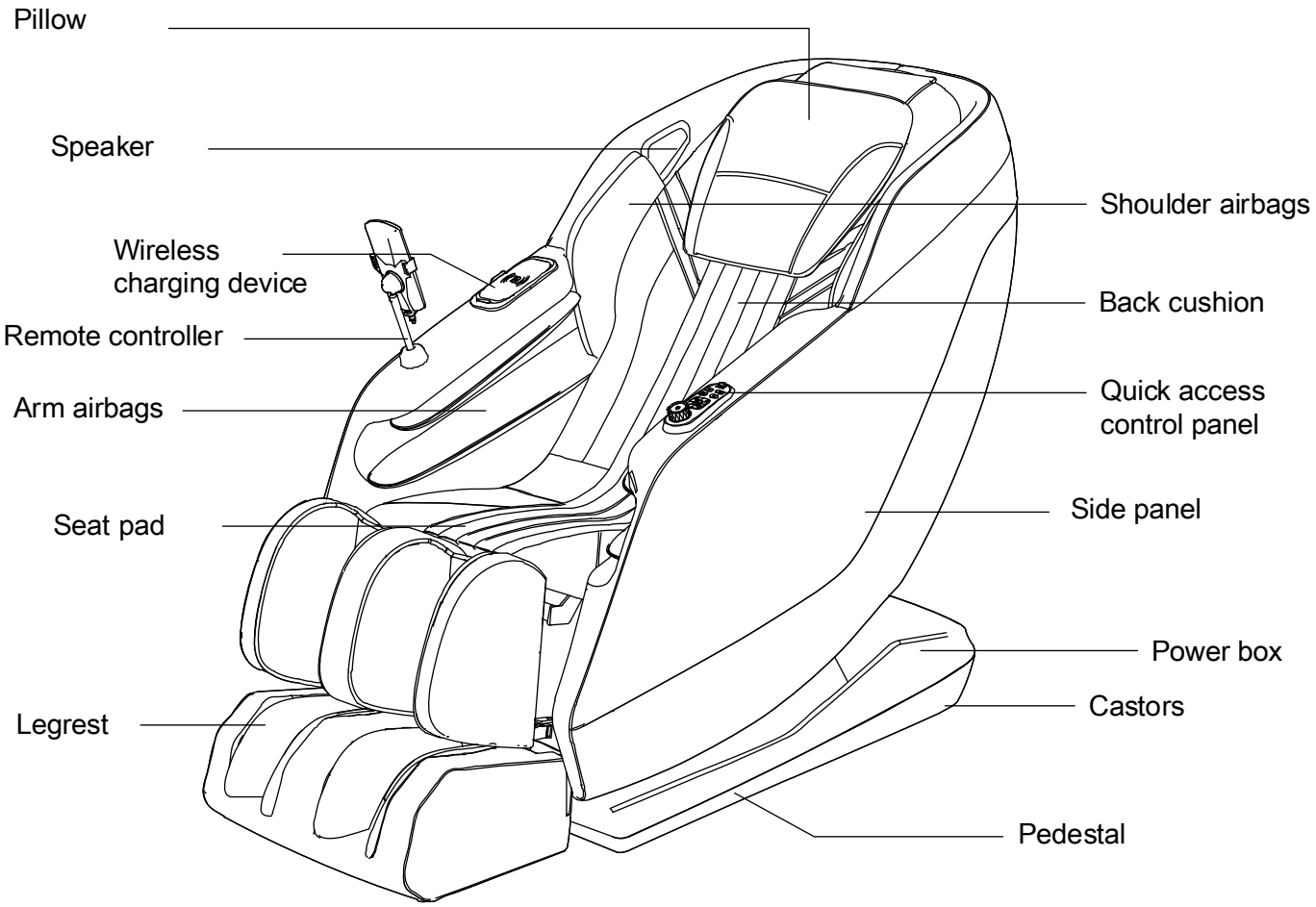

Warning: Only rated supply 110V must be used to avoid damage to electronic elements.

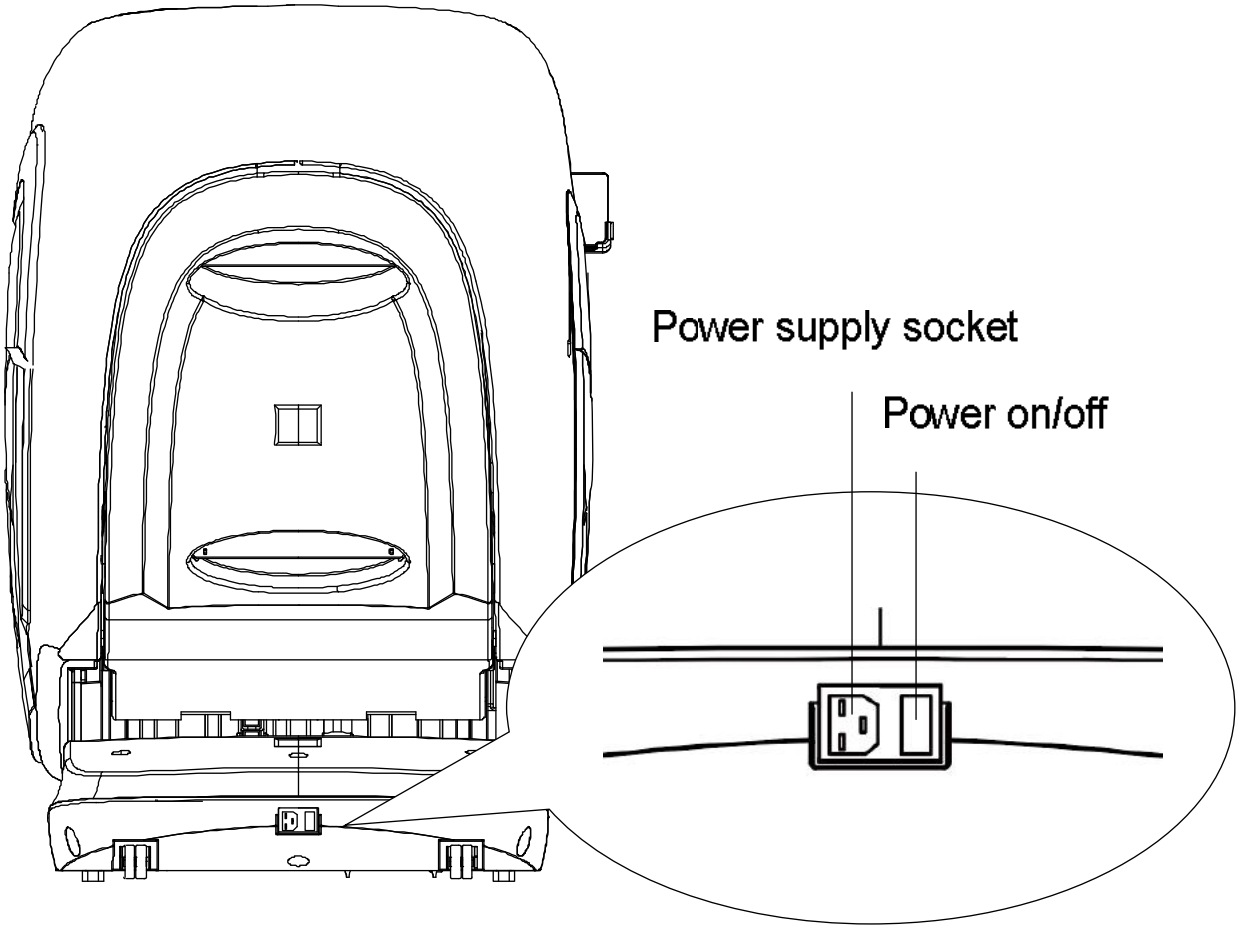

CAUTION

Don’t allow children to play on the chair in case acci - dent happens.

Always power off the chair and unplug the chair from the power supply socket after use and when the chair is not in use, so children won't get the chair started accidentally.

4 OPERATIONS

ON/OFF INSTRUCTIONS

- Make sure that the chair is in its original position before using.
- Before sitting down, make sure there is nothing pinched between the armrest, rest, backrest and the seat of the chair.
- Make sure there are no children, pets or anything else within the range of the backrest to avoid unexpected injury or property loss.
- When adjusting the backrest, be careful of the gap between the backrest and armrest.
- Empty pockets and remove all your arm jewelry and watch before using this chair.
- When the footrest is moving, please do not stand up or leave from the seat, don't stop the legrest from moving to avoid damage to the chair.

ON

- Plug the cord into the power supply socket.

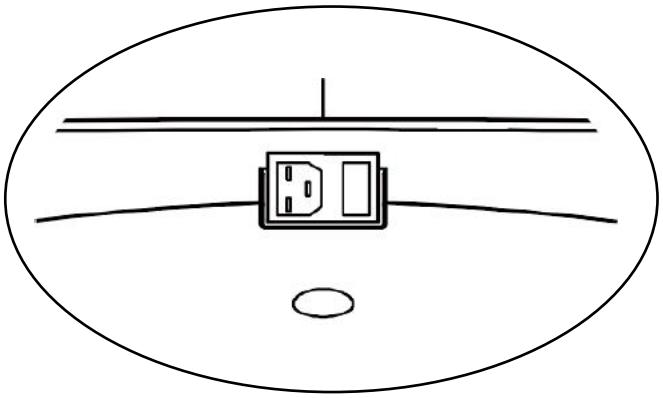

- Plug the other end of the cord into a wall outlet.

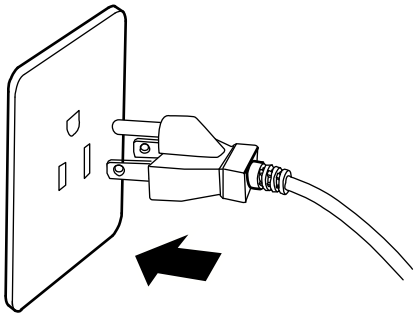

OFF

- Double check to make sure there are no people, pets or anything within the range of backrest and footrest.

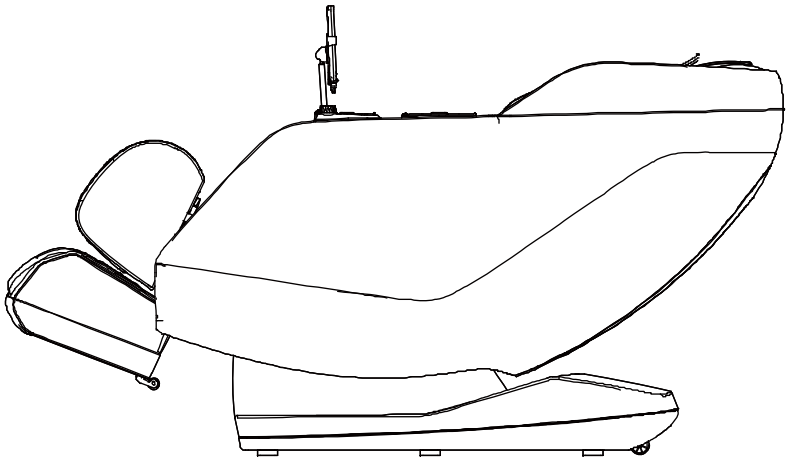

- Press ⏻ on the controller to stop massage, wait until the backrest and legrest restore to the original position.

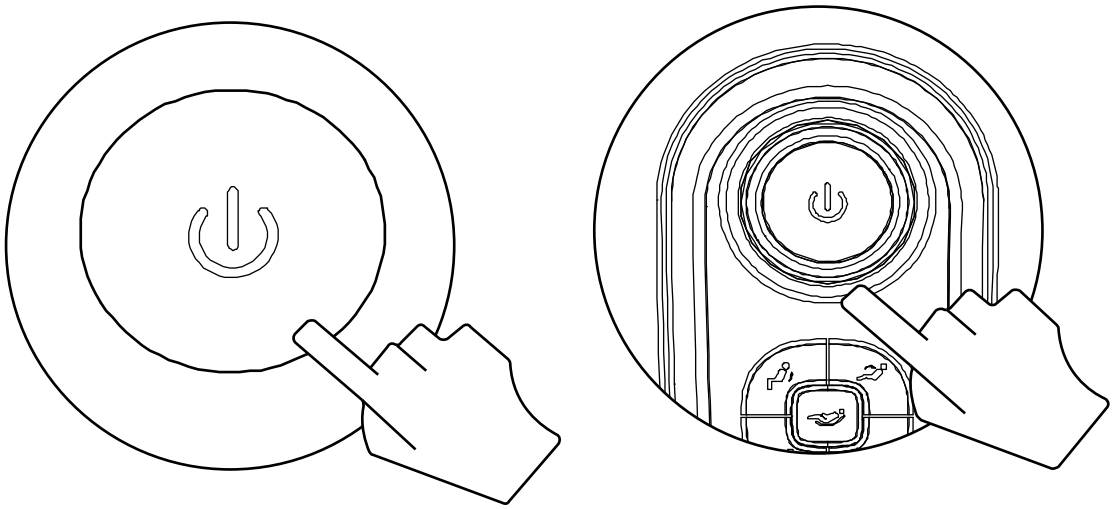

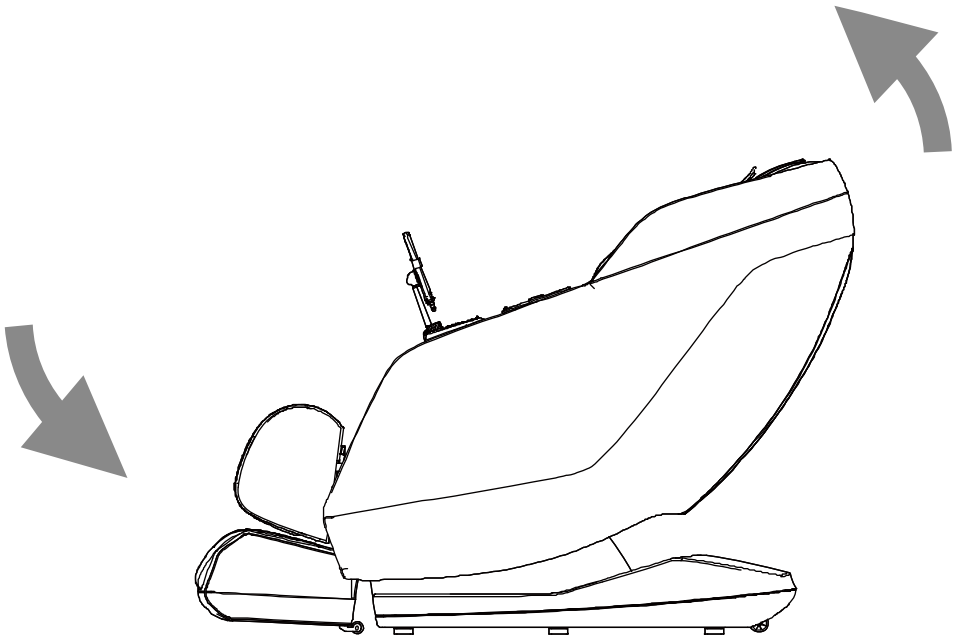

• Wait until the chair returns to the upright position.

• Switch off the power.

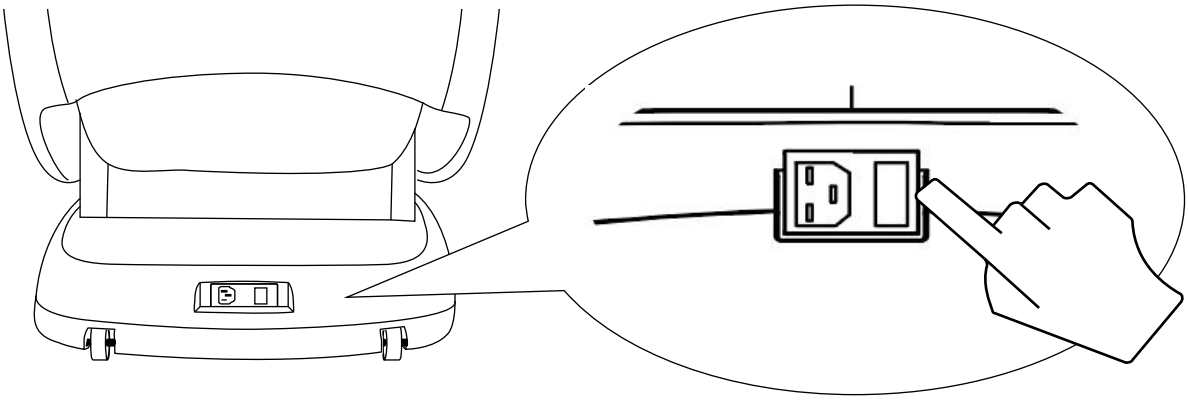

• Unplug the electricity from the socket to avoid any unex - pected hurt to children or pets.

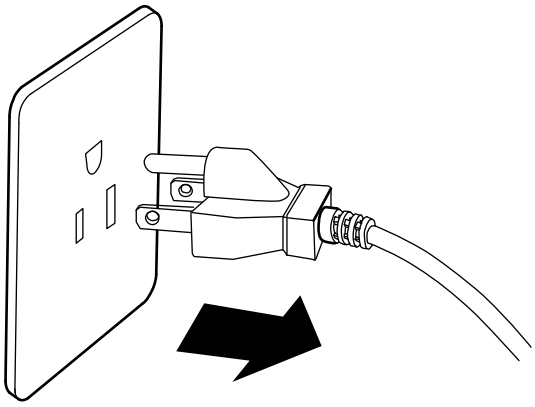

• Clean the chair if necessary.

CONTROLLER MENU

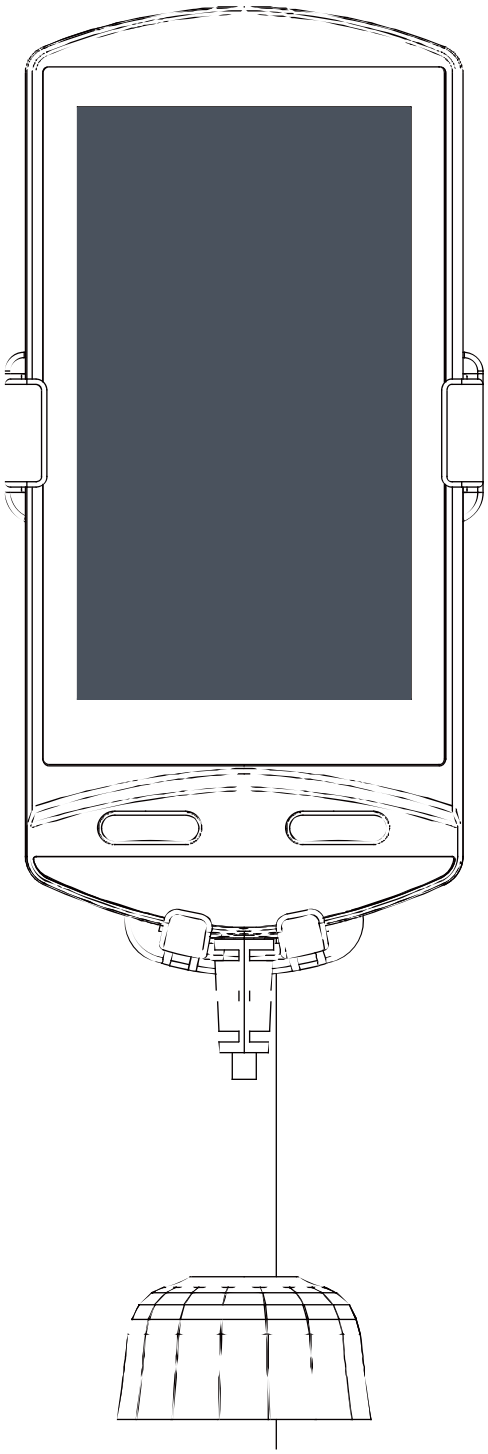

REMOTE CONTROLLER

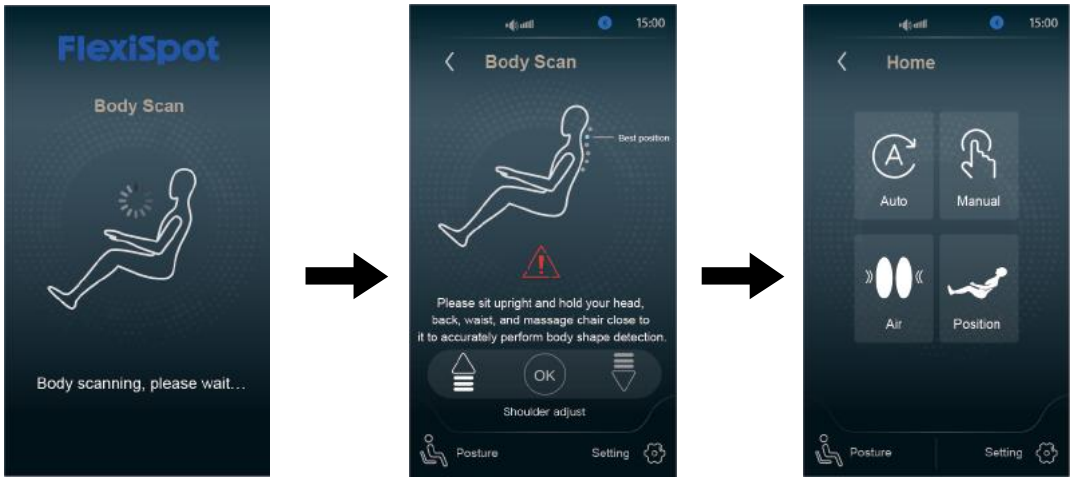

'Body Scanning'

Body scanning will commence when start massage chair, then enter 'Home' page.

Note:

Please sit as far back in the seat as possible with your head on the pillow during the scanning.

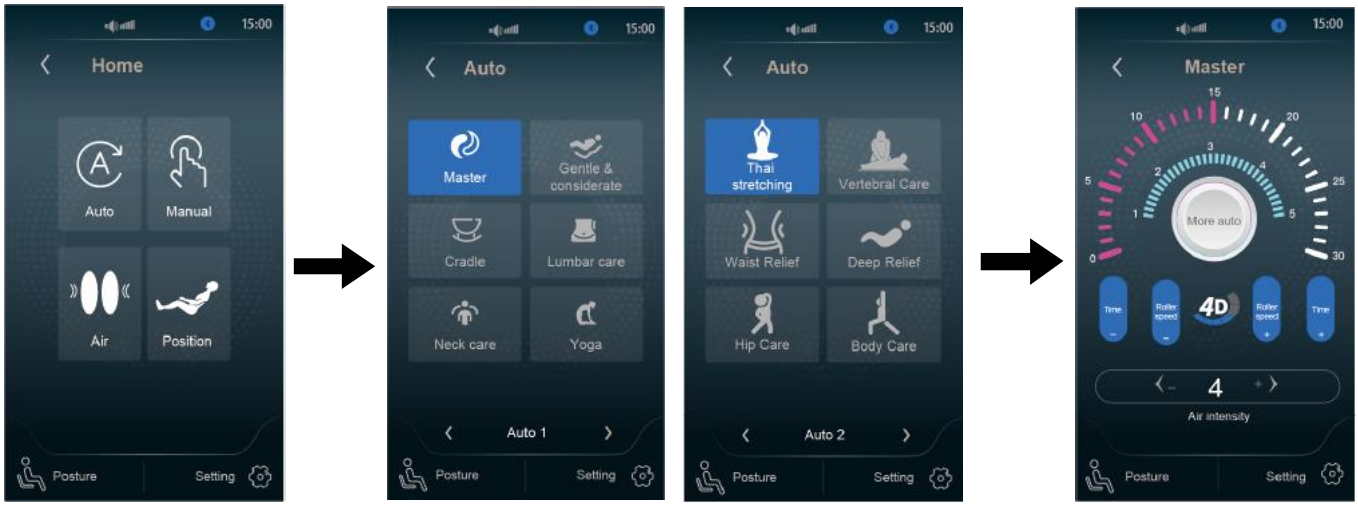

'Auto' Massage

1.Select 'Auto' function on the operation main page.

2.There are 12 massage modes to select from.

After the selection, relevant massage starts. The remote control enters the related page.

Status Display

1 . 4D : 4D movement ejection adjustment

2 . Time : Massage time adjustment

3 . Speed : Roller speed adjustment

4 . Intensity : Air massage intensity adjustment

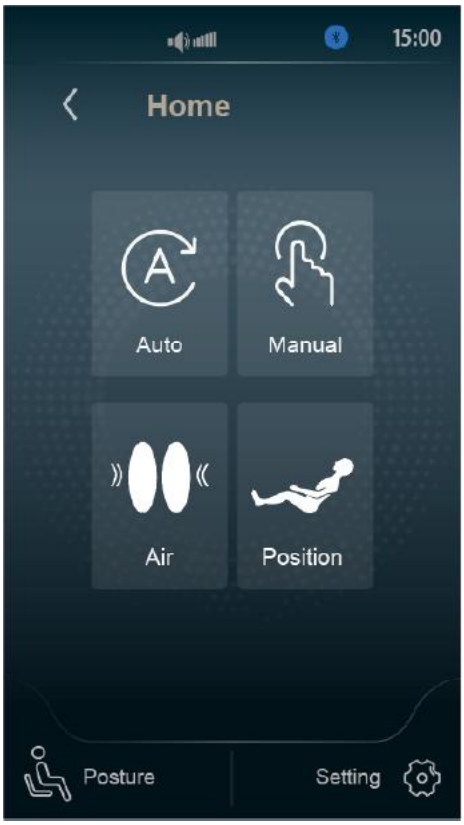

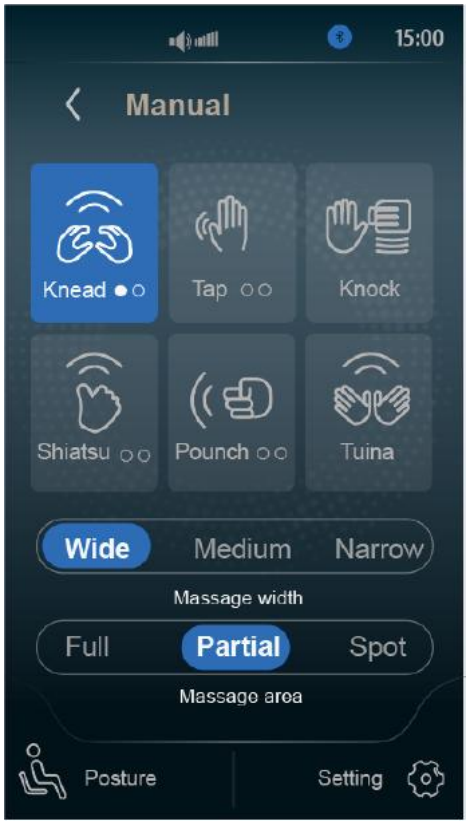

'Manual' Massage

1.Select 'Manual' function and there are 6 massage modes to select from.

2. Select Wide / Medium / Narrow to adjust the massage width, except Knead & Knock.

3. Select Full / Partial / Spot to adjust the massage area.

Note:

There are 2 modes for Knead,Tap,Shiatsu and Pounch.Press once enter mode1,press twice enter mode2,press again to return mode1.

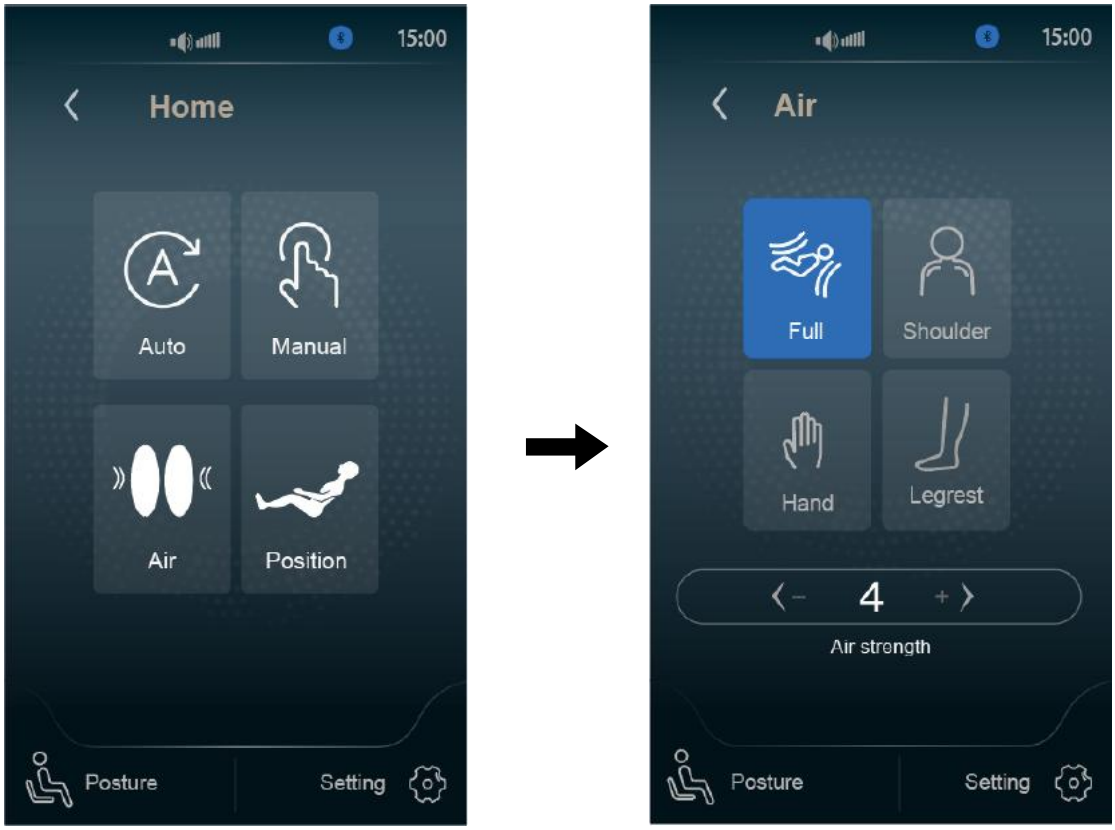

'Air'

1.Select 'Air' function on the operation main page.After the selection, enter Air page.

2. Select Full / Shoulder / Hand / Legrest to adjust the airbag position.

3. Air strength : Select air strength to adjust it.

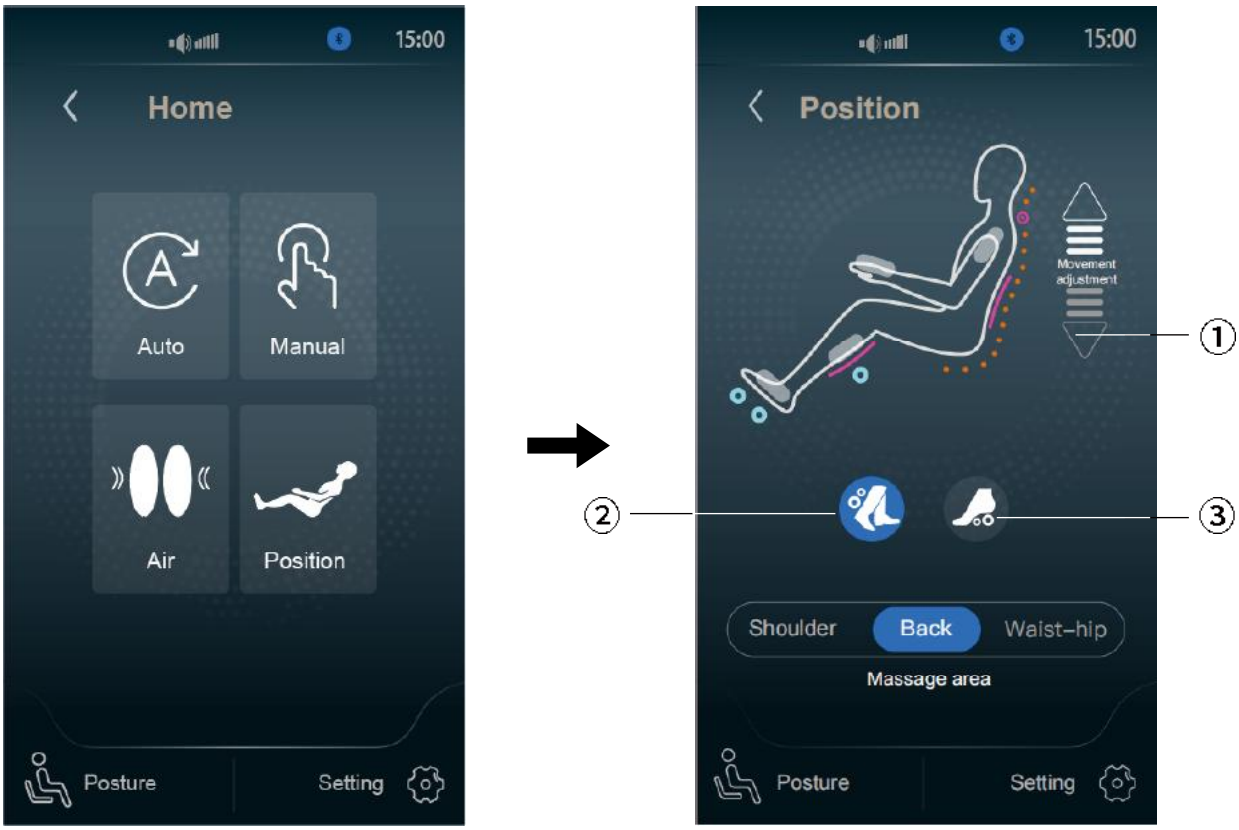

'Position'

Select 'Position' function on the operation main page.
After the selection, enter 'Position' page.

Adjustment notes

1.Movement Adjustment Key:
Press to up and down movement position.
2.Calf Kneading Key:
Press this key,first gear-second gear-third gear-off cycle in sequence.
3.Foot Roller Key:
Press this key,first gear-second gear-third gear-off cycle in sequence.
4. Select Shoulder/Back/Waist-hip to adjust the massage area.

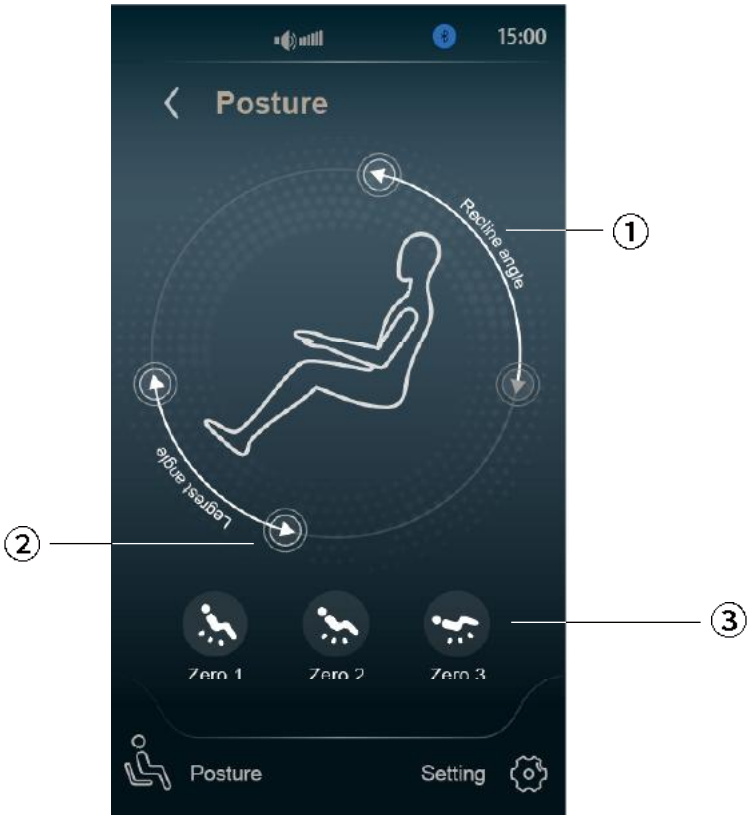

'Posture'

1. Recline Angle Key:
   Press to raise or recline the backrest.
2. Legrest Angle Key:
   Press to lift or lower the legrest.
3. Zero Gravity Key:
   Select Zero1/Zero2/Zero3 to adjust zero gravity.

'Setting'

1. Brightness adjustment of the screen.
2. Turn on/off keytone.
3. Turn on/off the heating.
4. Shoulder detection function.
5. Language Selection (English).

QUICK ACCESS CONTROL PANEL

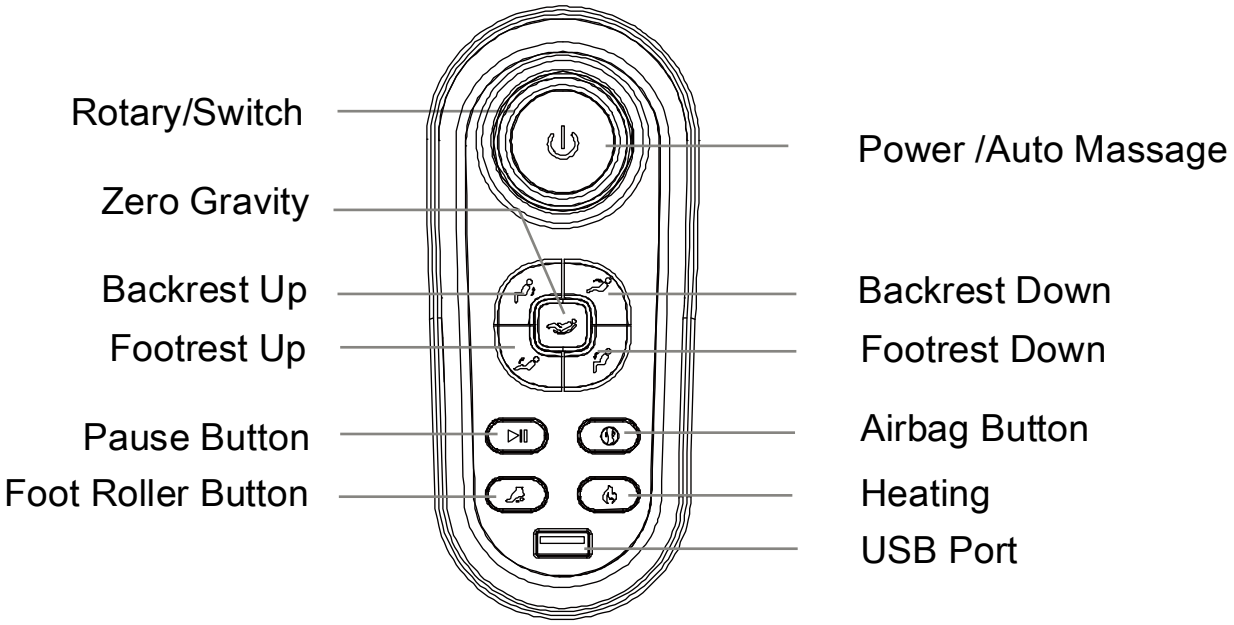

Power / Auto Massage	1.Press the button to reset massage chair. 2.Long-press this button to enter to the startup state,enter body scanning. In the power-on state,long-press this button again to turn off the massage chair. After the chair is restored to original position,the machine can be restarted again.
Rotary/Switch	Rotate this switch clockwise,and the automatic program runs in sequence. Rotate this switch counterclockwise and the automatic program runs in reverse order.
Backrest Up	Press and hold to raise the backrest to upright position,release the button to stop.
Backrest Down	Press and hold to recline the backrest, release the button to stop.
Zero Gravity	Adjust the gears of zero gravity:first gear-second gear-third gear,cycle in sequence.

QUICK ACCESS CONTROL PANEL

Footrest Up	Press and hold to raise the footrest to upright position; release the button to stop.
Footrest Down	Press and hold to recline the footrest; release the button to stop.
Pause Button	Press this button to stop all the massage function.
Airbag Button	Press this button to cycle in sequence, foot &leg airbag,armrest airbag,shoulder airbag,airbag off.
Foot Roller Button	Press this button to turn on/off foot roller.
Heating	Press this button to turn on/off the heating function.
USB Port	Plug a USB cable into this interface for charging.

BLUETOOTH INSTRUCTIONS

Play Mobile Music/Bluetooth speaker:
Turn on Bluetooth of mobile, then select Bluetooth device of massage chair(FlexiSpot-MC057). Once paired, it can act asspeaker when mobile phone is playing music.(Remarks: No Password)

GROUNDING INSTRUCTIONS

This product must be grounded. If it should malfunction or breakdown, grounding provides a path of least resistance for electric current to reduce the risk of electric shock This product is equipped with a cord having an equipment-grounding conductor and a grounding plug. The plug must be plugged into an appropriate outlet that is properly installed and grounded in accordance with all local codes and ordinances.

DANGER- Improper connection of the equipment-grounding conductor can result in a risk of electric shock. Check with a qualified electrician or serviceman if you are in doubt as to whether the product is properly grounded.
Don't modify the plug provided with the product - if it does not fit the outlet; have a proper outlet installed by a qualified electrician.

This product is for use on a nominal 110-volt circuit and has a grounding plug that looks like the plug illustrated in sketch A in the following figure. Make sure that the product is connected to an outlet having the same configuration as the plug. No adapter should be used with this product.

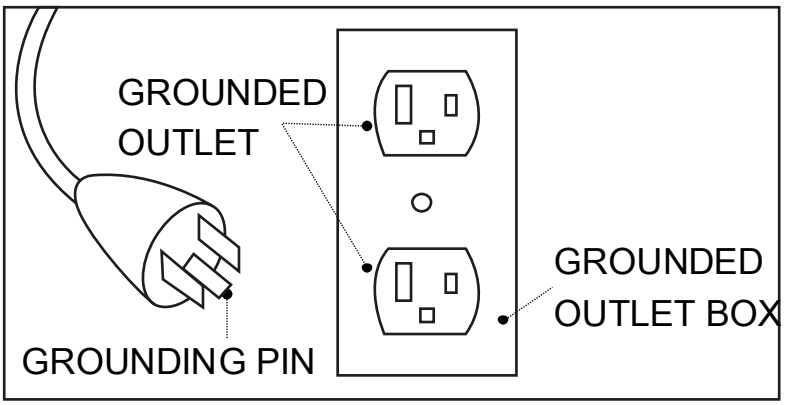

Earthing

This massage chair belongs to Level One electrical appliance, make sure to use three-core power supply socket and to guarantee the ground wire connected to the power supply socket has obtained good ground connection to avoid electric leakage, electric shock and some other negative effects during use.

5 CARE AND MAINTENANCE

STORAGE

- Please power off the chair and unplug the chair from the power supply socket when the chair is not in use, to avoid children to start the chair accidentally.
- Please disconnect the controller, store the chair carefully if is not in use for a long time.
- Do not dismount the hock of the chain.
- Keep the massage chair free of dust.
- Cover the chair with dust-free cloth to prevent dust from collecting. Do not store in a hot, humid, damp place or in direct sunlight or heat. Do not store in an overly cold places.

MAINTENANCE

Before cleaning, unplug from electrical source to avoid shock.

Synthetic leather

General cleaning

Clean with tidy, soft and dry cloth. (Chemical or medical cleaning products are forbidden)

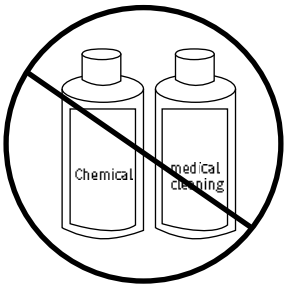

If Synthetic leather is dirty

- Dip soft cloth into 3-5% neutral detergent solution, squeeze it then clean the stain on the surface gently.
- Wash cloth, squeeze it and wipe with detergent.
- Clean it softly with dry cloth.
- Allow to dry, do not blow dry.

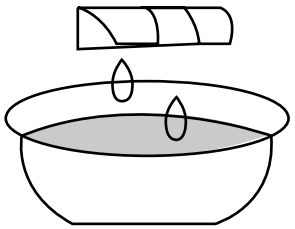

Fabric material

- Dip cloth into weak neutral detergent, squeeze it and clean the material surface. (Diluent, gas, alcohol are prohibited)
- Brush the dirty parts tm with weak neutral detergent. (avoid excessive brushing)
- Excessive cleaning may cause damage to cloth material.
- Wipe with water-dipped but squeezed cloth.
- Allow to dry.

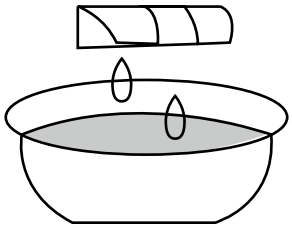

Plastic parts

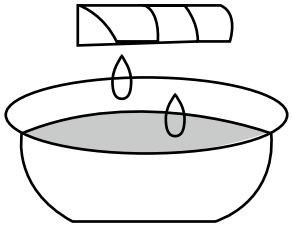

- Dip cloth into neutral detergent, squeeze it and clean.
- Wipe with water-dipped but squeezed cloth.
- Allow to dry.

Clean the controller

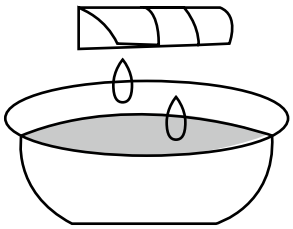

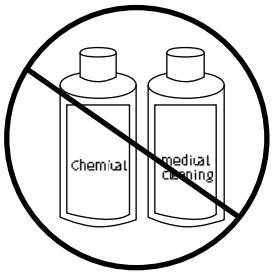

- Wipe with soft cloth after squeezing.
- Allow to dry.
- Propellant, diluent or alcohol are prohibited.

About cleaning

- Before cleaning, unplug the electricity, don' t touch the plug with wet hands.
- Make sure hands are dry when plugging to the socket.
- Fail to follow these instructions may cause user to experi-ence electric shock.

6 TROUBLESHOOTING GUIDE

KIND REMINDER

Please always check if the following phenomenons exist:

- If there is scorched smell
- If the power supply cord gets hot
- When touch the wire, the power is on, but sometimes off
- Other abnormal phenomenons
- If any of the above happens, please turn off power supply and contact the distributor or manufacturer for assistance.

TROUBLESHOOTING GUIDE

Problems/Issues	Possible Cause	Troubleshooting
Sounds like tapping or hum sounds	Sounds from air pump, motor or other mechanical parts.	Normal phenomenon.
Sound suddenly becomes much louder while work - ing	Check if it is due to long time working.	Turn off the power to have the massager rest for over half an hour.
	Inner parts worn out from long use.	Please contact our customer service team.
Abnormal sounds suddenly while working	Overworking.	Cut down usage.
		Contact our customer service team.

Problems/Issues	Possible Cause	Troubleshooting
Suddenly stops working	Bad power connection.	Unplug and reinsert power cord to the chair.
	Auto program timers is up.	Normal.Restart the masage chair and increase massage time.
Does not work after power up	Power switch is not turned on.	Turn power switch on.
	Bad connection between plug and socket.	Connection power cord again.
	Massage remote is not turned on.	Press power button on the remote.
	Have broken power wire plug.	Contact our customer service team.
	Bad fuse.	Replace fuse.
	Control unit for functioning properly.	Contact our customer service team.
Cannot recline the chair	Obstruction-be sure that the chair is allowed enough room to fully recline.	Stop chair operation, and move obstruction.
		Contact our customer service team.

Problems/Issues	Possible Cause	Troubleshooting
Neither the back - rest nor the legrest can move	Check if there are any obstacles; the chair has safety functions that will shut it down if there is an object blocking normal function.	Remove the obstacles; turn off the power to have the massager rest for over half an hour before next turn working.
		Contact our customer service team.
Cannot restore position after reclined	Excessive operation; Problem on electric motion pole or plug under bad connection.	Contact our customer service team.
Does not work after power up	It may have overload.	Turn off the power to have the massager rest for over half an hour before next round working.
	Other abnormal case.	Contact our customer service team.
For other issues, please turn off power supply and contact for assistance.		

7 PRODUCT SPECIFICATION

Description	Massage Chair
Model	OM100/OM101
Rated Input	110V~60Hz
Rated Power	150W
Rated Working Time	Approx. 15 minutes (automatic power-off)
Dimension(LxWxH)	When it is tilting (L*W*H) 69.3*29.3*36.8* inches
	When it isn't tilting (L*W*H) 63.2*29.3*45.1* inches
Dimensions of packing box(LxWxH)	51.6*30.3*45.7* inches
Net Weight	Approx. 161 lbs
Gross Weight	Approx. 202 lbs
Operating Conditions	Ambient temperature:Approx.0°C-35°C
	Reative humidity: Approx.20%-80%
Storage Conditions	Ambient temperature: Approx.-5°C-35°C
	Reative humidity:Approx.20%-80%
Maximum body weight of user	Approx. 265lb For a user heavier than 265lb, the product may have bigger noise and its fabric may be worn quicker.

8 FCC STATEMENT

FCC STATEMENT

Any changes or modifications not expressly approved by the party responsible for compliance could void the user's authority to operate the equipment. This device complies with part 15 of the FCC Rules. Operation is subject to the following two conditions:

- This device may not cause harmful interference.
- This device must accept any interference received, including interference that may ca use undesired operation.

EXPOSE STATEMENT

FCC Radiation Exposure Statement:

This equipment complies with FCC radiation exposure limits set forth for an uncontrolled environment.
This equipment should be installed and operated with minimum distance 20cm between the radiator & your body.

Note:

This equipment has been tested and found to comply with the limits for a Class B digital device pursuant to part 15 of the FCC Rules. These limits are designed to provide reasonable protection against harmful interference in a residential installation. This eauipment generates, uses and can radiate radio frequency energy and, if not installed and used in accordance with the instructions.may cause harmful interference to radio communications.

However, there is no guarantee that interference will not occur in a particular installation. If this equipment does cause harmful interference to radio or television reception, which can be determined by turning the equipment off and on, the user is encouraged to try to correct the interference by one or more of the following measures:

- Reorient or relocate the receiving antenna.
- Increase the separation between the equipment and receiver.
- Connect the equipment into an outlet on a circuit different from that to which the receiver is connected.
- Consult the dealer or an experienced radio/TV technician for help.

SAVE THESE INSTRUCTIONS

Website:www.flexispot.com

Tel:1-855-585-5618

Address: 6475 Las Positas Rd. Livermore, CA 94551