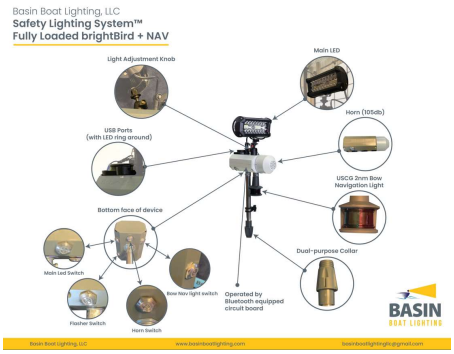

BASIN BOAT LIGHTING, LLC

Boat and Kayak Safety and Lighting Products.
The SmartBird™ Line of Products.

ABSTRACT

Basin Boat Lighting introduces “SmartBird™”. Changing the way we play.

Brian Signorelli

Former Paramedic, Registered Nurse, Clinical Fraud Investigator, avid Fisherman, Mad Scientist…

Basin Boat Lighting, LLC
Safety Lighting Systems

Table of Contents

Receiving you Safety Lighting System……2

Unpackaging the SmartBird……3

Inspection of the SmartBird……4

Installing the SmartBird on your Boat/Kayak……5

Bird-in-Hand
Boats……5

Kayaks……4

The Key Fob……6

Storage when not in use……7

BrightBirds……9

paddleBirds……9

The Safety Lighting System full product description……11

Colors……14

Hydrographics……14

Contacting Basin Boat Lighting……Below

Basin Boat Lighting, LLC
425 Blackwater River Drive
LA 70518

(337) 446-1221
basinboatlightingllc@gmail.com
brian@basinboatlighting.com

website: https://www.basinboatlighting.com

Basin Boat Lighting, LLC
Safety Lighting Systems

SPECIFICATIONS

Input: 12vdc

Outputs:

120W main LED (1.4A)
105db Horn (1.5A)
Bow Nav Light (0.8A)
USB Ports (0.5vdc)

Key Fob RF remote operation of main LED (A) and Horn (B) Frequency: 433MHz

BLE operation of the Horn, main LED, main LED Flasher mode, and Bow Nav Light (iOS and Android) 2.4GHz

PCB and peripherals have been tested for Intentional and Unintentional radiators. FCC Certification available upon request and noted in product data sheets. Minimum Standards met at the following:

Unintentional Radiators (FCC Part 15, Subpart B) ANSI C63.4-2014 - 200 000 MHz
Intentional Radiators (FCC Part 15, Subpart C) ANSI C63.10-2013 - 200 000 MHz
U-NII without DFS Intentional Radiators (FCC Part 15, Subpart E)

FCC FRN: 0033565128
Canada CCN: PENDING

This product meets the applicable Innovation, Science and Economic Development Canada technical specifications - PENDING

This product meets the FCC USA technical specifications.

USCG 2nm Bow Combination Red/Green Navigation Light

Design Patent USPTO – US D982,198S

Basin Boat Lighting, LLC
Safety Lighting Systems

FCC Caution

This device complies with part 15 of the FCC Rules. Operation is subject to the following two conditions: (1) This device may not cause harmful interference, and (2) this device must accept any interference received, including interference that may cause undesired operation.

Any Changes or modifications not expressly approved by the party responsible for compliance could void the user's authority to operate the equipment.

Note: This equipment has been tested and found to comply with the limits for a Class B digital device, pursuant to part 15 of the FCC Rules. These limits are designed to provide reasonable protection against harmful interference in a residential installation. This equipment generates uses and can radiate radio frequency energy and, if not installed and used in accordance with the instructions, may cause harmful interference to radio communications. However, there is no guarantee that interference will not occur in a particular installation. If this equipment does cause harmful interference to radio or television reception, which can be determined by turning the equipment off and on, the user is encouraged to try to correct the interference by one or more of the following measures:
-Reorient or relocate the receiving antenna.
-Increase the separation between the equipment and receiver.
-Connect the equipment into an outlet on a circuit different from that to which the receiver is connected.
-Consult the dealer or an experienced radio/TV technician for help.

***RF warning for Mobile device:**
This equipment complies with FCC radiation exposure limits set forth for an uncontrolled environment. This equipment should be installed and operated with a minimum distance of 20cm between the radiator & your body.

See page 15 for Block Diagram

Basin Boat Lighting, LLC
Safety Lighting Systems

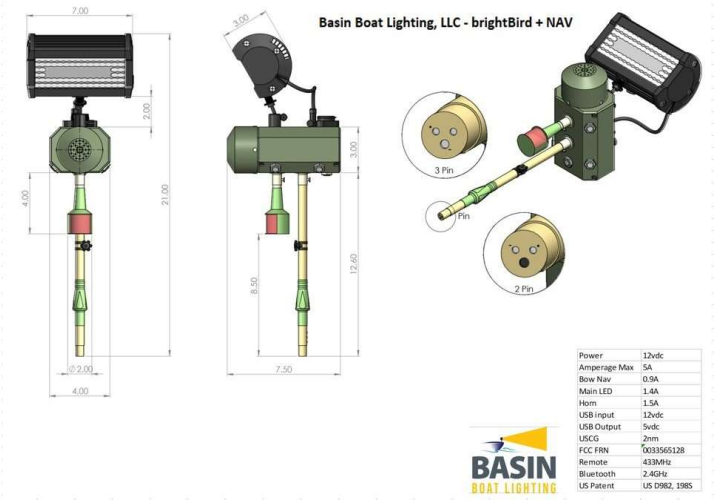

Power	12vdc
Amperage Max	5A
Bow Nav	0.9A
Main LED	1.4A
Horn	1.5A
USB input	12vdc
USB Output	5vdc
USCG	2nm
FCC FRN	0033565128
Remote	433MHz
Bluetooth	2.4GHz
US Patent	US D982, 198S

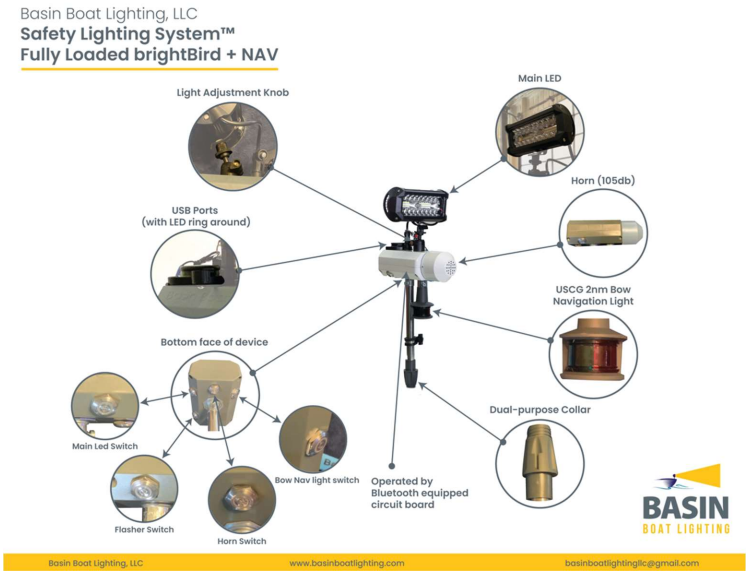

Basin Boat Lighting, LLC
Safety Lighting Systems

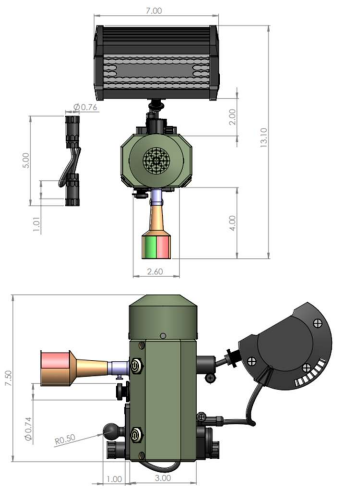

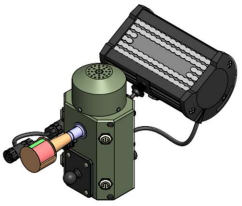

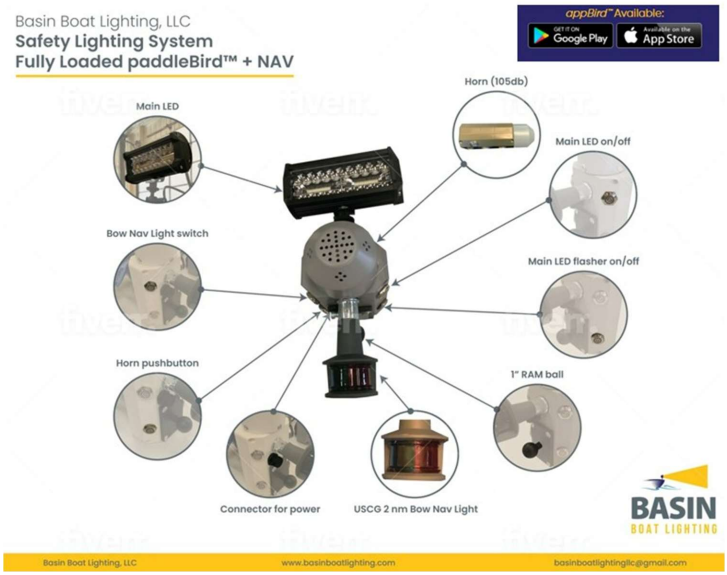

Basin Boat Lighting, LLC
Safety Lighting Systems

The owner of BBL has an extensive safety background – first on the flight-deck of the USS Kitty Hawk and the USS Carl Vinson, and then as an EMT, Paramedic, Firefighter, and Registered Nurse. SAFETY has always been at the forefront of every activity. Being a First Responder, then an ER Nurse built a vast, first-hand, knowledge of the resulting dangers of not making safety a priority, if only for a second. BBL is, and will remain, actively engaged in any idea that can make our friends and customers safer. BBL encourages all boaters to check your equipment on a regular basis, know what you have on board and what you don't have, ensure life jackets are USCG rated for the body size on board, have regular boat checkups by qualified professionals, drivers should attend Boating Safety classes, the driver of the boat must be a true DD for the day, know your person and weight limits, never pass a stranded boater, and, of course – make sure those you love carry one of the BBL family of birds, at all times

The design for our ***SmartBird™*** family of lights ensures it is easy to use, can be stowed when not in use, and will help keep you and your family safer on the water. Each of our lights can be removed from the boat and, with one of our optional adapters, connected to your power tool battery to become a handheld device. We call this one *Bird-in-Hand™*. All the functions on your device are ready and able to assist you!! From flashing light (meet *FlashyBird™*) to alert help, to noise to guide help (meet our 105db *LoudBird™*), and a way to charge the phone if the boat 12vdc power has failed (our friend *TechyBird™).* BBL is proud to offer this device. This is where we bring you the next level products that tie together with the previous and enhance the package we deliver!!

The **TechyBird™** is the addition of a 2 port USB outlet to charge phones and any other onboard USB capable items.

The **LoudBird™** is the addition of a 12vdc 95db horn. It is rather high-pitched, and the sound can be heard for long distances. A push button allows the user to sound SOS, bursts, continuous, or any pattern desired. This function can be used to meet the USCG requirement of a "sound" making device.

The **FlashyBird™** is the addition of a flasher to the Spot/Flood lighting circuit. With this option, power for the Spot/Flood is moved to flow through a flasher. The flash speed is 60+ times a minute, meeting yet another USCG requirement for an on-board visual signaling device. Let me say, if you ever, and we hope not, do need to use the FlashyBird™ to summon help – this will call 'em in from quite the distance. Those old flares can finally be disposed of. (Check your requirements – may still need that Orange/Black flag on board)

RemoteBird™ is one of our favorites as it allows the captain to control the main LED from the Captain's chair, or from anywhere within 50 feet or so, The Key Fob, and the "Laginappe" lanyard to keep it where it belongs, comes with your EarlyBird™ + NAV or BrightBird™ + NAV.

Speaking of Lagniappe, you will get two (2) Key Fobs programmed to your Bird with every purchase. That's right, we believe in back-up plans. Hint: The owner of Basin keeps his tightly wound around a rod holder by the captain's chair, so he won't leave home without it!! If you purchased a dry bag to store your Bird when it's not up and flying, be a great idea to keep the back-up in there. Also, I have had the same remote for almost two years. The battery has not run down yet!!

appBird™ Perhaps the one most will say is the "wow" factor. We all know that we reach for the phone for everything. It can be helpful in locating the boat if you are coming out of the woods from hunting. You can decide to use either the Horn or main LED to elicit a hint to where you parked it. You can turn the main LED on to ensure passengers are able to load safely and find their seats. You could use the Horn, main LED in ON or main LED in FlashyBird™. if you need assistance for any reason. Remember, that FlashyBird™, like launching a flare, when you activate it, people react differently. You are summoning assistance. Now, I have been around emergencies for quite some time. It is best to call early and turn 'em back then to call too late. Have a Plan, know it, and implement if needed.

All our products have built-in in-line fuse protection. Our 10W incandescent Bow Navigation Light draws 0.7A, the *LoudBird™ 1.5A*, the EarlyBird™ 60W LED 0.7A, the BrightBird™ 120W 1.4A – and coming soon out LED Bow Navigation Light at 0.5A. (all tested at 12.5vdc). Power miser all the way!

Our cutting edge *SmartBird™* products are power misers and controlled manually, through a Key Fob around your neck, and coming soon – from an app (naturally appBird™ right?) for your phone packed with information and fun tools for all boating users. This one is high tech!

The *SmartBird™* line of products currently in full scale production with parts from 4 different molds. This means it has passed Quality Control and been measured to the 100th of an inch, reconstructed by 3D printing, each item measured even more, had an exact plastic weight calculated, been through detailed itemization for each item's weight, cost, function, safety, compliance with USCG regulations/requirements for Certification by a USCG approved testing facility, and even tested to ensure the colors, angle of light (both where it must be can't be seen) in both horizontal and vertical planes. Old fashioned Quality Assurance. Our customers deserve every step. Quality.

Our Bow Lights have earned the "USCG 2nm" marking by our Quality Control measures. These do not stop at certification; they are part of Continuous Quality Assurance. The first, 1000th, and 100,000th Bow Light we sell must all meet our rigorous standards. BBL stands behind our products. Assembled in the USA by Veterans. We are just a phone call away!

Basin Boat Lighting, LLC
Safety Lighting Systems

As this time, we announce the release of the SmartBird™ line of products which include: EarlyBird™, EarlyBird™ full no NAV, EarlyBird™ + NAV, BrightBird™, BrightBird™ full no NAV, and the BrightBird + NAV. We have gone the extra mile to ensure we packed in as much value as possible for our customers. It has been one year in development with Quality and safety guiding our way. While we wanted to be a bit earlier to offer these products for you, our friends, and customers, it was and is important to us that we have every issue fixed, had a QA performed by our founder/owner (who is obsessed with Quality) on each item and (as we knew he would do) then with its functional and physical next step. No, it went on to the entire assembly was physically, functionally, and Safety checked, including the extra step of having it tested at a USCG approved Laboratory for compliance with the Bow Navigation light (which happened to be already approved but we turned that pup upside down 😊) in both the visibility sectors, for either light bulb currently in use (transitioning to LED), ABYC Regulations (electrical), USCG Regulations, the applicable CFR (Code of Federal Regulations), additional State requirements/Laws, and the old drench it with water for a while to make sure it is going to keep working. Now, none of the Bow Lights or LED's available will survive submersion immediately, but rain should not stop the operation. These Bow lights from BBL will survive if the owner rinses them with fresh water and allows it to drain and dry. For the EB or BB – send it to us quickly and we will assess it. I know I would remove water from mine simply by standing it up. Our Nest is not waterproof, but it is very water resistant. Remember, BBL stands behind our products for a FULL one year for PARTS and LABOR. We will pay for shipping to us and back if it appears that any item has failed, or workmanship is the issue. For members of our great boating community, service after the sale is also available. We will always do our best to turn your item around in the shortest time possible.

Basin Boat Lighting Safety Lighting Systems announces the addition of its smartphone emergency app, dubbed appBird™, to the currently available line-up of hi-tech SmartBird™ safety lighting products. Available for both iOS and android smartphones, the deployment of Basin's innovative appBird™ gives the recreational boater and kayaker a way to request emergency help and notify a designated emergency contact – right after dialing 911.

When activated, the SOS function on the app will allow Basin Boat Lighting to assist in summoning local emergency personnel to the user's last known GPS location and notify a designated emergency contact that an emergency has occurred. Working in connection with the app, the SmartBird™ safety lighting system on board the boat or kayak responds to an SOS activation by immediately activating its spotlight and horn. The light and horn will flash and beep to assist first responders in locating the vessel needing help. Additionally, the users name, call back number and GPS location are sent to Basin Boat Lighting, and we back up the emergency notification with GPS coordinates.

Basin Boat Lighting, LLC
Safety Lighting Systems

The USCG 2021 Report on Recreational Boating Statistics sheds light on the many potential dangers related to recreational boating and kayaking. Collisions, running aground or into underwater objects pose grave danger to boating enthusiasts each day. Created after a near catastrophic boating accident involving a submerged log, Basin Boat Lighting's original line of safety lighting systems incorporates USCG required safety features into one self-contained easy to use system.

Basin Boat Lighting is owned by local US Navy Veteran Brian Signorelli who, like many in Acadiana, spend much of their free time fishing and hunting in the Atchafalaya Basin. The full line of available SmartBird™ safety lighting systems can be found at https://www.basinboatlighting.com

Basin Boat Lighting, LLC

425 Blackwater River Drive
LA 70518
basinboatlightingllc@gmail.com
www.basinboatlighting.com
(337) 446-1221

Basin Boat Lighting™ *SmartBird™* product line

the *EarlyBird™*	the *EarlyBird™ full no NAV*	the *EarlyBird ™ + NAV*	the *BrightBird™*	the *BrightBird™ full no NAV*	the *BrightBird ™ + NAV*
the ***EarlyBird™*** is a pole mounted 60W combination spot/flood light capable of producing 6,000 lumens from a single light. -Amperage actual for the 60W is 0.7A at 12.5vdc -Fits in pole light base -Optional harness for dual application	the ***EarlyBird™ Full No NAV*** is a pole mounted 60W combination spot/flood light capable of producing 6,000 lumens from a single light. -Amperage actual for the 60W is 0.7A at 12.5vdc -Fits in pole light base	the ***EarlyBird™ + NAV*** is a pole mounted 60W combination spot/flood light capable of producing 6,000 lumens from a single light. - The US Coast Guard required Bow	the ***BrightBird™*** is a pole mounted 120W powerhouse combination spot/flood light capable of producing 12,000 lumens from a single light. -Amperage actual for the 120W is 1.4A at 12.5vdc - Fits in pole light base -Optional harness for dual application -Removable when not in use	the ***BrightBird™ Full no NAV*** is a pole mounted 120W powerhouse combination spot/flood light capable of producing 12,000 lumens from a single light. -Amperage actual for the 120W is 1.4A at 12.5vdc -Fits in pole light base -Optional harness for dual application	the ***BrightBird™ + NAV*** is a pole mounted 120W powerhouse combination spot/flood light capable of producing 12,000 lumens from a single light. The US Coast Guard required Bow Navigational red/green light is mounted

-Removable when not in use -Typical 2 pin marine light pole fits all bases (specific collar may be purchased to fit your need) - Some of our serious boating customers add 2 “nav light” bases/harnesses to their existing base and unleash 12,000 lumens onto their boating paths.	-Optional harness for dual application -Removable when not in use -Typical 2 pin marine fits all bases (all BBL products come with a dual-purpose collar)	Navigational red/green light is mounted under and just forward of the spot/flood for improved visibility. -Amperage actual for the 60W is 0.7A at 12.5vdc Fits in pole light base -Optional harness for dual application -Removable when not in use -Typical 2 pin marine fits all bases (all BBL products come with a dual-purpose collar)	-Typical 2 pin marine fits all bases (specific collar may be purchased to fit your need) - Some of our serious boating customers add 2 “nav light” bases/harnesses to their existing base and unleash 24,000 lumens onto their boating paths.	-Removable when not in use -Typical 2 pin marine fits all bases (all BBL products come with a dual-purpose collar)	under and just forward of the spot/flood for improved visibility. -Amperage actual for the 120W is 1.4A at 12.5vdc -Fits in pole light base -Optional harness for dual application -Removable when not in use -Typical 2 pin marine fits all bases (all BBL products come with a dual-purpose collar)

Basin Boat Lighting, LLC
Safety Lighting Systems

Included in the ***EarlyBird™ + Nav*** and the ***BrightBird™ + Nav*** (EB and BB without have the spot/flood and USB port only)

The ***TechyBird™*** is the addition of a 2 port USB outlet to charge phones and any other onboard USB capable items.

The ***LoudBird***™ is the addition of a 12vdc 95db horn. It is rather high-pitched, and the sound can be heard for long distances. A push button allows the user to sound SOS, bursts, continuous, or any pattern desired. This function can be used to meet the USCG requirement of a "sound" making device.

The ***FlashyBird™*** is the addition of a flasher to the Spot/Flood lighting circuit. With this option, power for the Spot/Flood is moved to flow through a flasher. The flash speed is 60+ times a minute, meeting yet another USCG requirement for an on-board visual signaling device. Let me say, if you ever, and we hope not, do need to use the ***FlashyBird™*** to summon help – this will call 'em in from quite the distance. Those old flares can finally be disposed of. (Check your requirements – may still need that Orange/Black flag on board)

RemoteBird™ is one of our favorites as it allows the captain to control the main LED from the Captain's chair, or from anywhere within 50 feet or so, The Key Fob, and the "Laginappe" lanyard to keep it where it belongs, comes with your ***EarlyBird™ + NAV*** or ***BrightBird™ + NAV***. Speaking of Lagniappe, you will get two (2) Key Fobs programmed to your Bird with every purchase. That's right, we believe in back-up plans. Hint: The owner of Basin keeps his tightly wound around a rod holder by the captain's chair, so he won't leave home without it!! If you purchased a dry bag to store your Bird when it's not up and flying, be a great idea to keep the back-up in there. Also, I have had the same remote for almost two years. The battery has not run down yet!!

appBird™ Perhaps the one most will say is the "wow" factor. We all know that we reach for the phone for everything. It can be helpful in locating the boat if you are coming out of the woods from hunting. You can decide to use either the Horn or main LED to elicit a hint to where you parked it. You can turn the main LED on to ensure passengers are able to load safely and find their seats. You could use the Horn, main LED in ON or main LED in ***FlashyBird™***. if you need assistance for any reason. Remember, that ***FlashyBird™***, like launching a flare, when you activate it, people react differently. You are summoning assistance. Now, I have been around emergencies for quite some time. It is best to call early and turn 'em back then to call too late. Have a Plan, know it, and implement if needed.

All our products have built-in in-line fuse protection. Our 10W incandescent Bow Navigation Light draws 0.7A, the ***LoudBird™*** 1.5A, the EarlyBird™ 60W LED 0.7A, the ***BrightBird™*** 120W 1.4A – and coming soon out LED Bow Navigation Light at 0.5A. (all tested at 12.5vdc). Power miser all the way!

Basin Boat Lighting, LLC
Safety Lighting Systems

Our cutting edge ***SmartBird™*** products are power misers and controlled manually, through a Key Fob around your neck, and coming soon – from an app (naturally ***appBird™*** right?) for your phone packed with information and fun tools for all boating users. This one is high tech!

The ***SmartBird™*** line of products currently in full scale production with parts from 4 different molds. This means it has passed Quality Control and been measured to the 100th of an inch, reconstructed by 3D printing, each item measured even more, had an exact plastic weight calculated, been through detailed itemization for each item's weight, cost, function, safety, compliance with USCG regulations/requirements for Certification by a USCG approved testing facility, and even tested to ensure the colors, angle of light (both where it must be can't be seen) in both horizontal and vertical planes. Old fashioned Quality Assurance. Our customers deserve every step. Quality.

Our Bow Lights have earned the "USCG 2nm" marking by our Quality Control measures. These do not stop at certification; they are part of Continuous Quality Assurance. The first, 1000th, and 100,000th Bow Light we sell must all meet our rigorous standards. BBL stands behind our products. Assembled in the USA by Veterans. We are just a phone call away!

As this time, we announce the release of the ***SmartBird™*** line of products which include: ***EarlyBird™, EarlyBird™ full no NAV, EarlyBird™ + NAV, BrightBird™, BrightBird™ full no NAV, and the BrightBird + NAV***. We have gone the extra mile to ensure we packed in as much value as possible for our customers. It has been one year in development with Quality and safety guiding our way. While we wanted to be a bit earlier to offer these products for you, our friends, and customers, it was and is important to us that we have every issue fixed, had a QA performed by our founder/owner (who is obsessed with Quality) on each item and (as we knew he would do) then with its functional and physical next step. No, it went on to the entire assembly was physically, functionally, and Safety checked, including the extra step of having it tested at a USCG approved Laboratory for compliance with the Bow Navigation light (which happened to be already approved but we turned that pup upside down 😊) in both the visibility sectors, for either light bulb currently in use (transitioning to LED), ABYC Regulations (electrical), USCG Regulations, the applicable CFR (Code of Federal Regulations), additional State requirements/Laws, and the old drench it with water for a while to make sure it is going to keep working. Now, none of the Bow Lights or LED's available will survive submersion immediately, but rain should not stop the operation. These Bow lights from BBL will survive if the owner rinses them with fresh water and allows it to drain and dry. For the EB or BB – send it to us quickly and we will assess it. I know I would remove water from mine simply by standing it up. Our *Nest* is not waterproof, but it is very water resistant. Remember, BBL stands behind our products for a FULL one year for PARTS and LABOR. We will pay for shipping to us and back if it appears that any item has failed, or workmanship is the issue. For members of our great boating community, service after the sale is also available. We will always do our best to turn your item around in the shortest time possible…. ensuring you can "GET IT BRIGHT, BAW!" soon and "make your day on the water last a little longer" AND "be safer" with our product on-board.

Basin Boat Lighting Safety Lighting Systems announces the addition of it's smartphone emergency app, dubbed **appBird™**, to the currently available line-up of hi-tech SmartBird™ safety lighting products. Available for both iOS and android smartphones, the deployment of Basin's innovative appBird™ gives

the recreational boater and kayaker a way to request emergency help and notify a designated emergency contact – right after dialing 911.

When activated, the SOS function on the app will allow Basin Boat Lighting to assist in summoning local emergency personnel to the user's last known GPS location and notify a designated emergency contact that an emergency has occurred. Working in connection with the app, the SmartBird™ safety lighting system on board the boat or kayak responds to an SOS activation by immediately activating its spotlight and horn. The light and horn will flash and beep to assist first responders in locating the vessel needing help. Additionally, the users name, call back number and GPS location are sent to Basin Boat Lighting, and we back up the emergency notification with GPS coordinates.

The USCG 2021 Report on Recreational Boating Statistics sheds light on the many potential dangers related to recreational boating and kayaking. Collisions, running aground or into underwater objects pose grave danger to boating enthusiasts each day. Created after a near catastrophic boating accident involving a submerged log, Basin Boat Lighting's original line of safety lighting systems incorporates USCG required safety features into one self-contained easy to use system.

Basin Boat Lighting is owned by local US Navy Veteran Brian Signorelli who, like many in Acadiana, spend much of their free time fishing and hunting in the Atchafalaya Basin. The full line of available SmartBird™ safety lighting systems can be found at www.basinboatlighting.com

This product meets the applicable Innovation, Science and Economic Development Canada technical specifications.

This product meets the FCC USA technical specifications.

USCG 2nm Bow Combination Red/Green Navigation Light

Design Patent USPTO – US D982,198S

*after 5 days we do not accept the devices back for refund. We offer refund/replacement within 5 days, but we must receive the device back and verify it is in new condition. If the device arrives damaged you must immediately take pictures of all 6 sides of the box, and 4 to 6 pictures of the device focusing on damage and an overall picture. You must file a claim with the carrier prior to requesting a refund.

Returns/Refunds – Basin Boat Lighting warranties the SmartBird for one-year from the date of purchase. The warranty covers parts and workmanship. We do not cover operator errors such as plugging it to wrong power, wrong pin selection, and general negligence. This is your device. The buyer is responsible for shipping to and from Basin Boat Lighting.