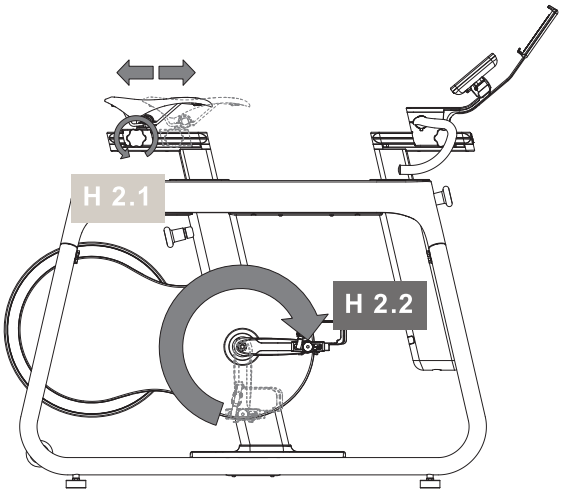
H 2.1
H 2.2

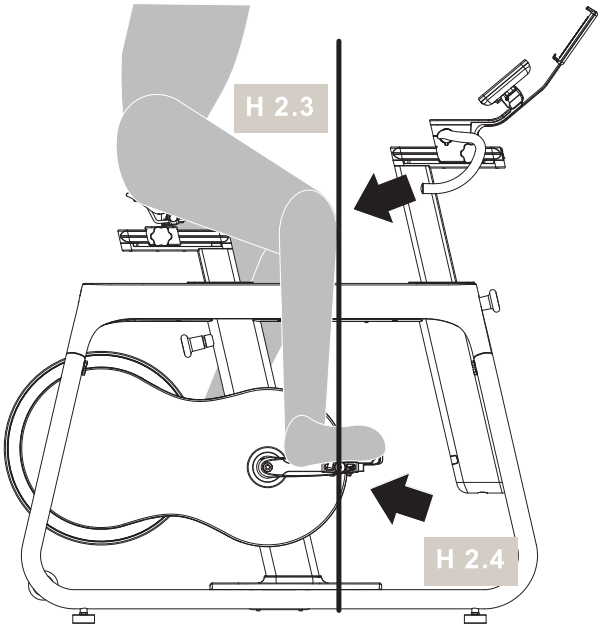
H 2.3
H 2.4

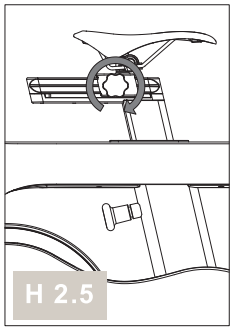
H 2.5

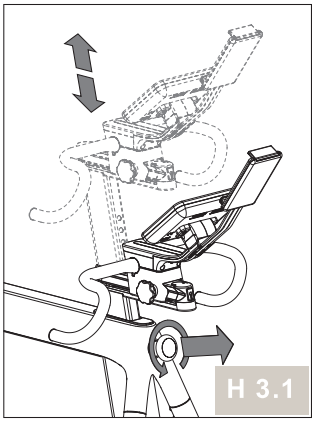
H 3.1

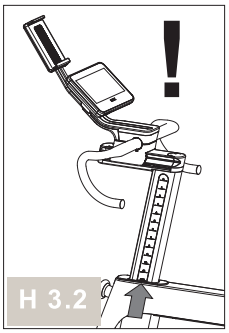
!
H 3.2

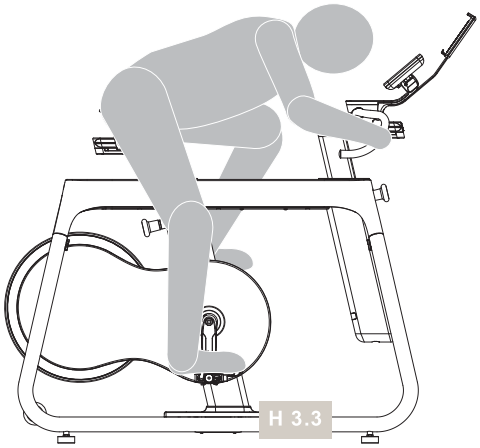
H 3.3

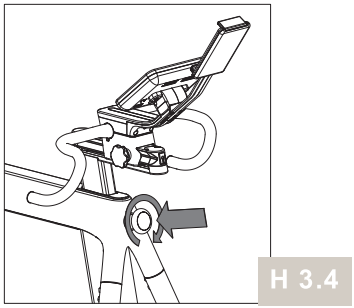
H 3.4

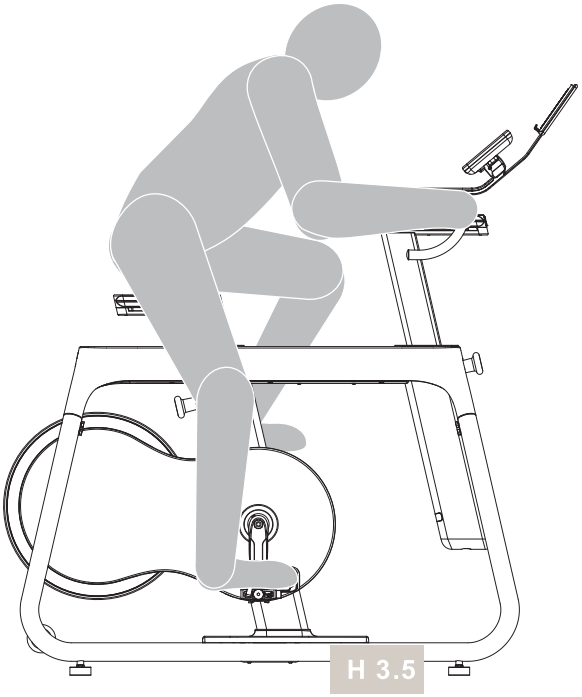
H 3.5

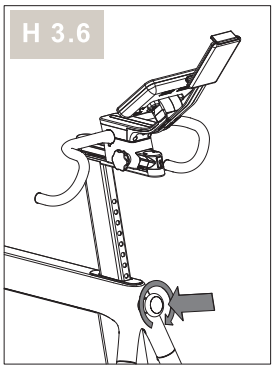
H 3.6

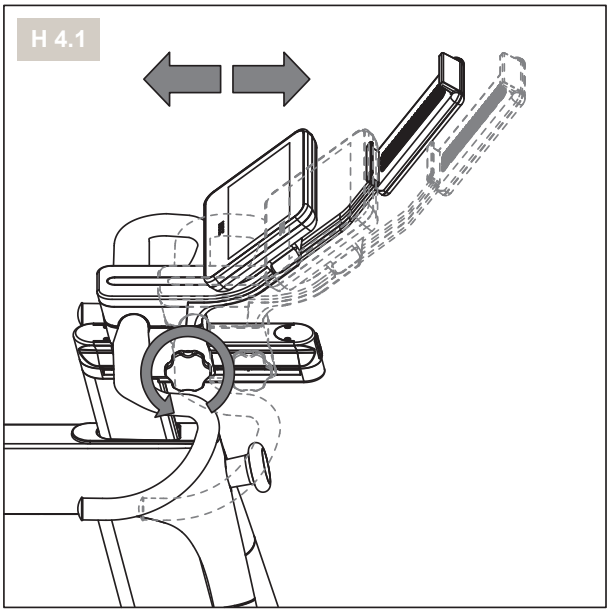

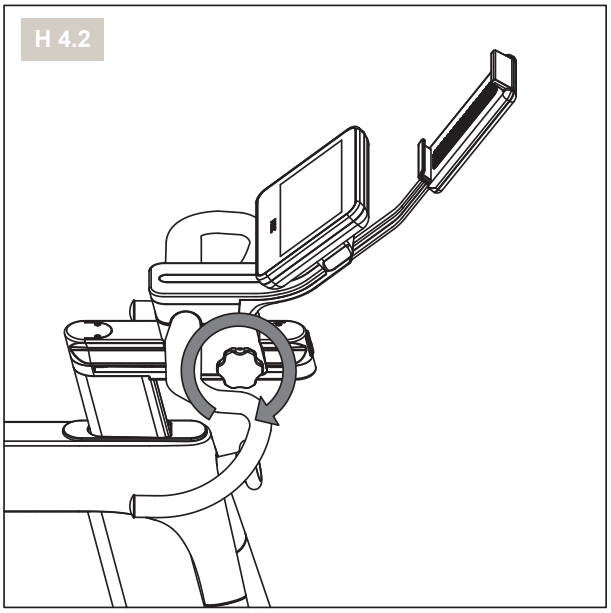

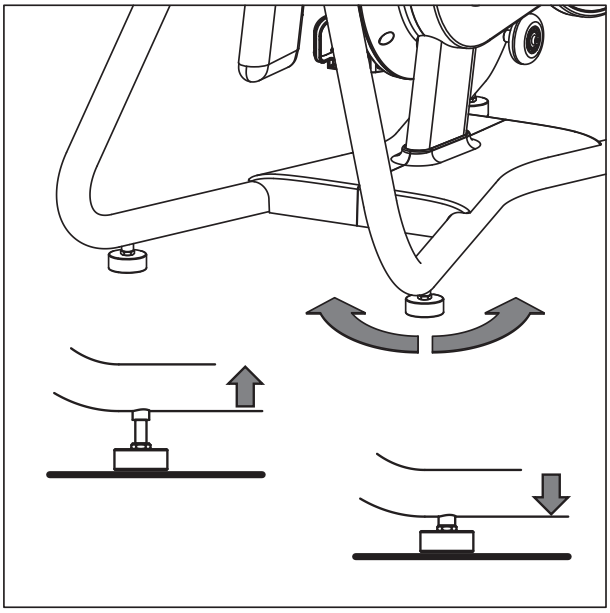

H 6

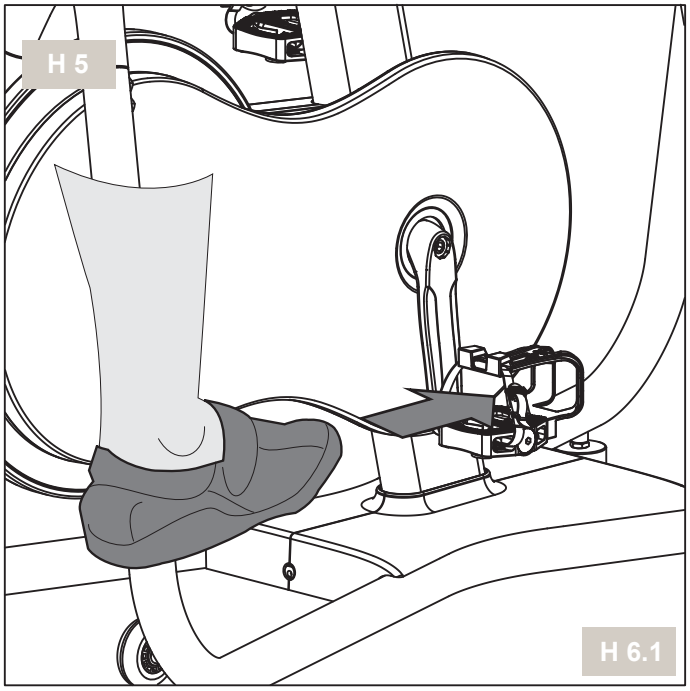

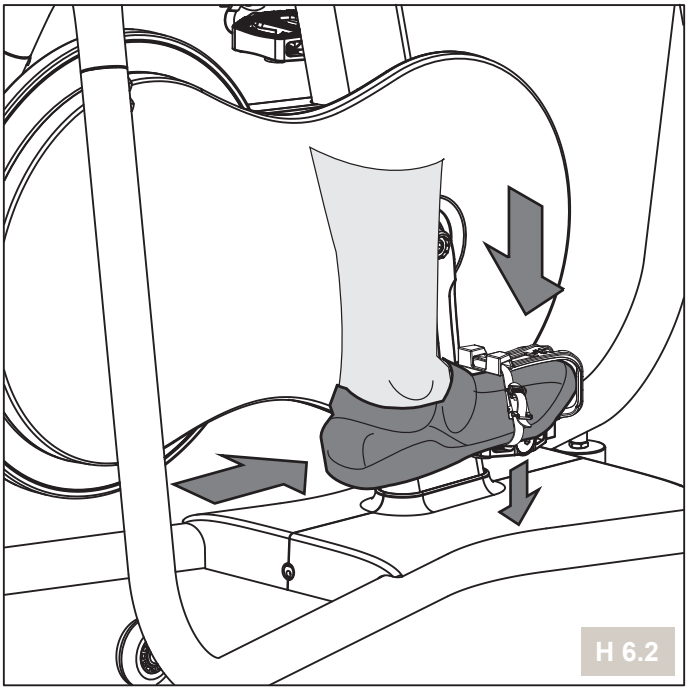

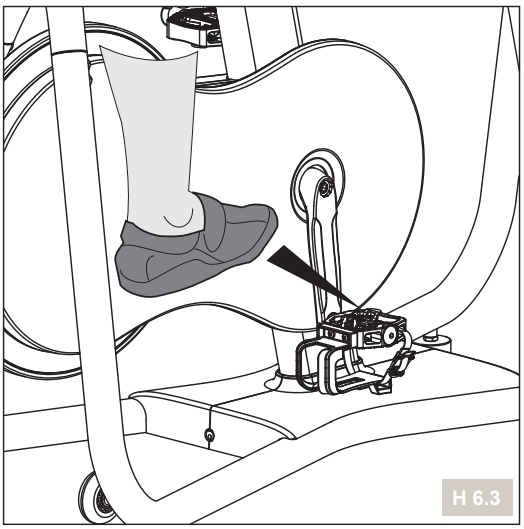

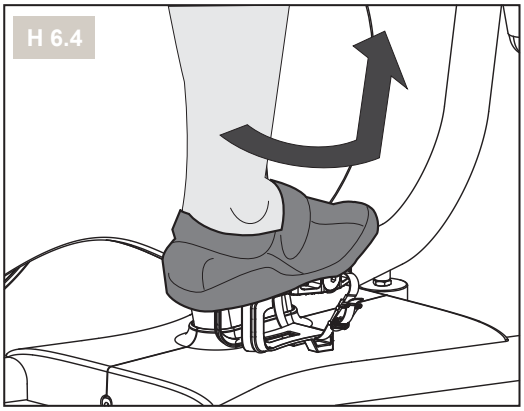

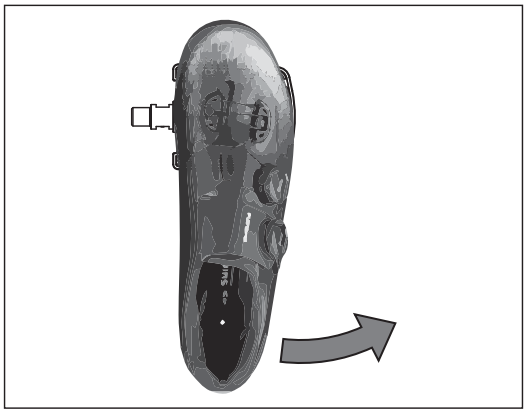

H 7

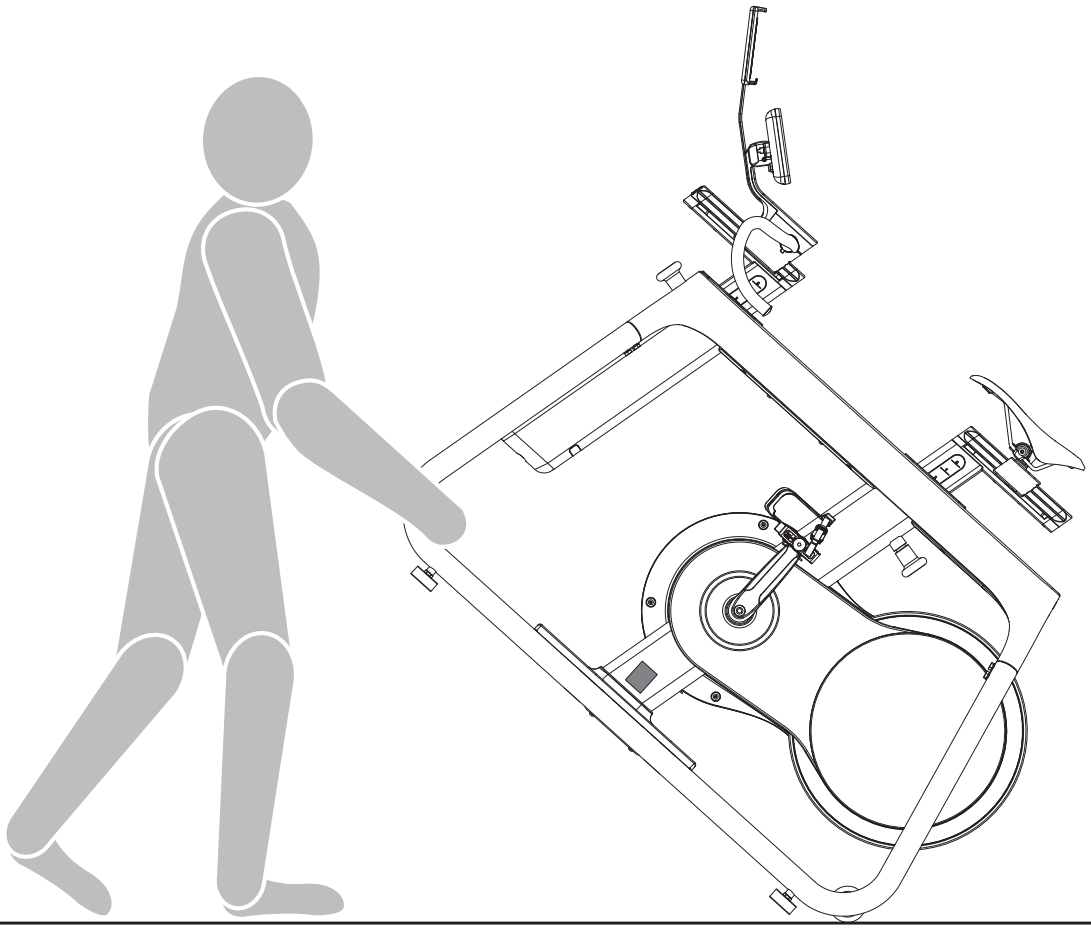

Sports medicine and physical education also use the exercise bike to check how well the cardiovascular and respiratory systems are working.
You can verify whether your training sessions are having the desired effect after a few weeks in the following way:
1. You are able to reach a certain level of endurance with less strain on your cardiovascular system than before.
2. You are able to maintain a certain level of endurance with the same cardiovascular output over a longer period of time.
3. You recover quicker than before when your cardiovascular system is performing at a certain level.

The training sessions are designed to provide intensive bike training across different terrain. Different terrain and routes are simulated by using various different training features.

TRAINING FEATURES

Various training features are available for altering the intensity of your training session:

T1 3 hand and seat positions
T2 2 types of terrain (flat country and hill country) = change in resistance + / -
T3 2 step frequencies rpm (rpm = revolutions per minute > pedal revolutions)
T4 5 pulse zones (when training using pulse measurement)

T 1 HAND AND SEAT POSITIONS (WITH IMAGE)

T1.1 Sitting/hands in pos. 1 or 2 (when sprinting)
T1.2 Standing upright/hands in in pos. 3
T1.3 Sitting and tilted forward/hands in pos. 1 or 3

T2 TYPES OF TERRAIN = RESISTANCE CAN BE CHANGED INFINITELY

T2.1 Flat country
T2.2 Hill country (uphill)

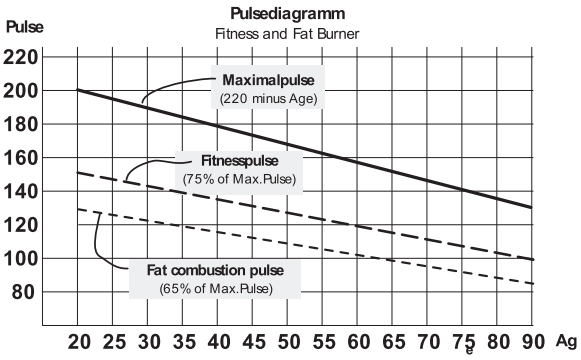

T3 PEDALLING FREQUENCY = TEMPO OPTIONS (PEDAL REVOLUTIONS)

T3.1 Flat country > medium to maximum speed > 80-110 rpm
T3.2 Hill country > normal to medium > 60-80 rpm
You can adjust your pedalling to background music that has different rhythms.

T4 PULSE ZONES

Heart rate monitor:
The bike has a heart rate monitor, A chest belt for heart rate measurement is not included.
If you use a heart rate monitor during your training session, please note the following advice:
Maximum heart rate: The maximum heart rate is dependant on age.
Maximum heart rate per minute equals 220 beats minus your age. Example: 50 years old > 220 – 50 = 170 beats/min.
The exertion levels are shown as a percentage (%) of this calculated value. e.g. 50 years old: 100% = 170 beats/min.; 70% = 119 beats/ min. etc.

T4.1 Recovery > 50 - 65%
T4.2 Endurance > 65 - 80%
T4.3 Power > 75 - 85%
T4.4 Interval > 65 - 92%
T4.5 Racing mode > 80 - 92%

You should only be in a racing mode of > 92% for a short period of time!

Being able to combine different training features allows you to customise your own training session.

Length and frequency of each training session each week:
The ideal exertion range is achieved if 65 - 75% of the cardiovascular output level is reached over a longer period of time. Rule of thumb: Beginners should start with short training sessions of between 20 and 30 minutes.

During the first four weeks, a beginner's training programme might look like the following: 5 minutes of stretching both before and after the training session to either warm up or cool down. Between two training sessions, there should be one day where you do not train if you intend at a later date to increase training sessions of 3 times a week to between
30 and 60 minutes each. Otherwise, there is no reason not to train every day.

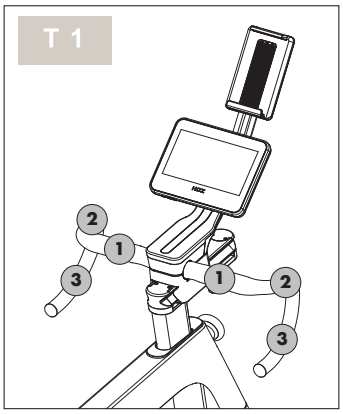
T 1
2
1
3
1
2
3

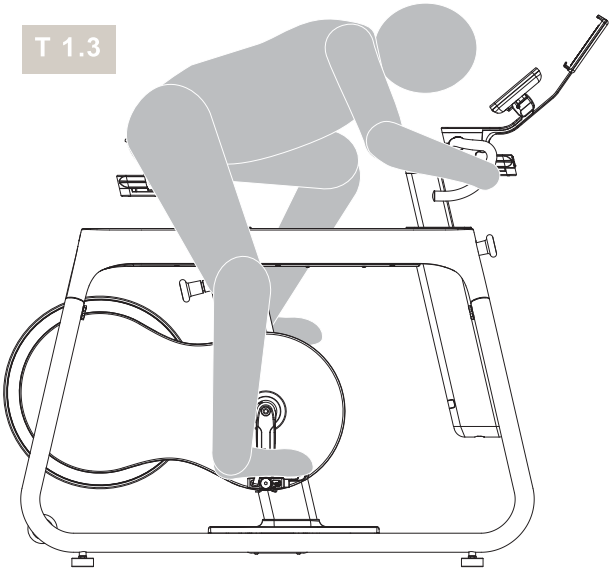
T 1.3

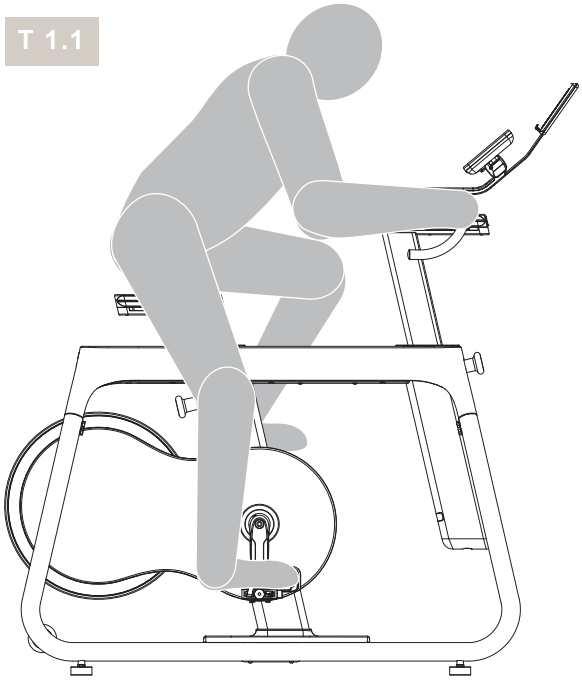
T 1.1

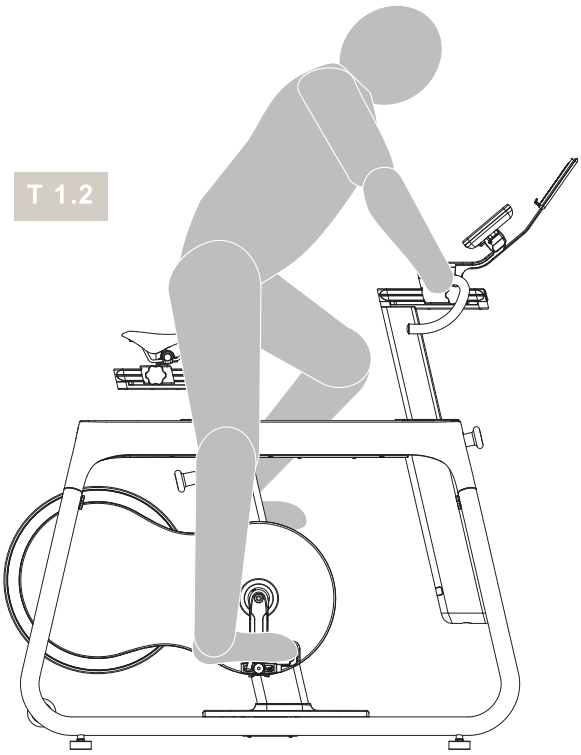
T 1.2

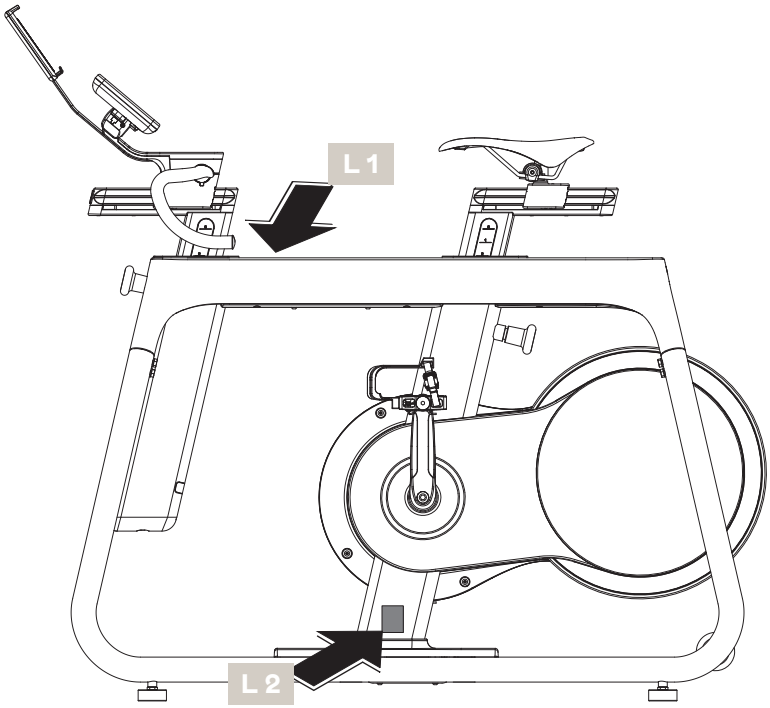

Example Type label - Serial number

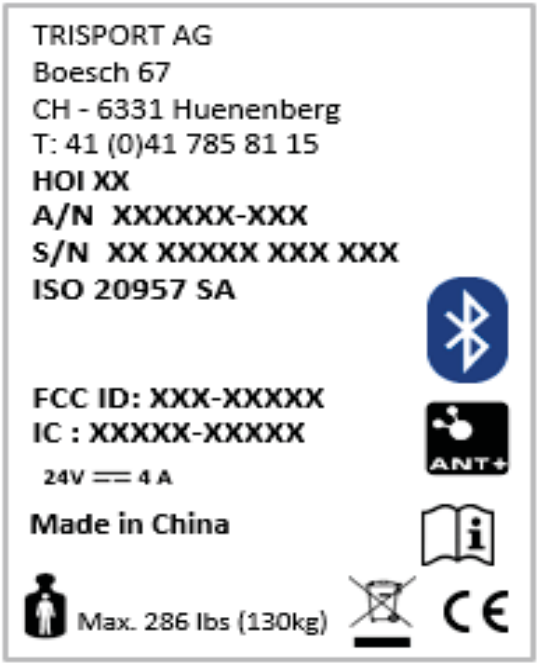

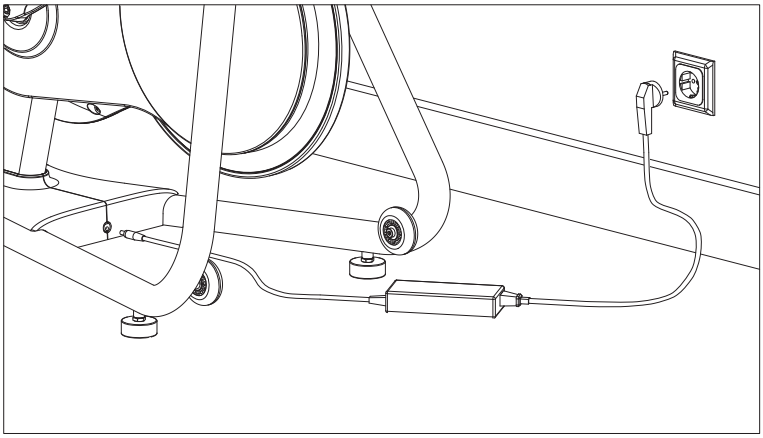

L 2 TYPE LABEL - SERIAL NUMBER

See example below.

When ordering spare parts, always state the full article number, spare-part number, the quantity required and the S/N of the product.

FCC RF Statement:

NOTE: This equipment has been tested and found to comply with the limits for a Class B digital device, pursuant to part 15 of the FCC Rules. These limits are
designed to provide reasonable protection against harmful interference in a residential installation. This equipment generates, uses and can radiate radio frequency energy and, if not installed and used in accordance with the instructions, may cause harmful interference to radio communications. However, there is no guarantee that interference will not occur in a particular installation. If this equipment does cause harmful interference to radio or television reception, which can be determined by turning the equipment off and on, the user is encouraged to try to correct the interference by one or more of the following measures:

- Reorient or relocate the receiving antenna.
- Increase the separation between the equipment and receiver.
-Connect the equipment into an outlet on a circuit different from that to which the receiver is connected.
-Consult the dealer or an experienced radio/ TV technician for help.

Changes or modifications not expressly approved by the party responsible for compliance could void the user's authority to operate the equipment.

FCC RF Exposure Warning Statements:
This equipment complies with FCC radiation exposure limits set forth for an uncontrolled environment. This equipment shall be installed and operated with minimum distance 20cm between the radiator & body.

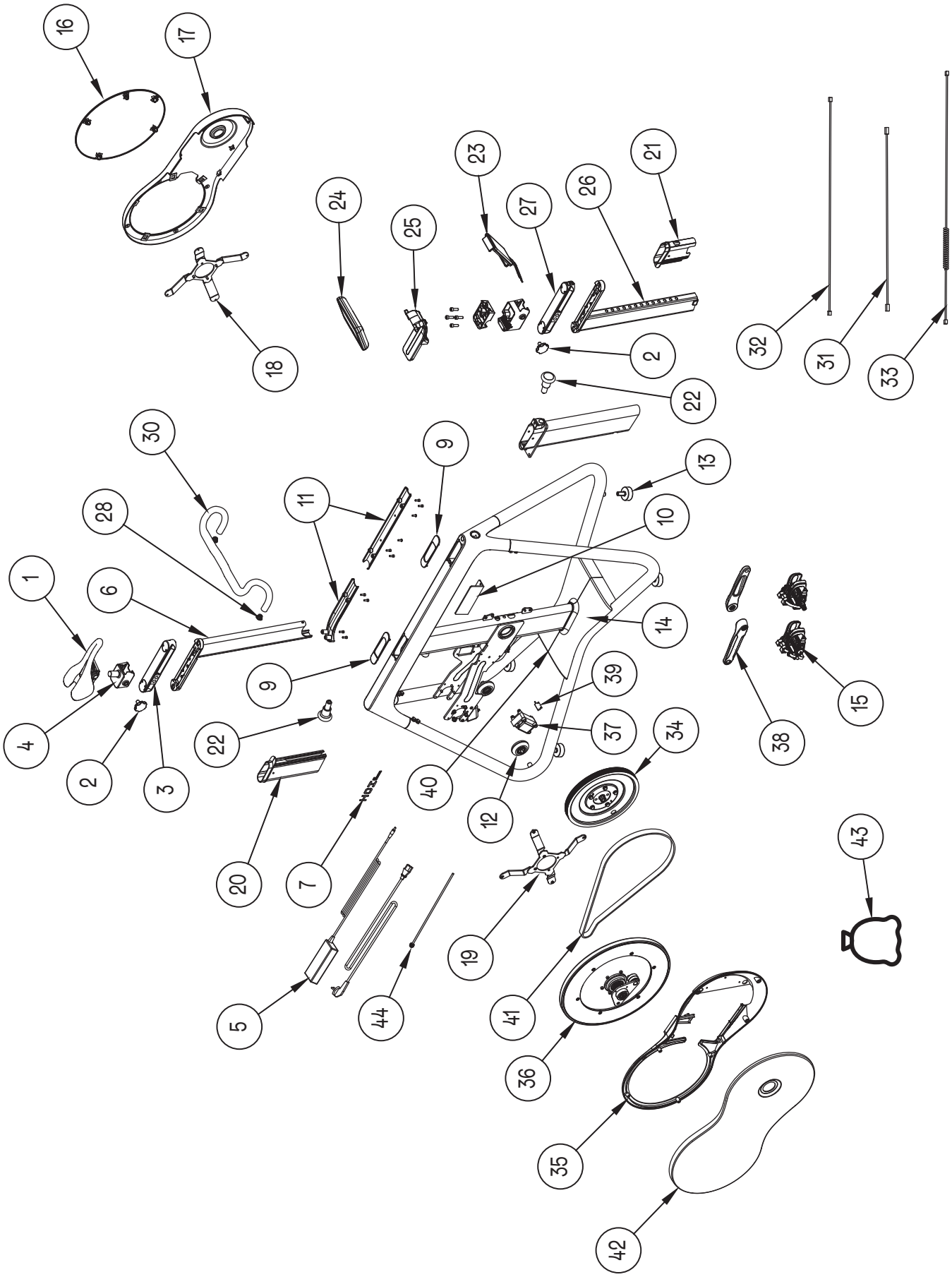
16
17
18
24
25
23
27
26
21
2
22
32
31
33
30
28
1
6
4
2
3
11
9
9
22
20
7
5
44
13
10
14
39
37
40
12
34
38
15
19
41
36
35
42
43

NOTE: The components marked with an "X" are available from stock as spare parts.

	Item Number	Quantity	Part Number
X	1	x1	70001340
X	2	x2	70001341
X	2	x2	70001342
X	2	x2	70001343
	3	x1	70001291
X	4	x1	70001332
X	5	x1	70001344
	6	x1	70001296
	7	x1	70001309
	9	x2	70001345
	10	x1	70001346
	11	x1	70001308
	12	x2	70001347
	13	x4	70001325
	14	x1	70001348
X	15	x1	70001349
	16	x1	70001350
	17	x1	70001351
	18	x1	70001352
	19	x1	70001353
	20	x1	70001328
X	21	x1	70001327
X	22	x2	70001354
X	22	x2	70001355
X	22	x2	70001356
X	23	x1	70001357
X	24	x1	70001358
X	25	x1	70001359
	26	x1	70001360
	27	x1	70001361
	28	x2	70001362
	30	x1	70001363
	31	x1	70001364
	32	x1	70001365
	33	x1	70001366
	34	x1	70001367
	35	x1	70001368
	36	x1	70001369
X	37	x1	70001370
X	38	x1	70001371
X	39	x1	70001372
	40	x1	70001373
X	41	x1	70001374
X	42	x1	70001375
X	43	x1	70001376
	44	x1	70001377

TRISPORT AG
BOESCH 67
CH-6331 HUENENBERG
SWITZERLAND
T: +41 (0)41 785 81 15
www.hoi-fitness.com

@ HOI
@ HOI

docu BK 1055-XXX/US/01.23/a