HONDA

motocompacto

Owner's Manual & Quick Start Guide

FCC Compliance Statement
This device complies with Part 15 of the FCC Rules. Operation is subject to the following two conditions: (1) This device may not cause harmful interference, and (2) this device must accept any interference received, including interference that may cause undesired operation.

NOTE: This equipment has been tested and found to comply with the limits for a Class B digital device, pursuant to Part 15 of the FCC Rules.
These limits are designed to provide reasonable protection against harmful interference in a residential installation.
This equipment generates, uses and can radiate radio frequency energy and, if not installed and used in accordance with the instructions, may cause harmful interference to radio communications.
However, there is no guarantee that interference will not occur in a particular installation.
If this equipment does cause harmful interference to radio or television reception, which can be determined by turning the equipment off and on, the user is encouraged to try to correct the interference by one or more of the following measures:

– Reorient or relocate the receiving antenna.
– Increase the separation between the equipment and receiver.
– Connect the equipment into an outlet on a circuit different from that to which the receiver is connected.
– Consult an authorized Honda servicing dealer.

Changes or modifications not expressly approved by the party responsible for compliance could void the user's authority to operate the equipment.
Supplied items must be used with this equipment, and must not be used for other purposes.

© 2023 American Honda Motor Co., Inc. - All Rights Reserved.

Introduction

Congratulations on your purchase of a new Honda Motocompacto. Your selection of a Honda makes you part of a worldwide family of satisfied customers who appreciate Honda's reputation for building quality into every product.

To ensure your safety and riding pleasure:
- Read this owner's manual carefully.
- Follow all recommendations and procedures contained in this manual.
- Pay close attention to safety messages contained in this manual and on the scooter.

To protect your investment, we urge you to take responsibility for keeping your scooter well-serviced and maintained.

Read the warranty information thoroughly so that you understand the warranty coverage and are aware of your rights and responsibilities.

Happy riding!

© 2023 American Honda Motor Co., Inc. - All Rights Reserved.

Privacy Notice

This product may share location and usage information when used in conjunction with its mobile app. To learn more about how we collect and use Personal Information, please read our Privacy Notice at www.honda.com.

© 2023 American Honda Motor Co., Inc. - All Rights Reserved.

A Few Words About Safety

Your safety, and the safety of others, is very important. Operating your Honda product safely is an important responsibility.

To help you make informed decisions about safety, we have provided operating procedures and other information on labels in this manual. This information alerts you to potential hazards that could hurt you or others.

Of course, it is not practical or possible to warn you about all the hazards associated with operating or maintaining your scooter. You must use your own good judgment.

For your safety and safety of others, pay special attention to all warning symbols. Failure to follow the warnings contained in this manual can result in damage to your scooter, serious injury, or death.

Warning Symbols

⚠ DANGER	You **WILL** be **KILLED** or **SERIOUSLY HURT** if you don't follow instructions.
⚠ WARNING	You **CAN** be **KILLED** or **SERIOUSLY HURT** if you don't follow instructions.
⚠ CAUTION	You **CAN** be **HURT** if you don't follow instructions.
NOTICE	You **CAN** damage your scooter, other property or the environment.

© 2023 American Honda Motor Co., Inc. - All Rights Reserved.

Contents

1. Registration	P. 6
2. Rider & Scooter Safety	P. 9
3. Quick Start Guide	P. 16
3.1 Parts Location	P. 17
3.2 Battery/Charging	P. 18
3.3 Unfolding	P. 19
3.4 Getting Started	P. 23
3.5 Starting and Stopping	P. 23
3.6 Display and Power Modes	P. 24
3.7 Folding	P. 26
4. Care	P. 31
5. Maintenance	P. 33
5.1 Brake Adjust	P. 34
5.2 Brake Cable Lubrication	P. 35
5.3 Foot Peg Lubrication	P. 35
6. Troubleshooting	P. 36
7. Specifications	P. 40
8. Warranty	P. 42

© 2023 American Honda Motor Co., Inc. - All Rights Reserved.

1 Registration

HONDA PRODUCT REGISTRATION CARD

Congratulations on the purchase of your new Motocompacto! Thank you for registering your Honda product.

To facilitate verification of warranty eligibility and future Motocompacto communications, please send this completed product registration card* and proof of purchase (copy of sales receipt or invoice) to the address below:

American Honda Motor Co., Inc.
Attn: Automobile Warranty
1919 Torrance Blvd.
Torrance, CA 90501-2746

Please fill out the following fields:

PRODUCT IDENTIFICATION NUMBER (PIN) *For help locating your PIN, please refer to the Owner's Manual.*

FIRST NAME _____ **EMAIL ADDRESS** _____

LAST NAME _____ **PHONE NUMBER** _____

ADDRESS _____
STREET **APT NO.**

_____
CITY **STATE** **ZIP CODE**

DATE PURCHASED	PURCHASED VIA		LOCATION PURCHASED
_____ (include copy of sales receipt or invoice for proof of purchase)	Dealer	☐	_____
	DreamShop	☐	_____

* This card is for product registration only. Failure to complete and return card does not diminish the product's warranty. Please refer to your Owner's Manual for warranty eligibility, coverage details, and exclusions.

To learn more about how we collect and use Personal Information, please read our Privacy Notice at www.honda.com. It is recommended that you make a copy of this form for yourself before mailing to American Honda Motor Co., Inc., 1919 Torrance Blvd., Torrance, CA 90501-2746

SP-20389

This page intentionally left blank.

Rider & Scooter Safety

2

Safety Guidelines

Follow these guidelines to enhance your safety:

- Perform charging schedule per instruction and pre-ride inspections (latching/folding/tire tread).

Always Wear a Helmet

It's a proven fact: helmets and protective apparel significantly reduce the number and severity of head and other injuries. So always wear an approved helmet and protective apparel.

Before Riding

Make sure that you are physically fit, mentally focused, and free of alcohol and drugs. Wear an approved helmet and protective apparel.

Take Time to Learn & Practice

Even if you have ridden other scooters, practice riding in a safe area to become familiar with how this scooter works and handles, and to become accustomed to the scooter's size and weight.

Ride Defensively

Always pay attention to other vehicles around you, and do not assume that other drivers see you. Be prepared to stop quickly or perform an evasive maneuver. Ride defensively in response to weather and road conditions.

Make Yourself Easy to See

Make yourself more visible, especially at night, by wearing bright reflective clothing, positioning yourself to make yourself visible and signal before turning.

Ride within Your Limits

Never ride beyond your personal abilities or faster than conditions warrant. Fatigue and inattention can impair your ability to use good judgment and ride safely.

Don't Drink or Use Drugs and Ride

Alcohol or drugs and riding don't mix. Even one alcoholic drink can reduce your ability to respond to changing conditions, and your reaction time gets worse with every additional drink. The same is true for drug use. Don't drink or use drugs and ride, and don't let your friends do it either.

© 2023 American Honda Motor Co., Inc. - All Rights Reserved.

Safety Warnings

- Make sure that the contents of “Safety Warnings” are absolutely clear to persons who may come in contact with Motocompacto. If you do not, an accident may occur.

Before Riding

- Do not ride while charging, unplug before riding.
- Do not disable the charger ground or modify the charger in any way.
- Do not stick foreign objects into the charging port.
- Do not charge Motocompacto if the charger unit is damaged.
- Do not charge in wet or extreme temperature environments or near flammable or corrosive substances.
- Only charge with Honda provided charger using the provided charging port. Unplug the charger and disconnect from Motocompacto when not in use.
- When the battery is fully charged, stop charging and unplug the charger.
- Check that all guards originally supplied by the manufacturer are in proper place and in serviceable condition.
- Check that the braking and brake light system are functioning properly.
- Check that all safety labels are in place and understood by the operator.
- Check that the tires are in good condition, and have sufficient tread remaining.
- Check for broken parts and ensure all mechanisms are securely latched.

⚠ CAUTION

This scooter should not be operated by persons with the following conditions:

- **Heart condition**
- **Pregnancy**
- **Head, back, or neck ailments or prior surgeries to these areas of the body.**
- **Persons with any mental or physical conditions that may make them susceptible to injury or impair their physical dexterity or mental capabilities to recognize, understand, and perform all of the safety instructions and to be able to assume the hazards inherent in unit use.**

© 2023 American Honda Motor Co., Inc. - All Rights Reserved.

⚠ WARNING

Touching the charging socket or improperly holding the plug may result in electrocution, causing serious injury or death.

Hold the charging socket and plug by their designated grip area.

⚠ WARNING

Observe the following points when touching the charging cord, AC adapter or the building's power outlet.

- **Do not touch the charging cord, AC adapter, or the building's power outlet with wet hands.**
- **Do not touch the charging cord, AC adapter, or the building's power outlet if the they are wet.**

Touching wet electrical components or outlets or touching them with wet hands may cause electrocution and increases the chance of serious injury or death.

Make sure your hands are dry and the charging cord, AC adapter, the building's power outlet are dry before touching them.

⚠ CAUTION

You can be hurt if you mishandle or misuse the battery.

- **Do not short the battery terminals.**
- **Do not immerse the battery in water.**
- **Do not heat or throw the battery in a fire.**
- **Do not expose the battery to environments where the temperature exceeds 131 °F (55 °C).**
- **Do not drop or crush the battery.**
- **Do not use the battery if the charging time is unusually long.**
- **Do not solder.**
- **Do not put in microwave oven, oven, or high-pressure container.**
- **Do not use the battery if any mechanical abuse is detected during charging, normal use, or storage of battery pack.**
- **Do not use the battery in case of leakage or if smells are released from the battery.**
- **In case of solvent in your eyes, wash them with fresh water as soon as possible and do not rub eyes.**
- **Clean the battery using a clean dry cloth if the surface of the battery is dirty.**

© 2023 American Honda Motor Co., Inc. - All Rights Reserved.

- This product should not be used by children or persons with reduced physical, sensory or mental capabilities, or lack of experience and knowledge, unless they have been given supervision or instruction (IEC 60335-1/A2:2006).
- Unsupervised children should not play with the product (IEC 60335-1/A2:2006).
- Adult supervision is required.
- Make sure to use the carry handle when carrying Motocompacto. If you carry Motocompacto in any other way, you risk damaging the scooter, and injury.

Riding

- Use caution while riding, be aware of your surroundings and make sure you are always in control of your Motocompacto.
- Always wear proper attire while operating Motocompacto; including but not limited to a helmet, with appropriate certification, kneepads and elbow pads, shoes with shoelaces securely tied, and no loose clothing.
- Do not operate while distracted such as using electronic devices, cell phones, headphones or anything that may limit rider hearing.
- Always give way to pedestrians.
- Do not ride after drinking alcohol or taking prescription medication.
- Do not carry items while riding.
- Motocompacto should only be ridden by one rider at a time.
- Do not allow hands, feet, hair, body parts, or clothing to come in contact with any of the moving parts, wheels, or drivetrain while Motocompacto is in motion.
- Motocompacto should not be operated to perform racing, stunt riding, or other maneuvers which may cause loss of control, or may cause uncontrolled operator actions or reactions.
- Avoid all sharp bumps, drainage grates, and sudden surface changes. Motocompacto may suddenly stop.
- Avoid streets and surfaces with standing water, snow/ice, sand, gravel, dirt, leaves and other debris. Wet weather impairs traction, braking and visibility.

© 2023 American Honda Motor Co., Inc. - All Rights Reserved.

Keep Your Honda in Safe Condition

It's important to keep your scooter properly maintained and in safe riding condition.
Inspect your scooter before every ride and perform all recommended maintenance. Never exceed load limits (265 lbs (120 kg)), and do not modify your scooter or install accessories that would make your scooter unsafe.

If You are Involved in a Crash

Personal safety is your first priority. If you or anyone else has been injured, take time to assess the severity of the injuries and whether it is safe to continue riding. Call for emergency assistance if needed. Also follow applicable laws and regulations if another person or vehicle is involved in the crash.

If you decide to continue riding, first turn the power button to OFF, and evaluate the condition of your scooter. Check the tightness of critical nuts and bolts, and check the handlebar, brake lever, brakes, and wheels. Ride slowly and cautiously. Your scooter may have suffered damage that is not immediately apparent. Have your scooter thoroughly checked at a qualified Honda or Acura service facility as soon as possible.

Safety Precautions

- Ride cautiously and keep your hands on the handlebar and feet on the footpegs.

Protective Apparel

Make sure that you are wearing an approved helmet, eye protection, and high-visibility protective clothing. Avoid wearing loose clothes that could get caught on any part of the scooter.

Helmet

It should be safety-standard certified, high-visibility, and the correct size for your head.

- Must fit comfortably but securely, with the chin strap fastened

⚠ WARNING

Not wearing a helmet increases the chance of serious injury or death in a crash.

Make sure that you always wear an approved helmet and protective apparel.

© 2023 American Honda Motor Co., Inc. - All Rights Reserved.

Accessories & Modifications

We strongly advise that you do not add any accessories that were not specifically designed or approved for your scooter by Honda or make modifications to your scooter from its original design. Doing so can make it unsafe. Modifying your scooter may also void your warranty. Before deciding to install accessories on your scooter, be certain the modification is safe and legal.

⚠ WARNING

Improper accessories or modifications can cause a crash in which you can be seriously hurt or killed.

Follow all instructions in this owner's manual regarding accessories and modifications.

Do not pull a trailer with, or attach a sidecar to, your scooter. Your scooter was not designed for these attachments, and their use can seriously impair your scooter's handling.

© 2023 American Honda Motor Co., Inc. - All Rights Reserved.

3 Quick Start Guide

3.1 Parts Location

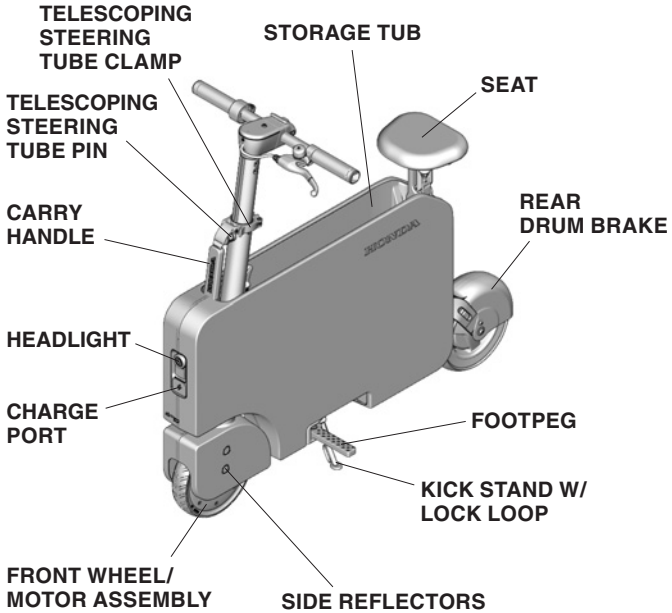

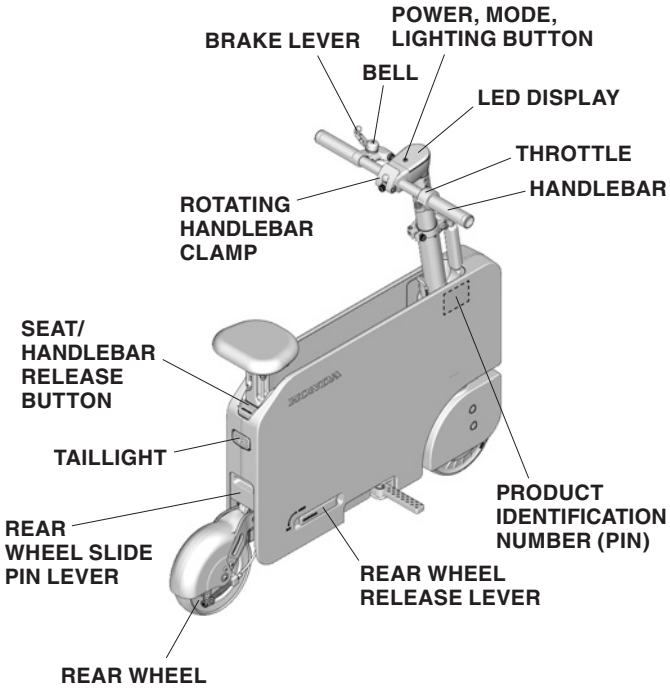

© 2023 American Honda Motor Co., Inc. - All Rights Reserved.

3.2 Battery/Charging

- The battery comes partially charged and should be fully charged before use.
- Only use the charger supplied with the scooter.
- If your scooter doesn't turn on, plug it into the charger - if the scooter goes more than 30 days without being used, it reverts to shipping mode and must be charged to reset the battery.
- Disconnect the charger after the battery has been fully charged.
- Unplug the charger and disconnect from the scooter when not in use.
- The battery should be charged once every three months.
- Fully charge the battery before storing.
- Keep away from fire and flammable materials.

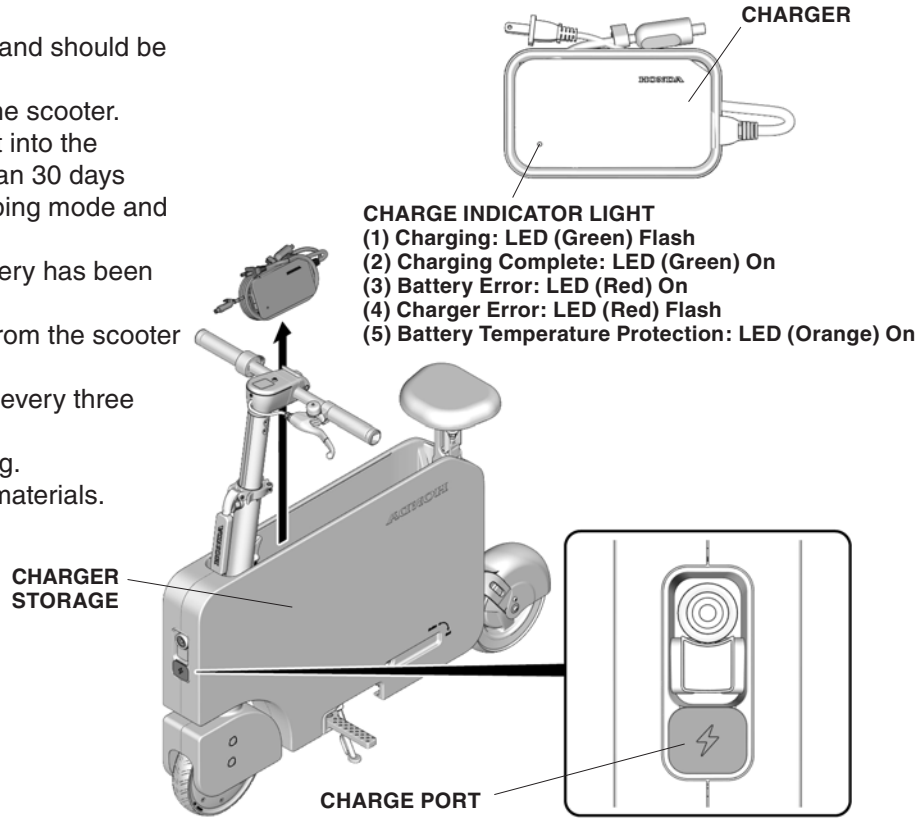

© 2023 American Honda Motor Co., Inc. - All Rights Reserved.

3.3 Unfolding

⚠ CAUTION

If not careful when unfolding or folding the scooter, you could pinch your fingers causing injury.

Always make sure not to place your fingers where they might be pinched. Fold and unfold the scooter as instructed in the manual.

1. Push the seat/handlebar release button and rotate the handlebar.

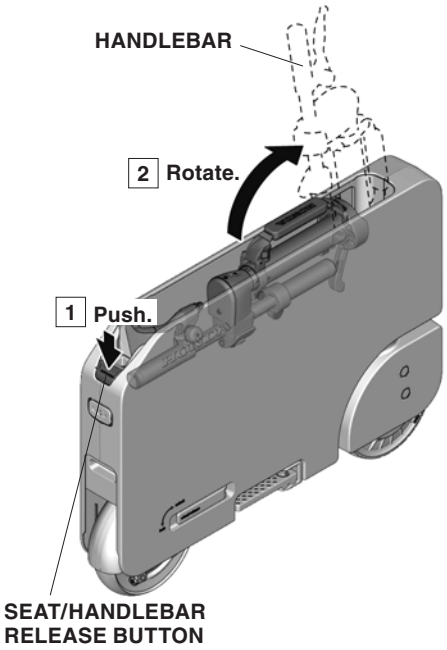

2. Open the telescoping steering tube clamp. Pull and lift the handlebar. Make sure you hear a click when the tube locks into place.

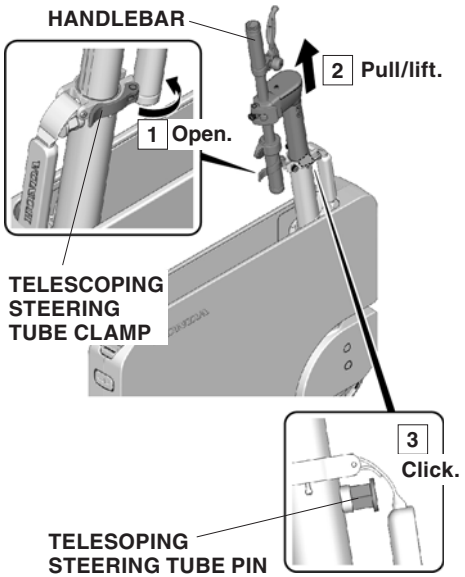

© 2023 American Honda Motor Co., Inc. - All Rights Reserved.

3. Close the telescoping steering tube clamp. Close the lower clamp.

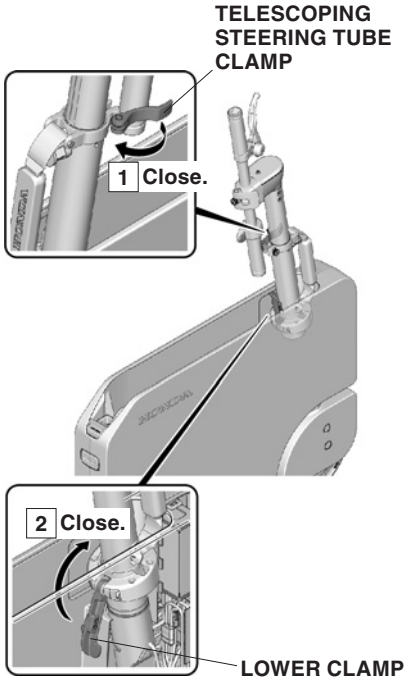

4. Push the release clip and open the rotating handlebar clamp. Rotate the handlebar.

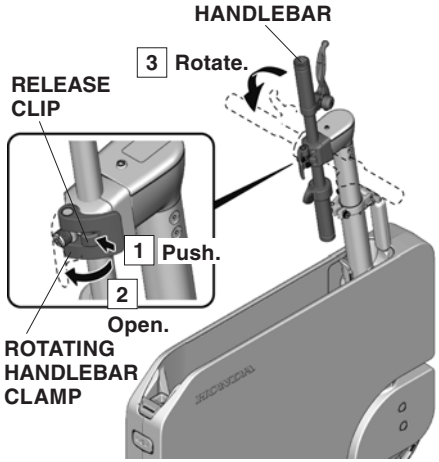

5. Close the rotating handlebar clamp. Make sure you hear a click and the handlebar is clamped tightly.

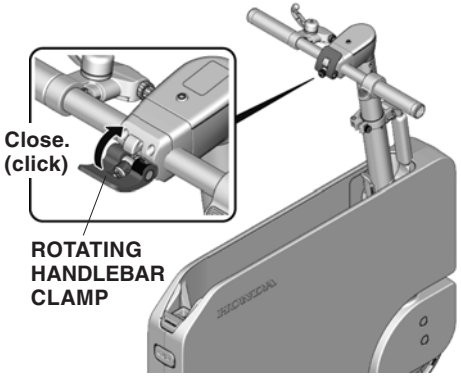

© 2023 American Honda Motor Co., Inc. - All Rights Reserved.

6. Remove the seat.

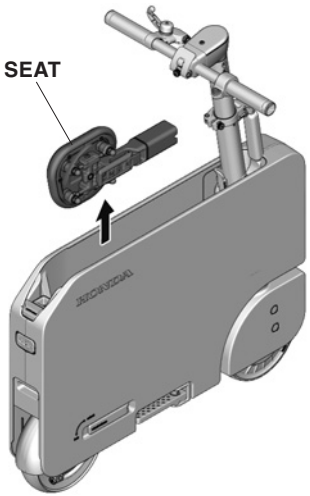

7. Unfold the seat.

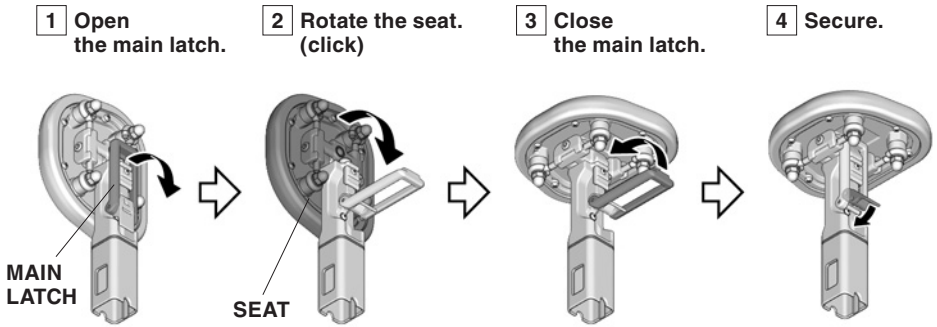

© 2023 American Honda Motor Co., Inc. - All Rights Reserved.

8. Assemble the seat and make sure you hear a click.

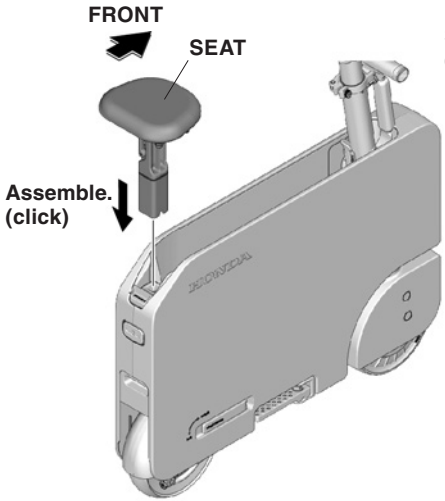

9. Pull out and rotate the rear wheel release lever. Pull out the rear wheel and make sure you hear a click.

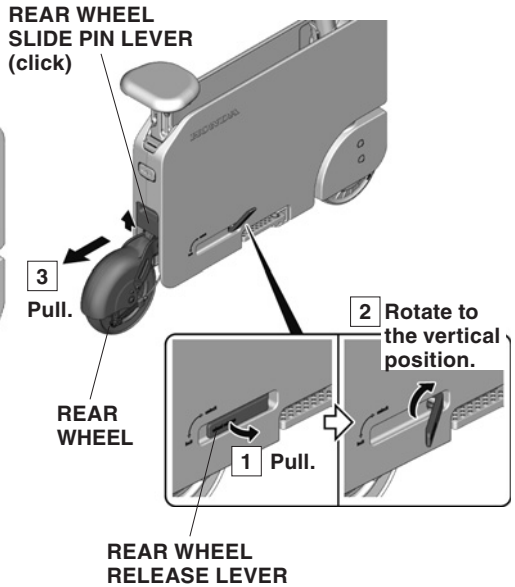

10. Rotate and push the rear wheel release lever into the locked position.

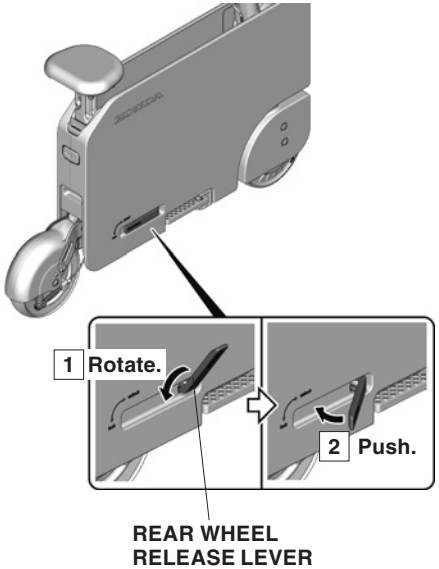

© 2023 American Honda Motor Co., Inc. - All Rights Reserved.

11. Lift and rotate the footpegs into position. Make sure the footpegs are locked in place.

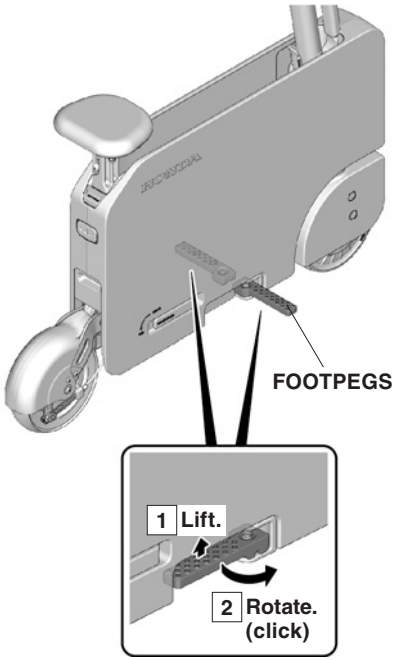

3.4 Getting Started

Before each ride, check that the scooter is completely unfolded and latched, the handlebar, seat and rear wheel are secured, the brake system works correctly and the front light, rear light, and brake light function properly.

Keep your feet on the footpegs. Do not ride with your feet dangling over the sides and always stay seated while riding.

Keep both hands on the handlebars.

3.5 Starting and Stopping

- Sit on the scooter's seat.
- Push and hold the power button to turn the scooter on.
- Propel the scooter to 1 mph (2 km/h) rolling start then gradually apply the throttle to start moving.
- Release the throttle and gradually apply the hand brake until the scooter comes to a stop.

© 2023 American Honda Motor Co., Inc. - All Rights Reserved.

3.6 Display and Power Modes

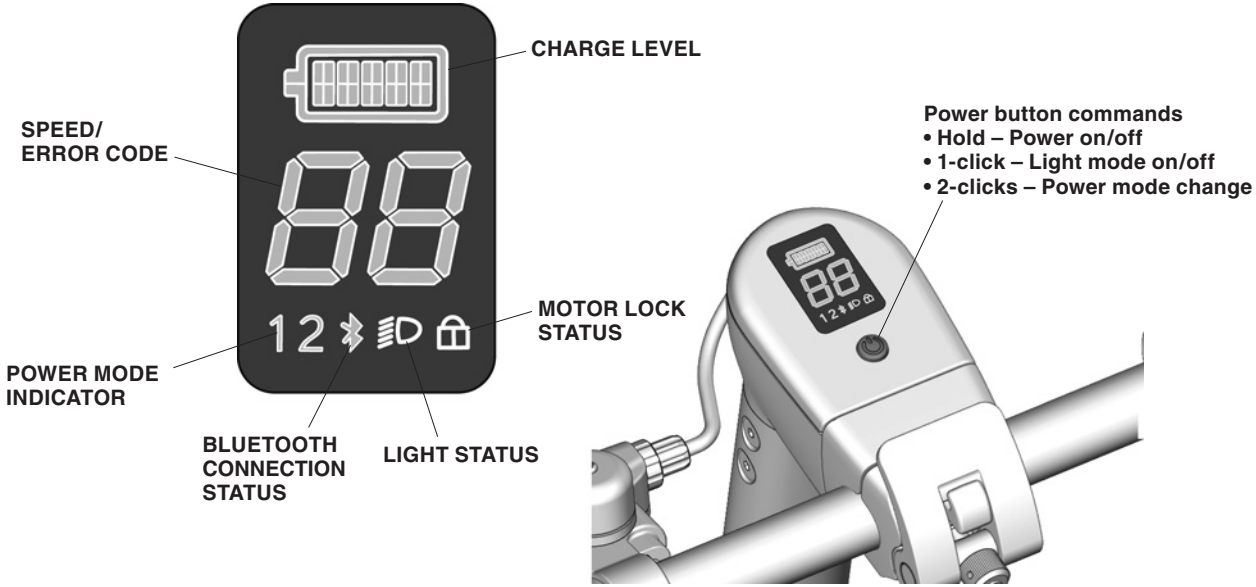

© 2023 American Honda Motor Co., Inc. - All Rights Reserved.

Motocompacto will start up in power mode 1.
To change between power modes, double-click the power button.

- Mode 1 (1 mph (2 km/h) rolling start before active throttle, 10 mph (16 km/h) max speed)

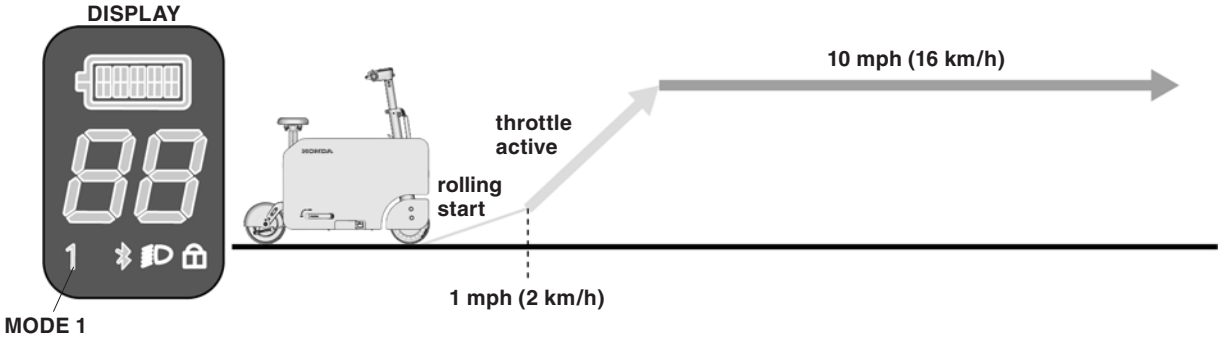

- Mode 2 (throttle active from 0 mph (0 km/h), 15 mph (24 km/h) max speed)

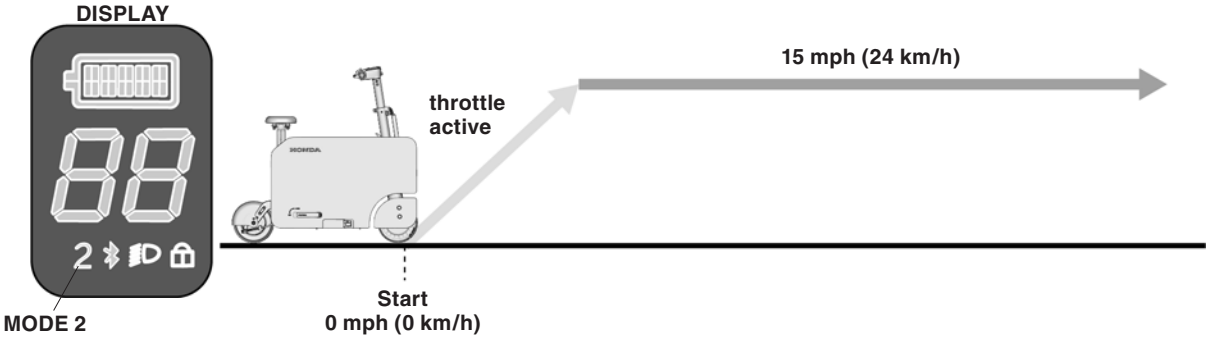

© 2023 American Honda Motor Co., Inc. - All Rights Reserved.

3.7 Folding

⚠ CAUTION

If not careful when unfolding or folding the scooter, you could pinch your fingers causing injury.

Always make sure not to place your fingers where they might be pinched. Fold and unfold the scooter as instructed in the manual.

1. Lift and rotate the footpegs.

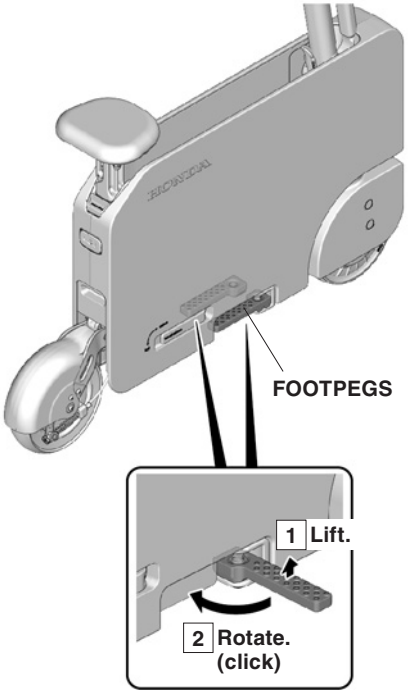

2. Pull out and rotate the rear wheel release lever. Lift the rear wheel slide pin lever. Push the rear wheel in.

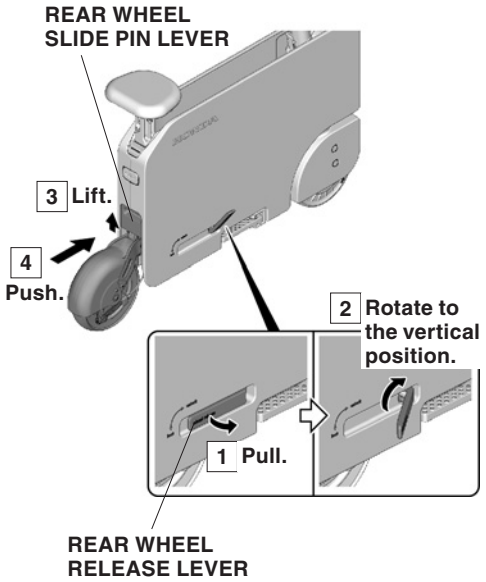

© 2023 American Honda Motor Co., Inc. - All Rights Reserved.

3. Rotate and push the rear wheel release lever into the locked position.

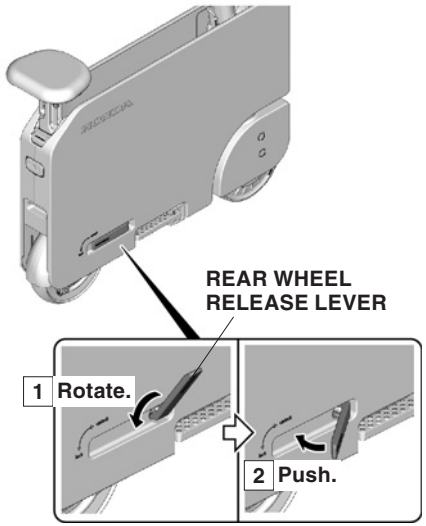

4. Push the seat/handlebar release button and remove the seat.

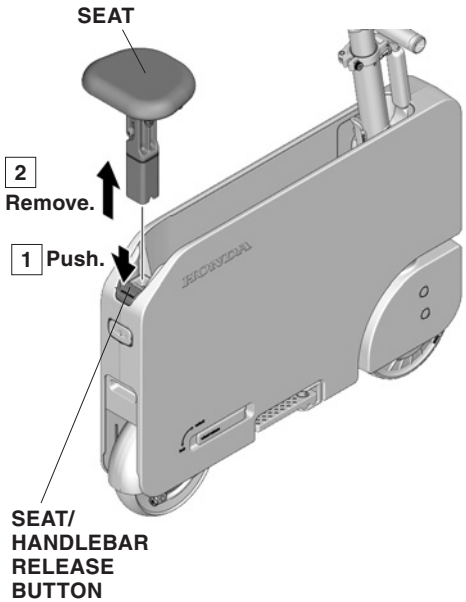

© 2023 American Honda Motor Co., Inc. - All Rights Reserved.

5. Fold the seat.

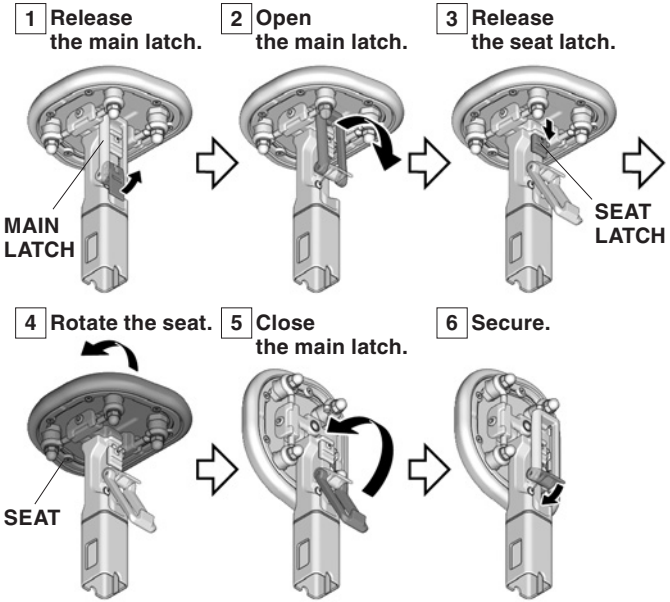

6. Stow the seat.

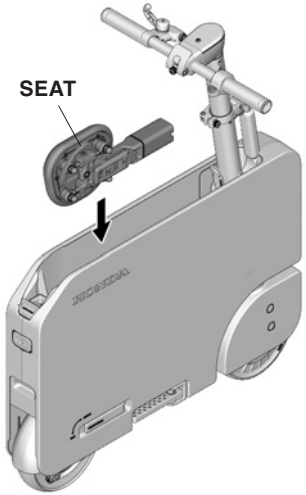

© 2023 American Honda Motor Co., Inc. - All Rights Reserved.

7. Push the release clip and open the rotating handlebar clamp. Rotate the handlebar.

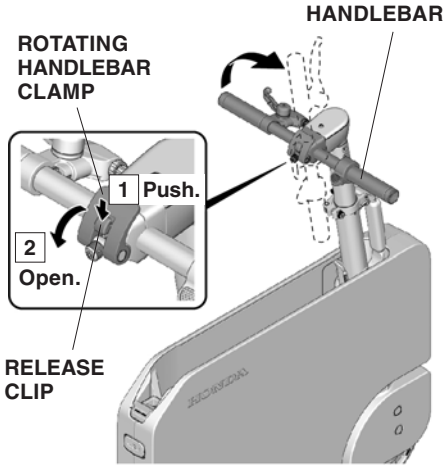

8. Close the rotating handlebar clamp.

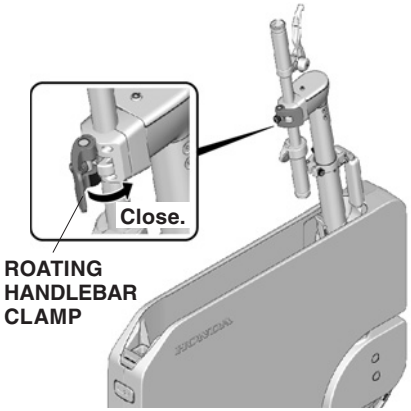

9. Lift the red lock tab and open the lower clamp.

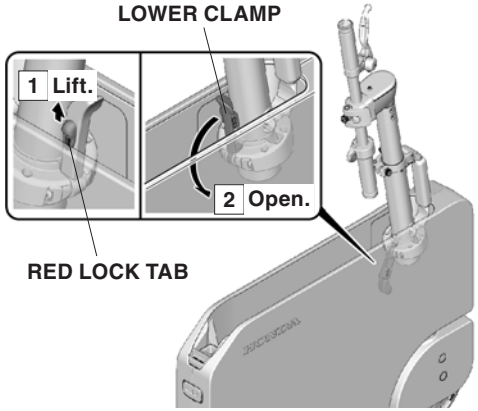

© 2023 American Honda Motor Co., Inc. - All Rights Reserved.

10. Open the telescoping steering tube clamp. Pull the telescoping steering tube pin. Push and collapse the steering tube.

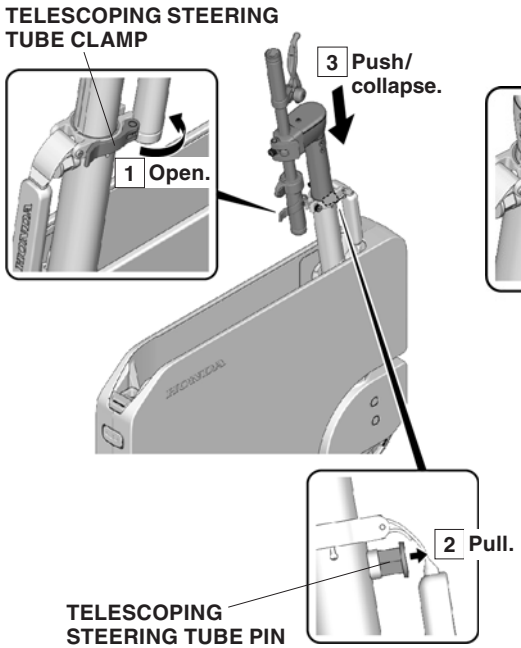

11. Close the telescoping steering tube clamp.

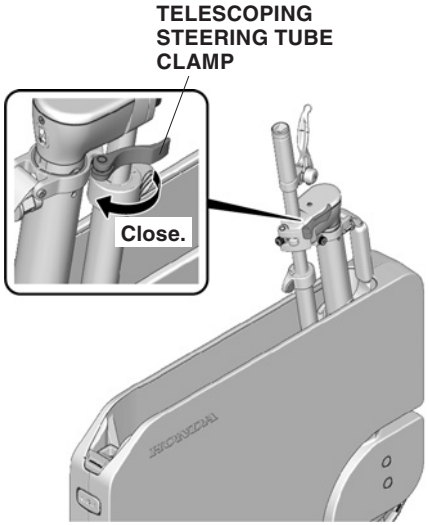

12. Rotate the handlebar until you hear a click. Pull up to make sure the handlebar is securely stowed.

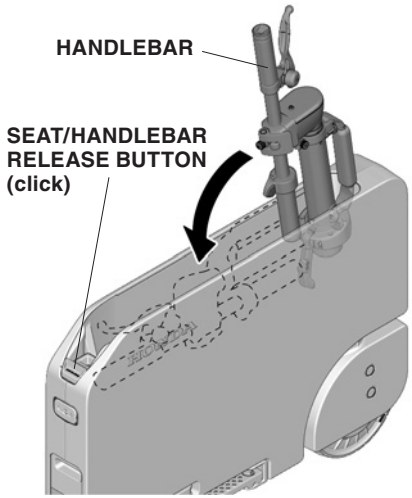

© 2023 American Honda Motor Co., Inc. - All Rights Reserved.

Care 4

Care

- Replace worn or broken parts immediately.
- Clean using water and a mild detergent to carefully wipe the surface, then wipe with a dry cloth.
- Do not wash or spray down using high-pressure water, the electrical components or electrical systems could get wet and malfunction or cause personal injury.
- Only use a dry cloth to clean the drive wheel and any electrical components.
- If there is an abnormal noise or riding condition, stop operation and see your local dealer.
- To avoid loss of battery performance, do not store the scooter in extreme temperatures for an extended period of time.
- Store the scooter in a cool environment.

Diposal

To protect the environment, do not dispose of this product, battery, etc. using standard waste collection. Observe the local laws and regulations or consult your authorized Honda dealer for disposal.

© 2023 American Honda Motor Co., Inc. - All Rights Reserved.

Maintenance 5

5.1 Brake Adjust

1. Fully tighten the lock nut and fine adjustment nut so there is no space between the nuts and the hand brake assembly as shown.

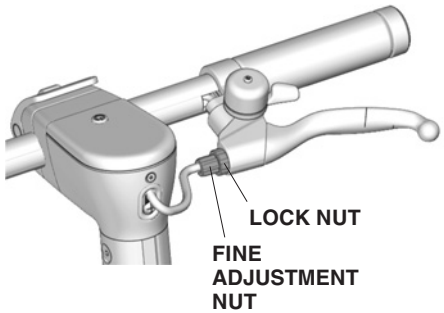

2. Rotate the brake swing arm and tighten the adjustment nut until you can hear the brake drag.

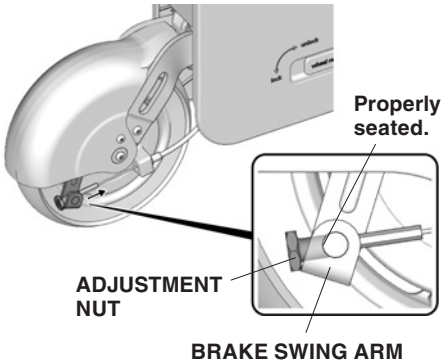

3. Loosen the adjustment nut one half turn at a time until the rear wheel spins freely without brake drag.
4. Make sure the adjustment nut is properly seated as shown.
5. Use the fine adjustment nut for small brake adjustments by rotating the lock nut and fine adjustment nut counter clockwise until the brake drags slightly. Then turn both nuts clockwise until the brake no longer drags. Turn the lock nut clockwise and tighten to lock the fine adjustment nut in place.

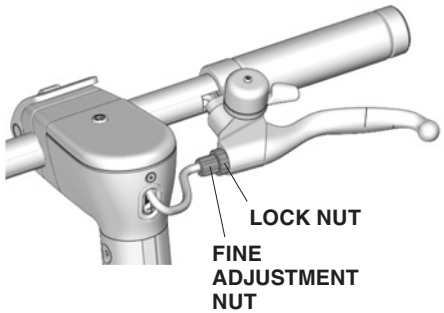

6. Test the brake function to confirm it is working properly.

© 2023 American Honda Motor Co., Inc. - All Rights Reserved.

5.2 Brake Cable Lubrication

1. Lubricate the brake cable occasionally to ensure smooth operation.

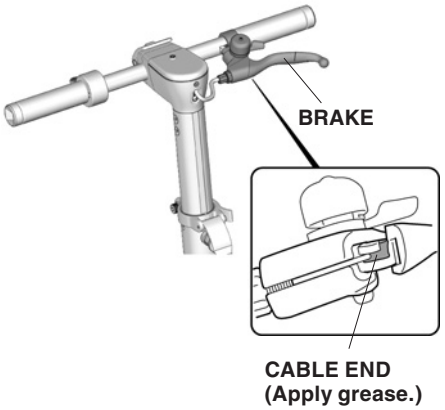

2. Apply grease to the brake cable location shown.

5.3 Foot Peg Lubrication

1. Lubricate the foot pegs occasionally to ensure smooth operation.

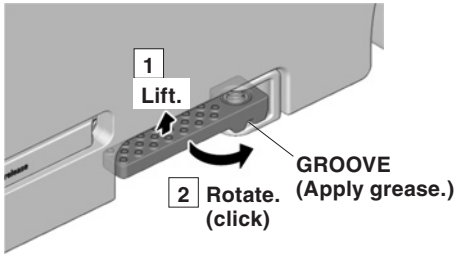

2. Apply grease inside the groove on the right foot peg.
3. Lift and rotate the foot peg a few times to distribute the grease.
4. Repeate on the left foot peg.

- If the folding latches function abnormally or are out of adjustment, see your local dealer.

© 2023 American Honda Motor Co., Inc. - All Rights Reserved.

6 Troubleshooting

Error Codes & Troubleshooting

Error Code	Description	Product Response	Probable Cause or Action
Er22	Throttle sensor error	No driving output	Release the throttle. If error code is still displayed, see your local dealer.
Er24	Motor hall sensor error	No driving output	See your local dealer.
blinking	Position sensor I warning (wheel folding)	No driving output	Make sure the rear wheel is fully extended. If error code is still displayed, see your local dealer.
blinking	Position sensor II warning (handlebar folding)	No driving output	Make sure the handlebar is set correctly. If error code is still displayed, see your local dealer.
Er71	Drive communication error	No driving output	See your local dealer.
Er72	Battery communication error	Rides normally but with error code displayed	See your local dealer.
OS	Over speed (22 mph (35 km/h))	No driving output	Slow down.

© 2023 American Honda Motor Co., Inc. - All Rights Reserved.

Error Code	Description	Product Response	Probable Cause or Action
Pr31	Motor high temperature protection	Slows down and stops	Turn the power off and wait for it to cool down. If error code is still displayed, see your local dealer.
Pr32	Control unit high temperature protection	Slows down and stops	Turn the power off and wait for it to cool down. If error code is still displayed, see your local dealer.
Pr33	Battery high temperature protection	Slows down and stops	Turn the power off and wait for it to cool down. If error code is still displayed, see your local dealer.
blinking	Low voltage	Slows down and stops	Recharge the battery.
Pr42	Over voltage protection	No driving output	Stop riding or charging and wait for it to cool down. If error code is still displayed, see your local dealer.
Pr43	Current spike	No driving output	Change riding environment or condition and wait for the controller to recover.

© 2023 American Honda Motor Co., Inc. - All Rights Reserved.

Error Code	Description	Product Response	Probable Cause or Action
Pr45	Motor stall	No driving output	Change riding environment or condition and wait for the motor to recover.
Pr46	Throttle problem	No driving output	Release the throttle and wait until error code clears. If error code is still displayed, see your local dealer.

© 2023 American Honda Motor Co., Inc. - All Rights Reserved.

7 Specifications

Product dimensions	
Rider weight limit	265 lbs (120 kg) (single rider)
Product weight	41.3 lbs (18.75 kg)
Recommended age	14+
Tire size	8 in semi-solid rubber
Max speed	Up to 15 mph (24 km/h)
Battery	36 V, Nominal 6.8 Ah, Rated 6.5 Ah Lithium-ion
Motor	250 W Hub Motor
Charger	100 - 240 V
Charge time	Up to 4 hours

© 2023 American Honda Motor Co., Inc. - All Rights Reserved.

8 Warranty

Limited Warranty

This warranty is limited to the following Honda products when distributed by American Honda Motor Co., Inc. The following warranty applies to products purchased at retail.

PRODUCTS COVERED BY THIS WARRANTY:	LENGTH OF WARRANTY: (FROM DATE OF ORIGINAL RETAIL PURCHASE)
Motocompacto	12 months

To Qualify for This Warranty:

The product must be purchased in the United States from American Honda or a dealer authorized by American Honda to sell those products. This warranty applies to the first retail purchaser and each subsequent owner during the applicable warranty time period, unless noted otherwise.

What American Honda Will Repair or Replace Under Warranty:

American Honda will repair or replace, at its option, any part that is proven to be defective in material or workmanship under normal use during the applicable warranty time period. Warranty repairs and replacements will be made without charge for parts or labor. Anything replaced under warranty becomes the property of American Honda Motor Co., Inc. All parts replaced under warranty will be considered as part of the original product, and any warranty on those parts will expire coincident with the original product warranty.

© 2023 American Honda Motor Co., Inc. - All Rights Reserved.

To Obtain Warranty Service:

You must, at your expense, take the Honda product and proof of purchase to any Honda or Acura dealer in the United States who is authorized to sell and/or service that product, during the dealer's normal business hours. To locate a dealer near you, visit our web site at https://mygarage.honda.com. Call your local dealership to verify that they are participating in motocompacto sales and service.

If you are unable to obtain warranty service or are dissatisfied with the warranty service you receive, contact the owner of the dealership involved; normally this will resolve the problem.

Honda dealership personnel are trained professionals able to deal with any problems you may encounter with your scooter. If, however, you are faced with a problem that they cannot resolve to your satisfaction, contact Honda Customer Services.

U.S. Owners
American Honda Motor Co., Inc.
Honda Automobile Customer Service
Mail Stop CHI-5
1919 Torrance Blvd.
Torrance, CA 90501-2746
Tel: 1 (800) 999-1009

© 2023 American Honda Motor Co., Inc. - All Rights Reserved.

Exclusions:

1. Any damage or deterioration resulting from the following:
   - Neglect of the periodic maintenance as specified in the product owner's manual
   - Improper repair or maintenance
   - Operating methods other than those indicated in the product owner's manual
   - The use of non-genuine Honda parts and accessories other than those approved by Honda
   - Exposure of the product to soot and smoke, chemical agents, bird droppings, sea water, salt, or other corrosive environments
   - Collision, neglect, unauthorized alteration, misuse, incorporation or use of unsuitable attachments or parts
   - Normal wear and tear (including, but not limited to, normal fading of painted or plated surfaces, sheet peeling, and other natural deterioration)
2. Consumable parts: Honda does not allow warranty for parts deterioration due to normal wear and tear.
3. Cleaning, adjustment, and normal periodic maintenance work (cable adjustments).
4. Any product that has ever been declared a total loss or sold for salvage by a financial institution or insurer.

Disclaimer of Consequential Damage and Limitation of Implied Warranties:

American Honda disclaims any responsibility for loss of time or use of the product, transportation, commercial loss, or any other incidental or consequential damage. Any implied warranties are limited to the duration of this written limited warranty. Some states do not allow limitations on how long an implied warranty lasts and/or do not allow the exclusion or limitation of incidental or consequential damages, therefore the above exclusions and limitations may not apply to you. This warranty gives you specific legal rights, and you may also have other rights, which vary from state to state.

© 2023 American Honda Motor Co., Inc. - All Rights Reserved.

Memo

© 2023 American Honda Motor Co., Inc. - All Rights Reserved.

Memo

© 2023 American Honda Motor Co., Inc. - All Rights Reserved.

Memo

© 2023 American Honda Motor Co., Inc. - All Rights Reserved.

08Z15-PR8-1001-80 Printed in China

© 2023 American Honda Motor Co., Inc. - All Rights Reserved.