Product specification acknowledgment.

Shenzhen Maya antenna lab

R&D center in ShenZhen

The mobile communication terminal antenna

PRODUCT NAME Bluetooth wire 0.8*25

CUSTOMER NAME _____

account party	Development party		
Customer acknowledges	Quality Department	R&D Department	approved by
Date: 年 月 日	Date: 年 月 日		

Shenzhen Maya communication equipment Co., LTD
Site：A second floor, minqing road, minqing road, longhua street, baoan district, shenzhen city.
Tel: 86-755-82916162 Fax: 86-755-82916227

1. aim

For the Production from shenzhen maya communication equipment co., LTD. That mobile communication terminal antenna product specifications and test methods for specification, avoid the test conditions, the error caused by different methods

2.Antenna debug design requirement frequency band.

frequency	frequency band
BT	2.4GHZ
other	/

3.Product cell phone and sky chart.

The antenna

4.electrical

4.1 Test method description and data.

Device name	use
Vector Network Analyzer	S11/Impedance/ Passive Test
Agilent 8960 SP6010 R&S CMU200	**GSM, GPRS, EDGE, CDMA2000, 1xev-do, td-scdma, WCDMA, HSDPA mobile phone mobile communication equipment test.**
R&S CMW500 MT8820C	**Including td-scdma, WCDMA, HSDPA, LTE, WIFI, GPS mobile phone mobile communication equipment test.**
Agilent E4438C	**Test active GPS**
MVG Chamber	**Passive Test / OTA active Test / Efficiency/Gain**

4.2Passive Test Report

Test equipment: network analyzer.

Test method: with a 50 ohm CABLE CABLE from the instrument test port is derived, using the calibration after a calibration mechanism of SMA connector, connecting hand records related to the frequency points corresponding return loss and standing wave ratio data.

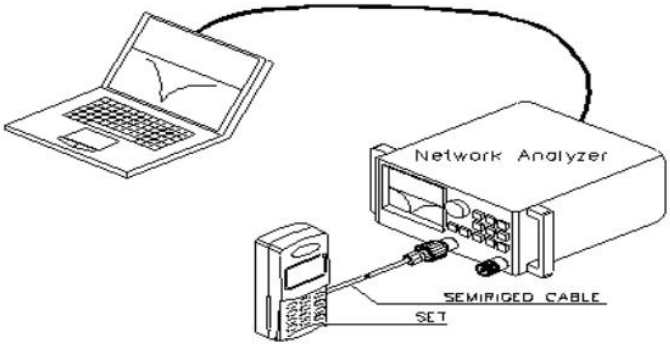

测试示意图

4.3 Active Test Report

TRP/TIS

From testing tools, measuring, network analyzer, full waves far field ETS, French MVG SG24LT (Satmio) near field 3 d microwave dark room, the high precision positioning system and its controller and the computer with automatic test procedure test environment: the temperature of 22 ℃ + 3 ℃, humidity 60% plus or minus 60% test methods: Using EST or 24 lt Satimo system software Test method and calculation of TRP when tested TRP, DUT (Device Under Test) is in a state of maximum transmitted power, including three to choose channel Test, by positioning system control the location of the DUT, with 15 degrees for step length, measuring three dimensional space, the effective radiated power (EIRP) at various points through the average of the integral sphere, computation formula is as follows

$$TRP \cong \frac{\pi}{2NM}\sum_{i=1}^{N-1}\sum_{j=0}^{M-1}\left[EiRP_{\theta}(\theta_i,\phi_j)+EiRP(\theta_i,\phi_j)\right]\sin(\theta_i)$$

In TIS test, the DUT at the maximum transmission power of the state, including three to choose channel test, by controlling the location of the DUT, at 30 degrees for the step length, measuring the three dimensional space each point receiving sensitivity, the average of the sphere by integral calculation, calculation formula is as follows:

$$TIS \cong \frac{2NM}{\pi\sum_{i=1}^{N-1}\sum_{j=0}^{M-1}\left[\frac{1}{EIS_{\theta}(\theta_i,\phi_j)}+\frac{1}{EIS_{\phi}(\theta_i,\phi_j)}\right]\sin(\theta_i)}$$

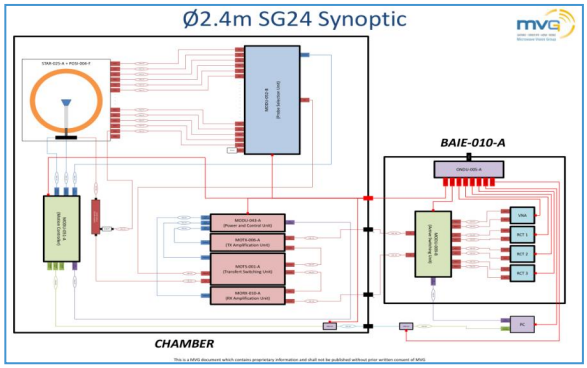

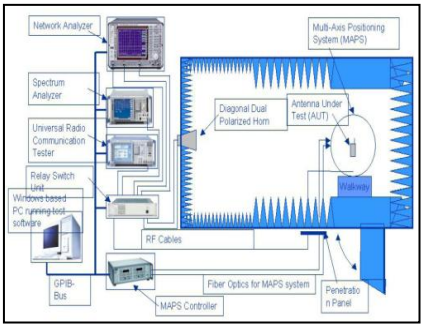

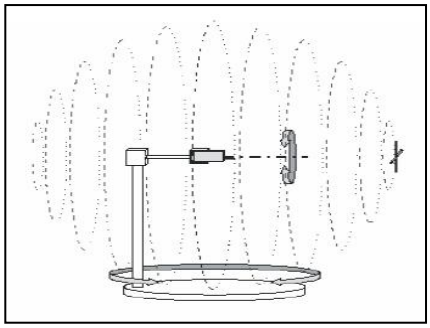

5. Bluetooth gain

Frequency	Efficiency	Efficiency . dBi
2400000000	12.36%	-9.080553498
2410000000	12.46%	-9.044166636
2420000000	12.13%	-9.161494625
2430000000	12.73%	-8.95028647
2440000000	12.75%	-8.945721921
2450000000	12.59%	-8.998292445
2460000000	12.36%	-9.079604185
2470000000	12.39%	-9.069916903
2480000000	12.11%	-9.16696272
2490000000	11.89%	-9.248663776
2500000000	12.00%	-9.209484172

Frequency	Gain . dBi
2400000000	-3.26588809
2410000000	-2.978090723
2420000000	-2.784448778
2430000000	-2.806968199
2440000000	-3.133783086
2450000000	-3.074628824
2460000000	-3.352918692
2470000000	-3.856142243
2480000000	-4.180688328
2490000000	-4.1135477
2500000000	-4.109099048

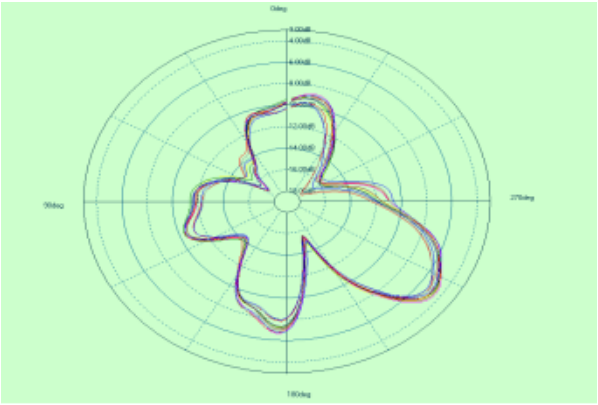

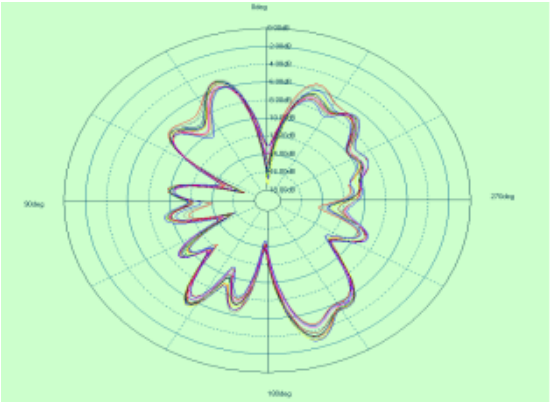

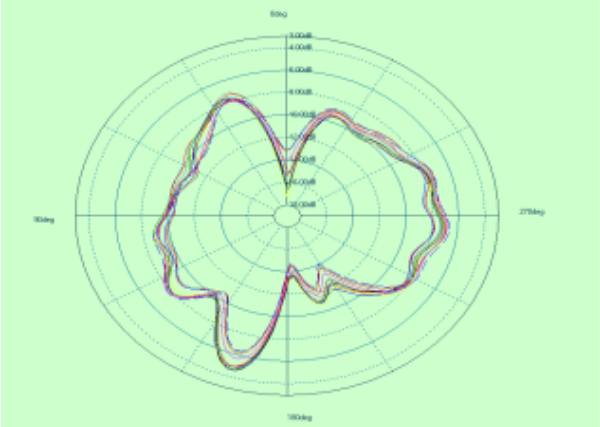

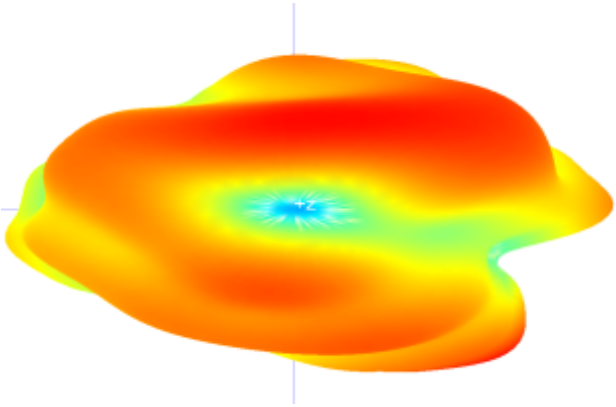

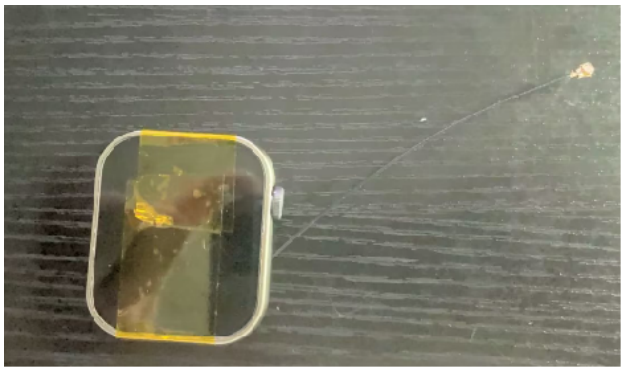

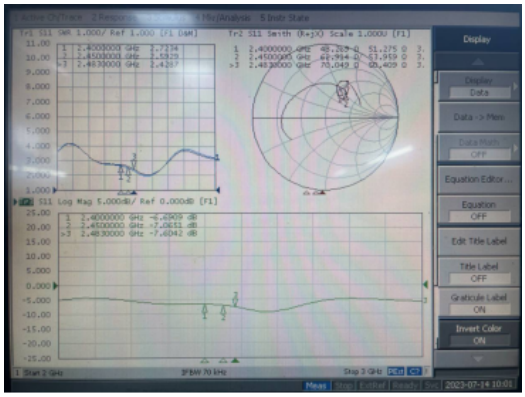

6. structural drawings

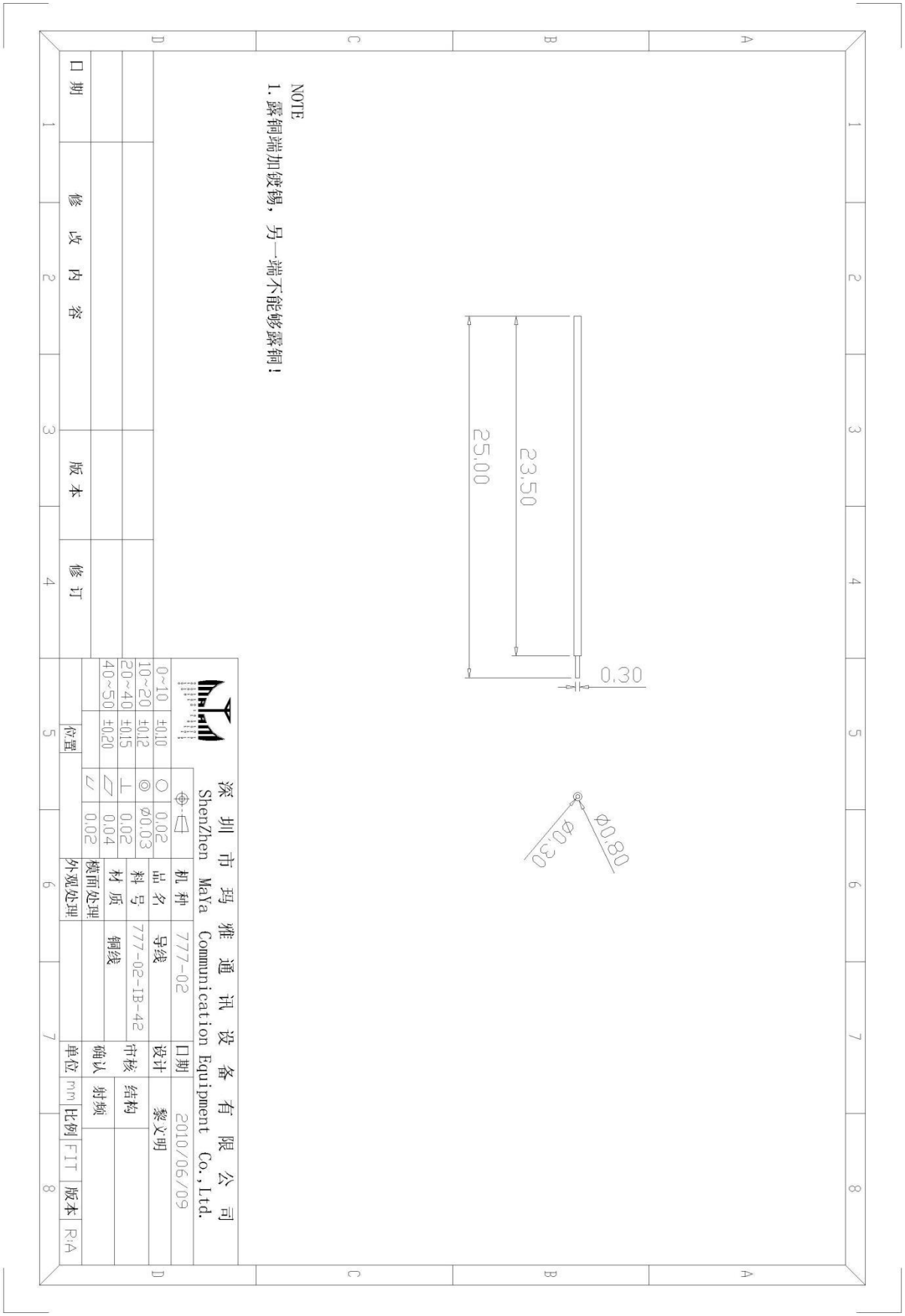

7.Warning Sign

1. The section on performance and structure validation
★Please confirm the appearance and performance of the product before you sign the acknowledgement.
★Please be sure to provide the final mass production trial production machine to our company or take back our company verification before mass production
★As the product of this acknowledgement is a highly sensitive object, please be sure to keep the testing machine for follow-up
★As this product is a custom-made object, the use of the targeted, customers in material replacement or for non-designated items, please be sure to change the material or non-designated items of the machine sent to our company to verify the radio-frequency performance, otherwise, may cause the use state and the design state inconsistent serious hidden danger, to our company sealed debugging sample function confirmation, ensure our company debugging sample function completely normal, prevent function abnormal to the antenna performance error caused by the antenna performance
2. About product storage
★As this product has printing ink on the surface, adhesive on the back and electroplate, please make sure the temperature is between 23 ° c-27 ° C and the relative humidity is below 60% during storage or transportation, no strong acid, no sulfur, no oxygen storage or transport environment
★As the product back glue on the environment requirements are more stringent, please customers must be received after the product, in the product quality guarantee period to ensure the reliability of the product
3. Tips for using the product
★Due to the special structure of this product, please use this product must be in full contact with the pasted objects, and pasted objects must not be residual chemicals (release agent, etc.) or as far as possible do not use the raw materials with release agent, to ensure that the product is in good working condition, please clean the surface of the pasted article before using the product to ensure that there is no chemical residue on the surface of the pasted article
4. Statement of Quality Assurance for this product
★This product quality guarantee period is 12 months, if your use and storage environment to meet the above requirements, in the valid guarantee period of any quality problems, and determined that our products are abnormal, our company can provide free replacement services, after 12 months, our products provide life-long consultation and paid replacement services
★This product is a special custom device, please receive the product must within 3 working days of the product quantity confirmation