RUNHOOD | PORTABLE POWER STATION

USER MANUAL

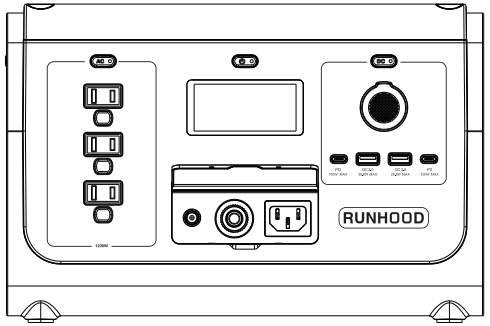

⚠ WARNING

1. Keep this product dry and do not expose it to high temperatures or environments where it may be splashed or immersed in water.
2. Inappropriate use of the product may result in fire hazards leading to property damage or personal injuries.
3. Adhere to local laws and regulations in battery recycling and battery disposal.
4. Use caution when transporting the product.
5. Children and individuals with disabilities should operate the equipment under supervision.

RUNHOOD POWER INC.
3980-D Valley Blvd, Walnut, CA 91789
866–685–9868 (toll free)
service@runhoodpower.com
www.runhoodpower.com

120V 60Hz

CONTENTS

■ PRODUCT SAFETY GUIDELINES ---- 1
- ◆ BEFORE USING THIS PRODUCT ---- 1
- ◆ WARNINGS ---- 1
- ◆ PRODUCT USE ---- 1
- ◆ CHARGING ---- 2
- ◆ PRODUCT STORAGE AND TRANSPORTATION ---- 2
- ◆ BATTERY DISPOSAL ---- 2
- ◆ PRODUCT MAINTENANCE ---- 2
- ◆ TRAVEL NOTICE ---- 2

■ RUNHOOD PORTABLE POWER STATION ---- 3
- ◆ INTRODUCTION TO MODULES ---- 3
  - ✧ HOST ENGINE 1200 (HE1200-US) ---- 3
  - ✧ AC ENGINE (AE80) ---- 11
  - ✧ USB ENGINE (UE256) ---- 12
  - ✧ ENERGY BAR (EB324) ---- 13
- ◆ ACCESSORIES ---- 14
- ◆ DIY SCHEMES ---- 16
  - ✧ 648Wh 1200W (HE1200-US + EB324 * 2) ---- 16
  - ✧ 324Wh 80W (AE80 + EB324) ---- 17
  - ✧ 324Wh 256W (UE256 + EB324) ---- 17
- ◆ CHARGING METHODS ---- 18
  - ✧ GUIDANCE ON CHARGING FOR EB324 WITH HE1200-US ---- 18
  - ✧ GUIDANCE ON CHARGING FOR EB324 WITH UE256 ---- 19
  - ✧ GUIDANCE ON CHARGING FOR EB324 WITH PHOTOVOLTAIC PANEL AND PHOTOVOLTAIC ADAPTER ---- 19
  - ✧ INSTRUCTIONS FOR CONNECTING MULTIPLE PHOTOVOLTAIC PANELS ---- 20

PRODUCT SAFETY GUIDELINES

BEFORE USING THIS PRODUCT

Please read all instructions carefully before starting the RUNHOOD Portable Power Station.

WARNINGS

- Keep the RUNHOOD Portable Power Station away from moist. Do not expose the product to high temperatures, water leaks or water immersion.
- Do not disassemble or remove the protective cover.
- Do not puncture or burn the product or accessories.
- Please recycle and dispose of the RUNHOOD Portable Power Station according to local regulations.
- When using or disposing of the RUNHOOD Portable Power Station, please pay attention to safety.
- Children and disabled individuals should operate this device under supervision.
- Improper use of this product may result in fire hazards, leading to property damage or personal injuries. This product can only be used according to safety guidelines.

PRODUCT USE

- Do not expose the RUNHOOD Portable Power Station to liquids or environmental conditions as rain, snow, or hail.
- Do not immerse the RUNHOOD Portable Power Station in water. If this product becomes wet or submerged, chemical breakdown of the battery may lead to combustion. In such a case, please contact our service department for assistance.
- Only the RUNHOOD battery is recommended for this product. RUNHOOD POWER INC. assumes no responsibility for any damage caused by using non-RUNHOOD batteries on the part of the customer.
- The discharging temperature for the Energy Bar EB324 is in the range of -68 ~ 113°F/-20 ~ 45℃ and the charging temperature in the range of 32 ~ 104°F/0 ~ 40℃. Failure to meet these requirements during charging and discharging may result in danger, permanent damage to the product, or decreased performance.
- It is recommended to use this product in the range of 68 ~ 77°F/20 ~ 25℃ as the battery life after a full charge may be negatively affected by applications outside this temperature range.
- Failure of the Battery Control Board may occur when the battery is operating in strong electrostatic or electromagnetic environments. Additionally, this may further bring about serious risks during use.
- Do not puncture the product as this may result in material leakage inside the product or fire hazards.
- Avoid using the product if it is under severe impact.
- If the product is immersed in water during use, please take it out from the water immediately and place it in a safe and open place.
- Maintain a safe distance to the product until it is completely dried. Dispose of it according to the instructions in the battery handling section below. Under no circumstances shall the battery that has been submerged or immersed in water be reused.
- Should the product catch fire, it is recommended to use fire extinguishing equipment in the following order: water, sand, fire blanket, dry powder extinguisher, and carbon dioxide extinguisher.
- Do not place this product in a microwave oven or a pressurized container.
- Do not insert pins, wires, or other metal objects into the enclosure, the socket, or the control device. This may damage the equipment and threaten personal safety.

- Avoid collisions.
- Do not place heavy objects on the equipment.
- Clean the socket and surface of the Power Station to avoid wear, energy loss, and charging faults.

CHARGING

- Always use the charging cable approved by RUNHOOD POWER INC. RUNHOOD POWER INC. assumes no responsibility for any damage caused by using non-RUNHOOD approved cables on the part of the customer.
- Please place the product in an environment free from flammable materials or combustible materials for charging. Avoid leaving the Power Station unattended during charging to prevent accidents.
- After supplying power to high-power appliances for a long time, charging the Portable Power Station may not be allowed under thermal protection. In this event, cool the product down to room temperature. The ideal temperature range for charging is 71°F to 82°F (22°C to 28°C). Charing in this temperature range also extends battery life.

PRODUCT STORAGE AND TRANSPORTATION

- Keep the product out of reach by children. Should a child swallow any component of the product, seek medical care immediately.
- Before storing this product, charge the battery to at least 60% of its full capacity. Otherwise, long-term storage may damage the battery. It is recommended to charge and discharge the battery every three months.
- Do not place the product against direct sunlight or close to a heat source.
- Store the product in a dry place. Avoid placing it in areas where it may come into contact with water.
- Do not store or transport the device with glass, watches, jewelry, or other metal items.

BATTERY DISPOSAL

- Dispose of the battery shall be carried out only when it is completely discharged. As the battery contains hazardous chemicals, please follow local regulations regarding battery disposal and recycling.

PRODUCT MAINTENANCE

- Do not store the product at temperatures below -20°C or above 60°C.
- Should the product not to be used for an extended period, the battery life may be shortened.
- Charge and discharge the battery completely at least once in every three months to maintain battery capacity.

TRAVEL NOTICE

- Lithium batteries and devices with a capacity greater than 160Wh are not allowed on-board the air plane. Therefore, do not bring this product on-board an air plane.

■ RUNHOOD PORTABLE POWER STATION

Note: The Host Engine of the RUNHOOD Portable Power Station cannot be used alone. It must be used in tandem with the Energy Bar (EB324). Please refer to sections "DIY Schemes" and "Charging Methods" for instructions on DIY combination.

◆ INTRODUCTION TO MODULES

✧ HOST ENGINE 1200 (HE1200-US)

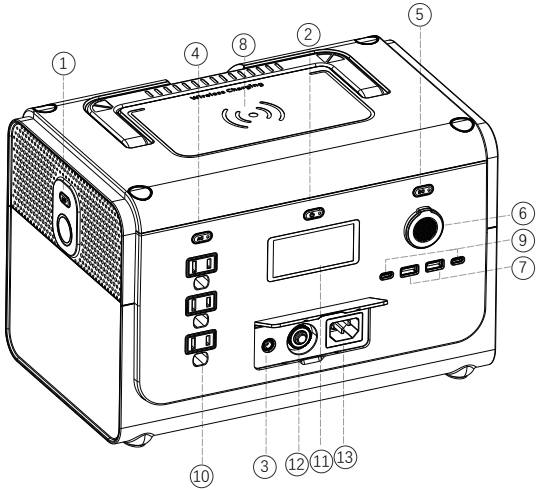

① LED FLASH LIGHT
② MAIN POWER SWITCH ON/OFF
③ DC INPUT: THE POWER ADAPTER/THE CAR CHARGING CABLE WITH A 6530 CONNECTOR /THE PV CHARGING CABLE
④ AC ON/OFF
⑤ DC ON/OFF
⑥ THE CAR CHARGING PORT
⑦ USB-A * 2
⑧ THE WIRELESS CHARGING PAD
⑨ USB-C * 2
⑩ 120V AC SOCKET * 3
⑪ LCD
⑫ CHARGING OVERLOAD PROTECTION SWITCH
⑬ 120V AC INPUT

1. THE LED FLASH LIGHT

There are three modes of light emission from the LED flash light as: strong, weak, and S.O.S. signal flashing. Press the button once to emit the strong light. Press the button for a second time to emit the weak light. Press the button for a third time to emit the S.O.S. signal. Press the button for a fourth time to turn off the LED flash light.

2. THE MAIN POWER ON/OFF

Press and hold the power button to turn on or turn off the RUNHOOD Portable Power Station. Press and hold for 1 second to turn it on; Press and hold for 3 seconds to turn it off. When the RUNHOOD Power Station is turned on, the LCD screen lights up. Press the power button, adjust the brightness of the LCD back light, and keep the RUNHOOD Power Station running. If the RUNHOOD Power Station becomes idle for 5 minutes, the brightness of the back light for the LCD is to be tuned down. If the Portable Power Station becomes idle for more than 20 minutes (idle means that there is no charging or discharging), the RUNHOOD Portable Power Station automatically turns off.

3. DC INPUT: THE POWER ADAPTER/THE CAR CHARGING CABLE WITH A 6530 CONNECTOR /THE SOLAR PANEL CHARGING CABLE

With the DC6530 connector as the DC input port, there are three charging methods for HE1200-US: charging with the adapter of the RUNHOOD Power Station, charging with the car charging cable with a 6530 connector, and charging with the PV charging cable. It supports parallel connection of PV panels. To protect the system, the DC input limits the input power to a maximum of 200W. It supports input of 12V/24V at a maximum of 10A from a car charging port. (Ensure that the engine is started to avoid battery depletion).

4.AC ON/OFF

Press the AC ON/OFF button to turn on or turn off the AC power output from the RUNHOOD Portable Power Station. When the AC output is powered on,both the indicator in the AC ON/OFF button and the "AC" icon in the LCD will be illuminated. When the AC output is powered off, both the indicator in the AC ON/OFF button and the "AC" icon in the LCD will not be illuminated. When the energy in the Portable Power Station decreases to a level of 0%, the AC output will be cut off. Accordingly, the AC indicator and the "AC" icon in the LDC will not be illuminated. When the energy in the Portable Power Station increases to a level over 2%, the AC output returns to normal. In the event of an overload, although the AC output stops working, the AC indicator will remain lit. At the same time, the "AC" icon and the "OVERLOAD" icon on the LCD display will flash together with a warning beep to remind you that the power source is being protected. Press the AC ON/OFF button to reset.

5.DC ON/OFF

Press the DC ON/OFF button to turn on or turn off the DC output from the RUNHOOD Power Station. The corresponding indicator is illuminated accordingly. This button has the control over the car charging output port, one wireless charging pad, two USB-C output ports, and two USB-A output ports of the RUNHOOD Power Station. When the adjacent USB-A ports and USB-C ports are used simultaneously, the output voltage becomes 5V. When the overload indicator and DC indicator (or the USB-A indicator or the car charging port indicator) flash simultaneously with the buzzing, it means that the relevant output is cut off. Please disconnect the Power System and press the DC ON/OFF button to reset. When the remaining energy of the Power Station decreases to a level below 2%, the DC output is cut off. If the DC ON/OFF is pressed, the DC output remains failure. The buzzer then alarms three times. In this case, it is necessary to charge the Power Station. If the energy of the Power Station exceeds a level over 2%, it will return to normal.

6.THE ON-BOARD CAR CHARGING PORT

The on-board car charging port supports a maximum output current of 10A and can be used for general equipment on-board. It can be used to charge the 12V lead-acid battery in the car (It must be operated under the guidance of a professional). This is not a feature that can help you to start a successful ignition immediately. However, it helps to charge the lead-acid battery in the car to a certain level, making it convenient for the car to start a successful ignition with the battery. The actual charging time depends on the real-time status of the car.

7.USB-A QC 3.0

It can be used to charge various devices, such as smart phones, tablets, cameras, speakers, and other devices that can be charged through USB ports, with a maximum output power of 28W per port (for devices that support the QC 3.0 charging protocol).

8.WIRELESS CHARGING PAD

It can be used to charge mobile phones and other devices suitable for wireless charging with a maximum power of 15W (The actual charging power depends on the device).

9.USB-C PD3.0 100W

It can be used to charge devices including laptops, tablets, smart phones, and other devices with USB-C ports, with a maximum power of 100W per port (for devices that support the PD3.0 charging protocol).

10.120V AC sockets

Three sockets supplying 120V pure sine wave AC power are designed to provide your devices with a maximum rated power output of 1200W. This product does not support devices with power rates greater than this value. Please check and confirm before use of this product to avoid property damages and personal injuries.

11.LCD

This display is used to indicate various working status of the product.

11.1 AN INTRODUCTION TO THE CONTENT OF THE LCD

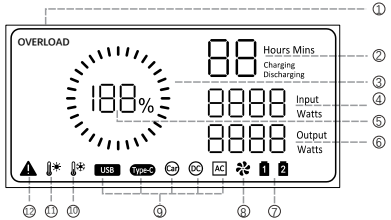

① OVERLOAD ALARM

This display is used to indicate various working status of the product. Please refer to Section 11.2.

② TIME REMAINING FOR CHARGING AND DISCHARGING

This number represents the time remaining for charging/discharging based on the current working status of HE1200-US in minutes or hours. The time remaining for charging is displayed during charging. Similarly, the time remaining for discharging is displayed during discharging. When the Power Station is engaged in charging and discharging simultaneously, the time remaining for discharging is displayed.

③ BATTERY LEVEL INDICATOR

The remaining battery level is displayed. The icon rotates during charging.

④ REAL TIME INPUT POWER

The input power of HE1200-US is displayed.

⑤ PERCENTAGE OF REMAINING POWER

The percentage of remaining power is displayed.

⑥ REAL TIME OUTPUT

The real time output power of HE1200-US is displayed. The output power value flashes when the discharging current exceeds 90% of the value allowed.

⑦ ENERGY BARS AVAILABLE

When the Energy Bar EB324 is installed, the battery icon displayed on the HE1200-US shows that the EB324 has been installed normally and is engaged in working.

⑧ THE FAN INDICATOR

The rotation of the fan icon indicates that the fan is in normal working status.

⑨ INDICATOR OF WORKING STATUS OF THE PORT

Working status of the USB-A port, the USB-C port, the car charging port, the DC port, and the AC port are displayed.

⑩ LOW TEMPERATURE ALARM

A low temperature alarm icon appears on the display, indicating that the temperature of HE1200-US is too low. In this case, charging or discharging is prohibited. Please place the product in a place with a normal room temperature and wait until it returns to operating temperature.

⑪ HIGH TEMPERATURE ALARM

When the temperature of HE1200-US is too high, a high temperature alarm icon appears on the display, indicating that the product temperature is too high. In this case, charging or discharging is prohibited. Before using, cool the product down to the normal working temperature.

⑫ MAIN FAULTS

When a major malfunction arises in the BMS, the battery, the main control board, the inverter, or the internal communication, an exclamation mark appears on the display.

11.2 ALARM INFORMATION AND DESCRIPTION

Various icon combinations displayed in the RUNHOOD Power Station suggests the following alarm messages respectively.

Icons	Alarm messages	Operating instructions
USB OVERLOAD	USB-A overload	The USB-A icon and the OVERLOAD icon flash simultaneously with the buzzing. In this event, disconnect the device and press the DC ON/OFF button to reset.
Type-C OVERLOAD	USB-C overload	The USB-C icon and the OVERLOAD icon flash simultaneously with the buzzing. In this event, the Power Station automatically resets after removing the load.

Car OVERLOAD	Car charging port overload	The Car icon and the OVERLOAD icon flash simultaneously with the buzzing. In this event, disconnect the device and press the DC ON/OFF button to reset.
DC OVERLOAD	Wireless charging port overload	The DC icon and the OVERLOAD icon flash simultaneously with the buzzing. In this event, disconnect the device and press the DC ON/OFF button to reset.
AC OVERLOAD	Inverter output overload	The AC icon and the OVERLOAD icon flash simultaneously with the buzzing. In this event, press the AC ON/OFF button to reset.
	High temperature	The high temperature icon displayed together with the buzzing suggests that the temperature of the battery is too high. In this event, disconnect the device. The Power Station consequently stops charging or discharging. Place the product in a well-ventilated area and wait for the equipment to cool down for automatic reset. If the Power Station is not yet reset properly, please contact our product experts via email: service@runhoodpower.com

	Low temperature	The low temperature icon displayed together with the buzzing at the same time suggests that the temperature is too low. The battery resultantly cannot function. In this event, please disconnect the device previously connected. When the low temperature icon flashes and the buzzer alarms at an increasingly higher frequency, the Power Station stops all charging and discharging. After the ambient temperature of the Power Station returns to its normal operating temperature range, the Power Station automatically resets. If the Power Station is not yet reset properly, please contact our product experts via email: service@runhoodpower.com.
	Major faults	When this icon is displayed, it indicates that a major fault is arising from the device. First, check if there is any strong electrostatic or magnetic field in the operating environment for the Power Station, then restart the Power Station. If the Power Station is not yet reset properly, please contact our product experts via email: service@runhoodpower.com.
	Fan warning	If the fan icon is displayed without not rotating, check if the fan is blocked. Before using it again, turn off the device and clean the device carefully. Use a vacuum cleaner to clean around all vents. If the Power Station cannot work properly, please contact our product experts via email: service@runhoodpower.com.

1 2	Battery warning	If two battery icons are displayed at the same time, it indicates that the system has two batteries working simultaneously. If only one battery icon is displayed and the other is not displayed or flashing, (It does not indicate a state of a system fault. A continuous charging and discharging would release this state.) it means that only one battery is working and the system would reduce the maximum output power.
	Buzzer reminder	The system has a buzzer reminder for Low Battery Warning. When the energy is below 5% of its full capacity, the buzzer rings periodically. In this event, the output can be turned off with the power switch. Additionally, the Power Station can also be charged. Fault Alarm Level One: The buzzer sounds for 0.1 second in every 2 seconds. It only reports faults when the system is still working normally. The buzzer can be turned off with the power switch. Fault Alarm Level Two: The buzzer sounds for 0.1 second in every 0.2 second. The system resultantly stops all charging and discharging.

12. CHARGING OVERLOAD PROTECTION SWITCH

When the input current remains greater than 20A during charging, protection will be activated onto the AC charging port (as indicated by the button popping out). After confirming that the equipment is not faulty, press the protection switch to reset and consequently resume charging.

13. 120V AC INPUT:

Connect the AC charging cable to the universal clover-shaped port and the other end to the AC power supply. This product also features a UPS function, which means that you can plug it into AC socket on the wall and continue to use the AC socket of this product. When the power grid suddenly fails, power supply from the AC socket of this product can be automatically switched to the battery power mode within 20ms, continuing to protect your work. (This function is not a professional-level UPS function and does not support 0ms switching. Please do not connect it to devices with high requirements for Uninterrupted Power Supply. You can also confirm its applicability after multiple tests for compatibility as in application scenario for data servers and workstations).

Model	HE1200-US
Net weight	Approximately 4.9 kg
Size	32 * 20 * 21cm
Capacity	Maximum 648Wh
Input	The Solar panel supports a maximum of 15V-23V 10A and MPPT.
	Power adapter 180W
	The maximum AC input power is 400W (120V 60Hz)
	Car charging port with a 6530 connector 12V 10A 120W
Fast charging	Charging with AC input
AC output	3 * Pure sine wave AC output 120V 60Hz rated 1200W (peak value 2400W)
DC output	2 * USB-A with a maximum power for each: 28W (5V DC/3A, 9V DC/3A, 12V DC/2.4A)
	2 * USB-C with a maximum power for each: 100W (5V DC/3A, 9V DC/3A, 15V DC/3A, 20V DC/5A))
	1 * Wireless charging pad 5/10/15W
	1 * Car charging port 12V 10A maximum 120W
Discharging temperature	-68~113°F / -20~45°C
Charging temperature	32 ~ 104°F / 0 ~ 40°C

HE1200-US specifications

✧ AC ENGINE (AE80)

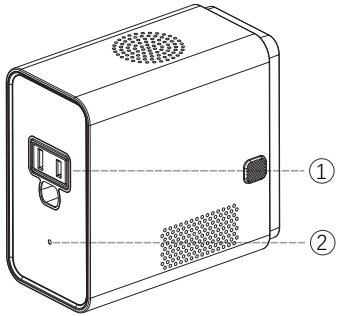

① AC SOCKET

② DISPLAY OF WORKING STATUS

1. THE AC POWER SOCKET

It supports appliances with a rated power of 80W or less. This interface does not support all appliances with a rated power exceeding 80W. Please confirm whether the device is applicable before using to avoid negative effects.

2. WORKING STATUS INDICATION

The white indicator: normal; Output 120V.
The red indicator: abnormal; Output 120V failure.

Model	AE80
Net weight	0.72 lbs./approximately 0.33 kilograms
Size	4.3 * 2.3 * 4.1 inches/11 * 5.7 * 10.3 centimeters
Output	Pure sine wave 120V AC (60Hz), 80W (peak 160W)
Discharging temperature	-68~113°F/-20-45°C

AE80 specifications

✧ USB ENGINE (UE256)

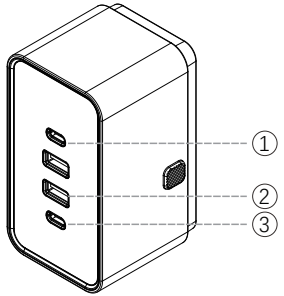

① USB-C PD 100W input/output

② USB-A (* 2) QC3.0 28W output

③ USB-C PD 100W output

1. USB-C PD 100W INPUT/OUTPUT

Input: The USB-C port supports 100W input.
Output: The USB-C port can be used to charge devices including laptops, tablets, smart phones, and any other devices with USB-C ports.

2. USB-A (* 2) QC 3.0 28W OUTPUT

The USB-A port can be used to charge devices including smart phones, tablets, speakers, and any other devices with USB-A ports.

3. USB-C PD 100W OUTPUT

Output: The USB-C port can be used to charge devices including laptops, smart phones, tablets, and any other devices through the USB-C port.

Model	UE256
Net weight	0.49 lbs./approximately 0.22 kilograms
Size	2.4 * 2.3 * 4.1 inches/6 * 5.7 * 10.3 centimeters
Input	1 * USB-C PD maximum 100W (5V DC/3A, 9V DC/3A, 15V DC/3A, 20V DC/5A)
Output (total power 256W)	2 * USB-C PD maximum 100W (5V DC/3A, 9V DC3A, 15V DC/3A, 20V DC/5A) with a maximum total power of 200W.
	2 * USB-A QC3.0 with a maximum power of 28W (5V DC/3A, 9V DC/3A, 12V DC/2.4A) with a maximum total power of 56W.
Working temperature	-68-95°F/-20-35°C

UE256 specifications

✧ ENERGY BAR (EB324)

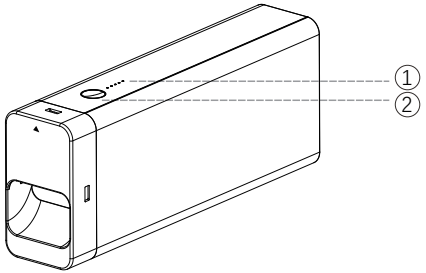

1 Battery indicator
2 ON/OFF

1. Battery indicator: Each indicator represents 20% of the energy capacity. When all 5 indicators are on, it indicates that there is 80% -100% battery power remaining. When all 5 indicators are flashing once every 1 second, it indicates that the Energy Bar 324 is abnormal.
2. ON/OFF: Press and hold the button for 1 second to turn on the power. Press and hold the button for 3 seconds to turn off the power.

Model	EB324
Net weight	3.9 lbs./approximately 1.77 kilograms
Size	10.2 * 2.3 * 4.1 inches/26 * 5.7 * 10.3 centimeters
Capacity	324Wh
Battery	Lithium ion NMC
Discharging temperature	-68-113°F/-20-45°C
Charging temperature	32-104°F/0-40°C
Product life	1000 times (80%)

EB324 specifications

◆ ACCESSORIES

✧ THE AC ADAPTER

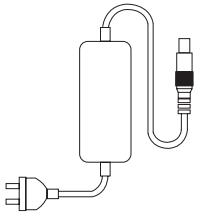

✧ THE AC CHARGING CABLE

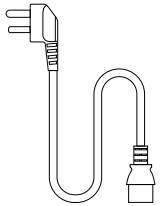

✧ THE CAR CHARGING CABLE WITH A 6530 CONNECTOR

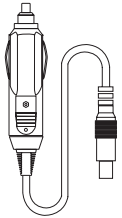

Note: Only accessories for maximum power of 12V 10A 120W are provided.

✧ THE CABLE FOR PARALLEL CONNECTION OF SOLAR PANELS

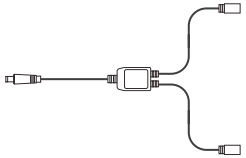

✧ THE CHARGING CABLE USED WITH SOLAR PANELS

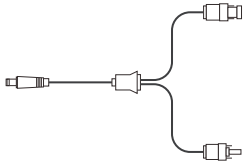

Note: The DC6530 connector is provided.

✧ THE SOLAR ADAPTER

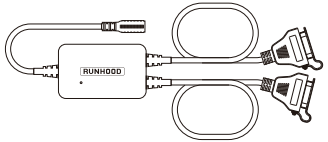

✧ THE SOLAR PANEL

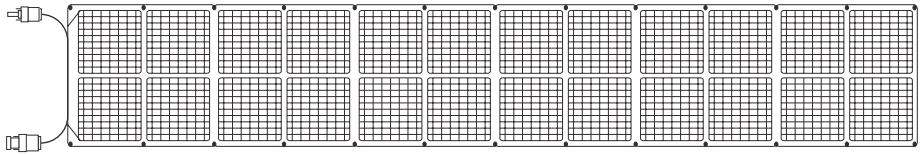

Note: RUNHOOD Seri 100W, 15V-23V is recommended.

◆ **DIY SCHEMES**

✧ 648Wh 1200W (HE1200-US + EB324 * 2)

INR22/71[(3P6S) 2P] E /-20+45/80

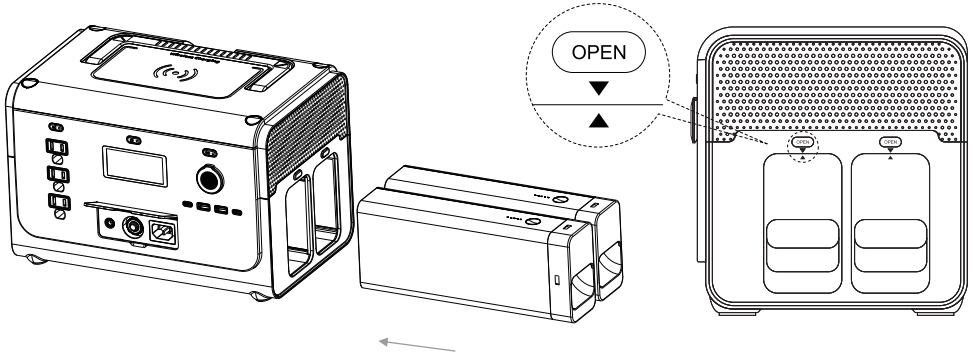

This is a 648Wh, 1200W Power Station. This scheme includes a Host Engine (HE1200) and two Energy Bars (EB324). The product is very light, weighing only 8.3 kilograms. Replacing the battery facilitates longer run time for the Power Station. With an additional pair of EB324, the Power Station can easily facilitate a capacity of 1296Wh.

✧ 324Wh 80W (AE80 + EB324)

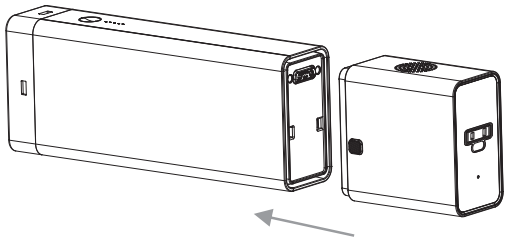

324Wh Energy Bar can facilitate 80W AC output with an "adaptive AC converter".

✧ 324Wh 256W (UE256 + EB324)

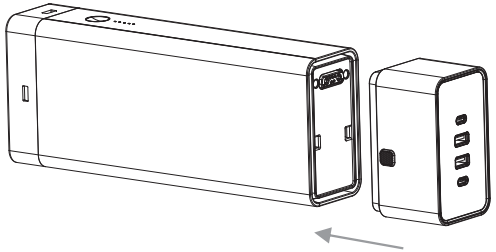

Adapted with a DC converter with 2 USB-C PD 100W output ports and 2 USB-A QC3.0 28W output ports, the Energy Bar with a capacity of 324Wh can be used to provide a maximum total output power of 256W.

◆ CHARGING METHODS

Important note: The Energy Bar is EB324. Other modules are only application interfaces, not Energy Bars. There are two ways to charge EB324: one with HE1200-US, and the other with UE256. If a EB324 is to be charged, it is necessary to connect it with HE1200-US or UE256. It is recommended to charge EB324 in pairs.

✧ GUIDANCE ON CHARGING FOR EB324 WITH HE1200-US

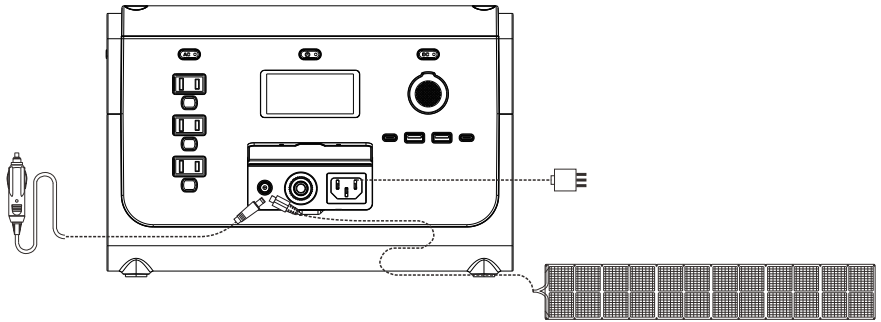

1. Insert two Energy Bars EB324 into the Host Engine HE1200-US.
2. Connect the Power Adapter/the Car Charging Cable with a 6530 connector/the solar panel to the DC input port in the Host Engine HE1200-US.
3. Quick charging: By utilizing AC, charging for EB324 can be proceeded faster.
4. Do not remove EB324 from UE256 during charging.

✧ GUIDANCE ON CHARGING FOR EB324 WITH UE256

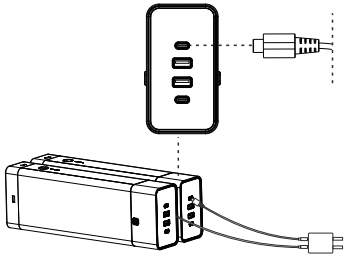

1. Connect the EB324 to the UE256.
2. Connect the charging cable to the USB-C PD 100W input/output port for charging.
3. Do not remove the EB324 from the UE256 during charging.
4. The USB-C charging cable and power adapter are not included in our product range.
   Users can purchase cables and adapters from the market according to their preferences.

✧ GUIDANCE ON CHARGING FOR EB324 WITH PHOTOVOLTAIC PANEL AND PHOTOVOLTAIC ADAPTER

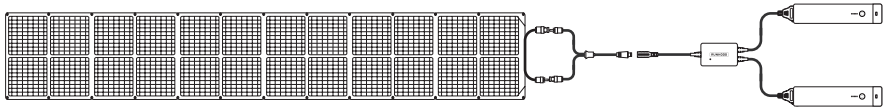

1. Open the protective cover of the solar adapter cable, connect the Energy Bar to the solar adapter correctly.
2. Connect the input port of the solar adapter to the solar panel (or adapter, car charger cable). (The parallel connection of solar panels can increase input power).
3. Charging starts automatically (If the Energy Bar is not powered on, it powers on automatically); During charging, the indicator flashes (with on for 0.5s at 1.5s intervals).
4. After the Energy Bar is fully charged, the indicator stops flashing and remains on constantly.

✧ INSTRUCTIONS FOR CONNECTING MULTIPLE SOLAR PANELS

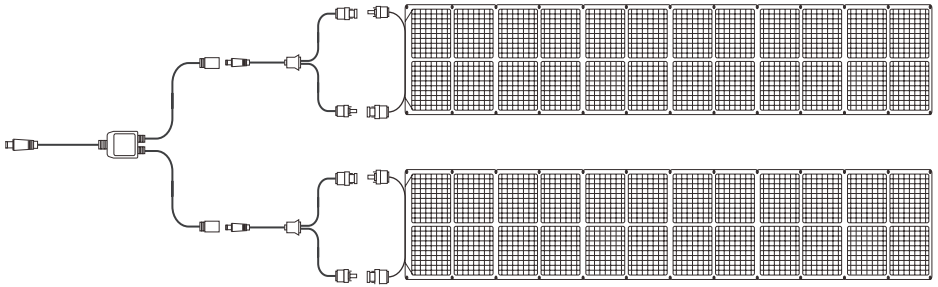

1. The DC input of HE1200-US can reach a maximum of 200W. A maximum of two Solar Panels can be used for charging.
2. Use the cable for parallel connection of Solar Panels to complete the connection of two sets of Solar Panels.
3. If HE1200-US or UE256 is to be used in charging, please refer to charging instructions above.

	This symbol represents that the product is a Class II equipment.
	This symbol represents that the product needs to be kept away from fire.
	This symbol indicates that the product needs to be kept away from water sources.
	This symbol indicates that the product must be taken to an electrical and electronic waste collection point for recycling and disposal.

Warning:
This equipment generates uses and can radiate radio frequency energy and, if not installed and used in accordance with the instructions, may cause harmful interference to radio communications. However, there
is no guarantee that interference will not occur in a particular installation. If this equipment does cause harmful interference to radio or television reception which can be determined by turning the equipment off and on, the user is encouraged to try to correct the interference by one or more of the following measures:
--Reorient or relocate the receiving antenna.
-- Increase the separation between the equipment and receiver
--Connect the equipment into an outlet on a circuit different from that to which the receiver is connected.
--Consult the dealer or an experienced radio/TV technician for help
The device has been evaluated to meet general RF exposure requirement. The device can be used in portable exposure condition without restriction.