PRODUCT SPECIFICATION FOR APPROVAL

CUSTOMER:	Shen Zhen hongyuesheng Tech.Co.,Ltd
PRODUCT NAME:	A11 coil
PART No.:	
PRODUCT SPEC:	Magnetic disc: 43.5*5.3*0.8 Double groove Coil: 0.08*24*2*10Ts/outlet 6mm Inductance: 6.3uH±10% Ordinary double-sided tape
DATE:	2022. 10. 5
VERSION:	REV 1.0

Revision	Modified Content	Principle	Date	Note
REV 1.0	First release	Xue lei	2022-08-29	

PREPARED BY	CHECKED BY	APPROVED BY

Authorized signature & company chop		

SPECIFICATION

一、Product size

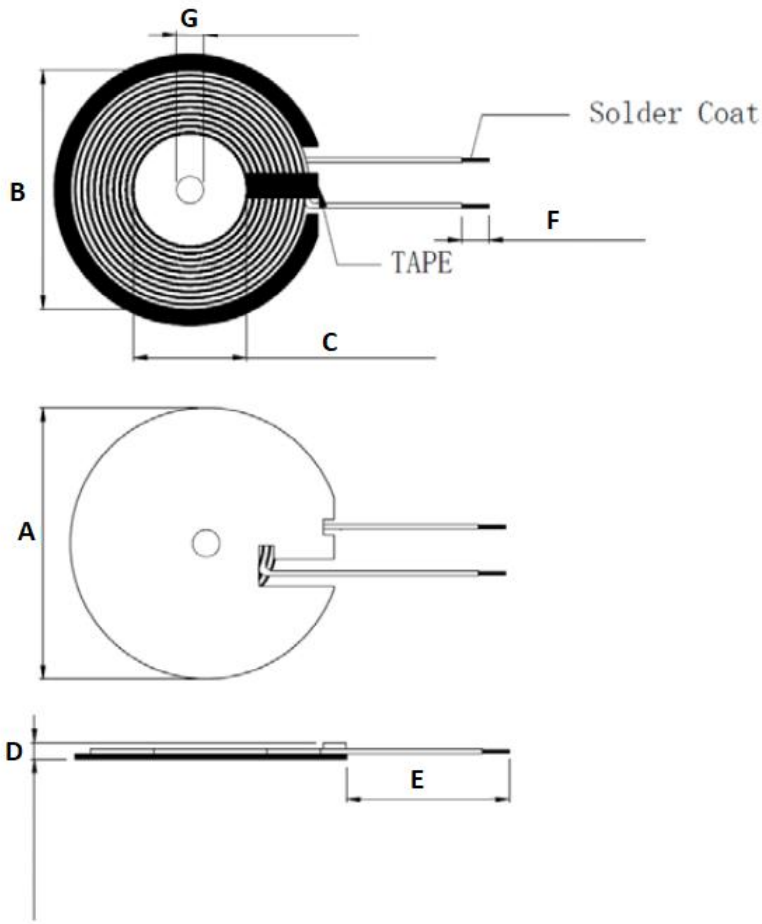

A	43.5±0.5mm
B	39±1mm
C	20.5±0.5mm
D	<1.8mm
E	25mm±3mm
F	3±2mm
G	5±0.3mm
Magnetic disc thickness	0.8±0.1mm
Disk shape	Circular double groove
Back adhesive thickness	Ordinary double-sided tape
Anti shattering black film	No

Company Name: Shenzhen Chenxing Electronic Technology Co., Ltd

Factory address: 5th floor, Building 1, Xinkecheng Science and Technology Industrial Park, No. 51 Dabao Road, Xin'an Street, Bao'an District, Shenzhen

二、SCH

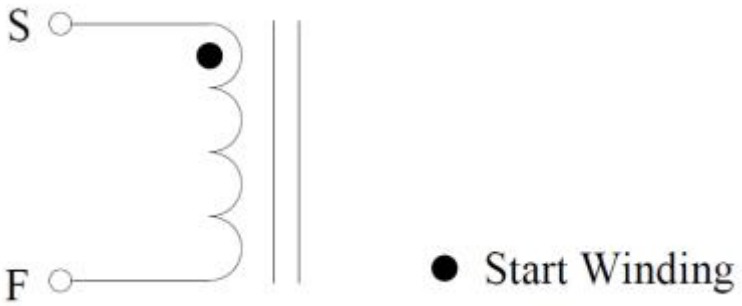

三、Winding parameters

TERMINAL		WIRE	Turns	Winding Direction
S	F	silk covered wire 0.08*24*2	10Ts	CCW

四、Electrical characteristics:

TEMPERATURE:25±10°C, RELATIVE HUMIDITY:65±20%

ITEM	TERMINAL	SPECIFICATION	TEST FREQUENCY	TEST EQUIPMENTS
IND.	S-F	6.3uH±10%	100KHz/1.0V	LCZ METER 1062B

五、Product images: